Renogy ONE

M1

VERSION A0

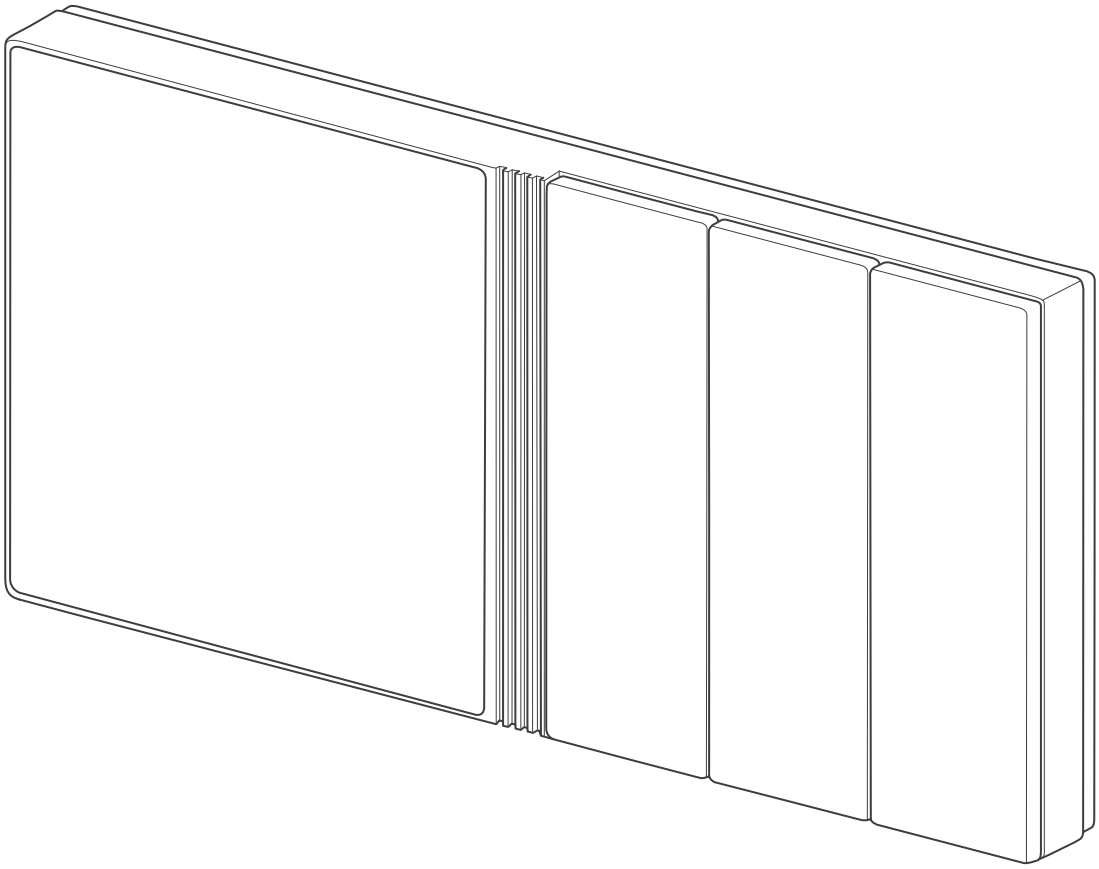

User Manual

Applicability

The user manual applies to the following product:

- Renogy ONE M1

Disclaimer

- Renogy makes no warranty as to the accuracy, sufficiency, or suitability of information in the user manual because continuous product improvements are going to be made.
- Renogy assumes no responsibility or liability for losses or damages, whether direct, indirect, consequential, or incidental, which might arise out of the use of information in the user manual.
- Renogy is not responsible or liable for the failures, damages, or injuries resulting from repair attempted by unqualified personnel or improper installation and operation.
- The illustrations in the user manual are for demonstration purposes only. Details may appear slightly different depending on product revision and market region.
- Renogy reserves the right to change the information in the user manual without notice.
- Renogy ONE collects and uses your data in accordance with the Privacy Policy.

Copyright

Renogy ONE M1 User Manual © 2022 Renogy. All rights reserved. All information in the user manual is subject to copyright and other intellectual property rights of Renogy and its licensors. The user manual may not be modified, reproduced, or copied, in whole or in part, without the prior written permissions of Renogy and its licensors.

Trademarks

The following are trademarks or registered trademarks of Renogy in the United States and other countries and regions:

RENOGY	RENOGY

All other trademarks in the user manual are the property of their respective owners and their use herein does not imply sponsorship or endorsement of their products or services. The unauthorized use of any trademark displayed in the user manual or on the product is strictly prohibited.

Date and Revision

March 2022, Revision A0

Table of Contents

Important Safety Information 05

Symbols Used 05

General Safety Information 05

Introduction 07

Introduction 07

Key Features 07

Package Contents 08

Product Overview 09

Wiring Diagram 11

Communication Diagram 12

Renogy ONE Communication Architecture 12

Energy Device Communication Connections 13

Preparation 15

Required Tools 15

Inspection 15

Mounting Location 16

Embedding 19

12V Power Cable 19

Communication Cables 19

External Load 27

Wiring 29

12V Power Cable 29

Communication Cables 30

External Load 30

Mounting 32

Activation 33
Operation 34
Wi-Fi 34
Binding 34
Add Devices/Smart Accesories 34
Power On/Off 36
Control External Loads 37
Troubleshooting 38
Frequently Asked Questions 39
Maintenance 41
Inspection 41
Cleaning 41
Storage 41
Emergency Responses 42
Fire 42
Flooding 42
Smell 42
Noise 42
Technical Support 43
Technical Specifications 44
Dimensions 45

Important Safety Information

The user manual provides important installation, operation, and maintenance instructions for Renogy ONE M1. Please read the user manual carefully before installation and operation and save it for future reference. Failure to observe the instructions or precautions in the user manual can result in electrical shock, serious injury, or death, or can damage Renogy ONE M1, potentially rendering it inoperable.

Symbols Used

The following symbols are used throughout the user manual to highlight important information:

WARNING	Indicates a potentially dangerous condition which could result in injury or death.
CAUTION	Indicates a critical procedure for safe and proper installation and operation.
NOTE	Indicates an important step or tip for optimal performance.
INFO	Indicates that more information is available in other documents relating to the subject.

General Safety Information

WARNING

- Please inspect Renogy ONE for any visible damage including cracks, dents, deformation, and other visible abnormalities before installation.
- Do not puncture, drop, crush, penetrate, shake, strike, or step on Renogy ONE.
- Do not open, dismantle, repair, tamper with, or modify the components of Renogy ONE.
- Install Renogy ONE on a vertical surface indoors.
- Do not expose Renogy ONE to direct sunlight.
- Prevent water from entering Renogy ONE.
- Keep Renogy ONE away from heating equipment.
- Do not insert foreign objects into Renogy ONE.
- For safety, please install Renogy ONE in a place out of the reach of children.
- In order to prevent electric shock and protect personal safety, the installation shall be carried out under the condition of power failure, and live operation is not allowed.
- Please wear proper protective equipment and use insulated tools during the installation or disassembly of Renogy ONE.
- Do not touch the connector contact while Renogy ONE is in operating.
- Disconnect all connectors from Renogy ONE before maintenance or cleaning.
- Do not dispose of Renogy ONE as household waste. Please comply with local, state, and

federal laws and regulations and use recycling channels as required.

- In the event of fire, please use fire extinguishers suitable for electrical equipment.
- If Renogy ONE is installed improperly on a ship, it may cause damage to the ship's corrosive agents. Please have Renogy ONE installed by a qualified (ship) electrician.

CAUTION

- Do not expose Renogy ONE to flammable or harsh chemicals or vapors.
- Ensure that there is no water source including downspouts, sprinklers, or faucets above or near Renogy ONE.
- Renogy ONE is only suitable for safe use in areas below 2,000 meters above sea level.

Introduction

Renogy ONE M1 (hereinafter referred as Renogy ONE) is an all-in-one intelligent energy monitor and smart home command center born to revolutionize how you live off the grid. The 4-inch high-definition display reliably visualizes the energy data of each Renogy device through Bluetooth or RS485 connection, enabling a better control of your power systems only at a simple glance. With a built-in Wi-Fi module, Renogy ONE can analyze errors and store data in the cloud. Thus, you can check on your system and receive troubleshooting tips wherever you are.

Renogy ONE is integrated with 3 relays to help you build a smart home. You can control up to 3 home appliances via physical switches on the panel or the DC Home app. In addition, Renogy ONE works with Smart Relay, Smart Plug, Door & Window Sensor, and Motion Sensor, based on which you can customize smart scenes to enable multiple devices in one go for enhanced comfort. If anything is unusual, Renogy ONE will keep you alert through instant notifications on your phone.

Key Features

- **All-in-one Smart Panel**

By connecting to a wide range of energy devices and smart home accessories via Bluetooth or Zigbee, Renogy ONE allows you to track energy data and manage your off-grid home through its 4-inch high-definition touch screen.

- **24/7 Energy Monitoring**

Renogy ONE collects accurate data from compatible energy devices through Bluetooth or RS485 communication cables, allowing you to keep track of energy status in one go.

- **Make Your Home Connected**

Connect a maximum of 3 home appliances (requirements for the load: < 30V DC & ≤5A) to Renogy ONE for added convenience and comfort. You can manage these home appliances separately from one place by pressing the switches next to the display or through the DC Home app.

- **Smart Scene Settings over LAN**

Renogy ONE allows you to customize smart scenes to enable multiple devices in one go. The scenes keep working even when the Renogy ONE is disconnected from the Internet.

- **Distance is not a Problem**

The Wi-Fi module uploads power data while you are off the grid, so you can seamlessly check the overall status of your off-grid power system, real-time usage of each energy device, or system errors via the DC Home app on your phone, anytime, anywhere.

Package Contents

Renogy ONE M1 × 1	Quick Guide × 1
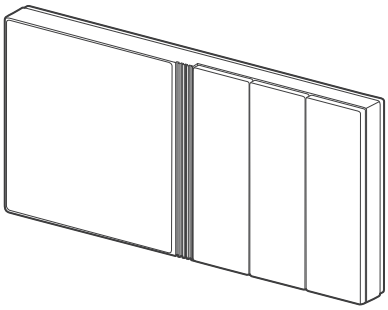	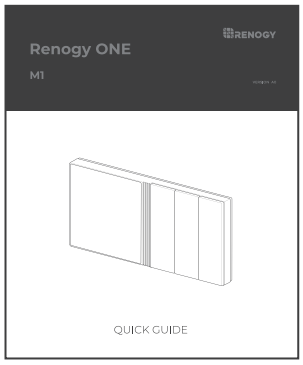

12V Power Cable (5m) × 1	M2 Screws × 4
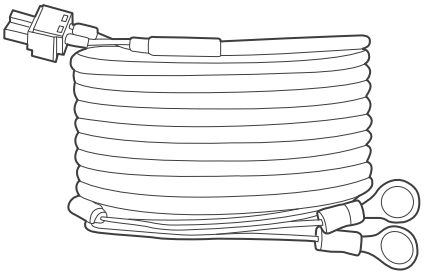	ST2 x 1.2 x 6.5 mm 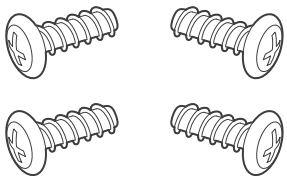

M4 Mounting Screws × 4
ST4 x 2 x 13 mm 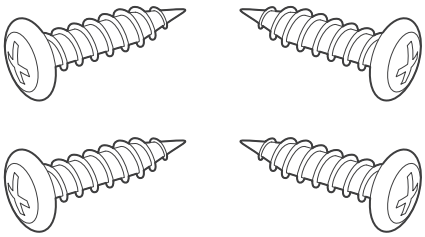

Product Overview

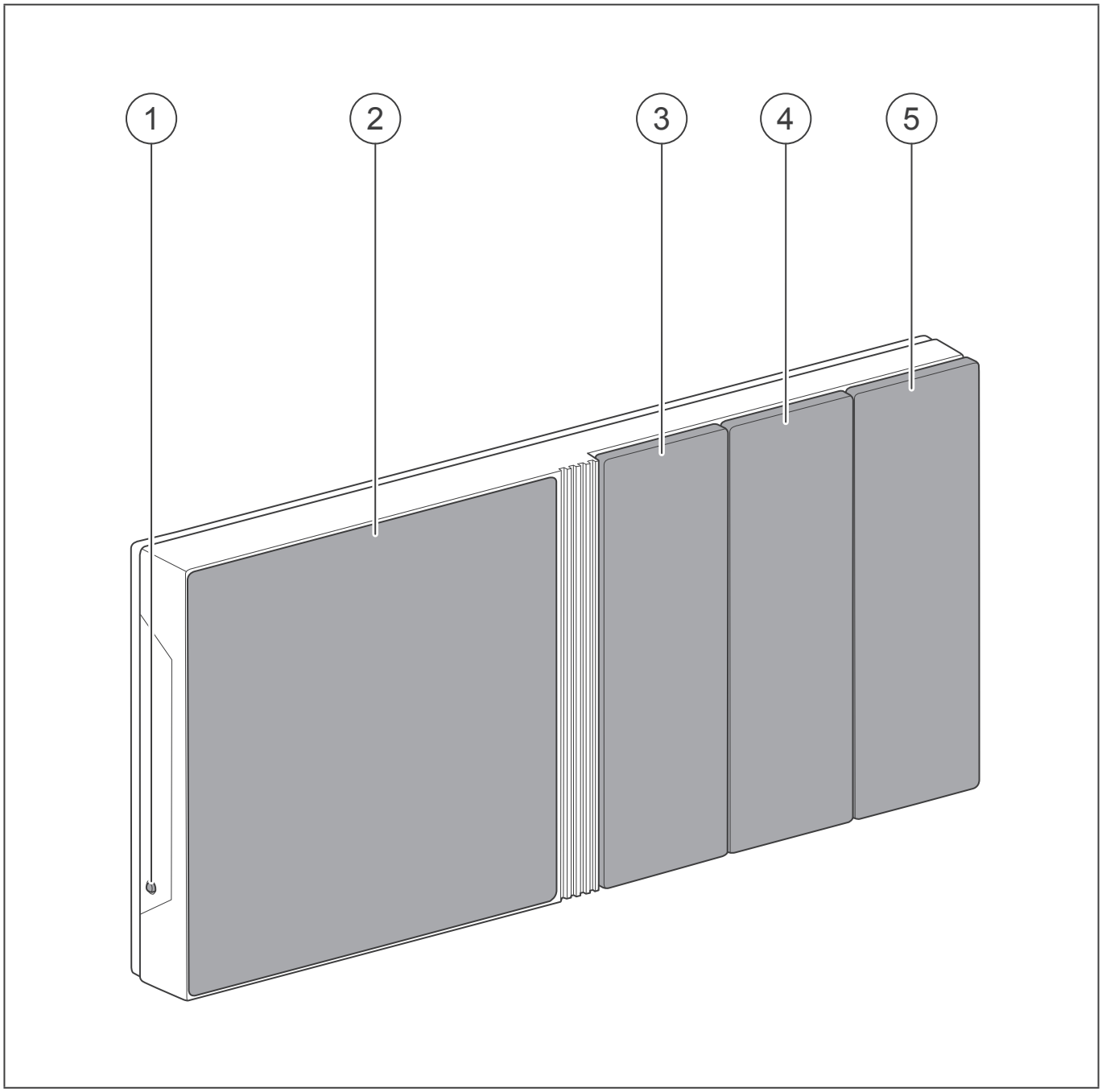

No.	Part	No.	Part
1	Power Button	4	Panel Switch 2
2	Touch Screen	5	Panel Switch 3
3	Panel Switch 1		

Product Overview

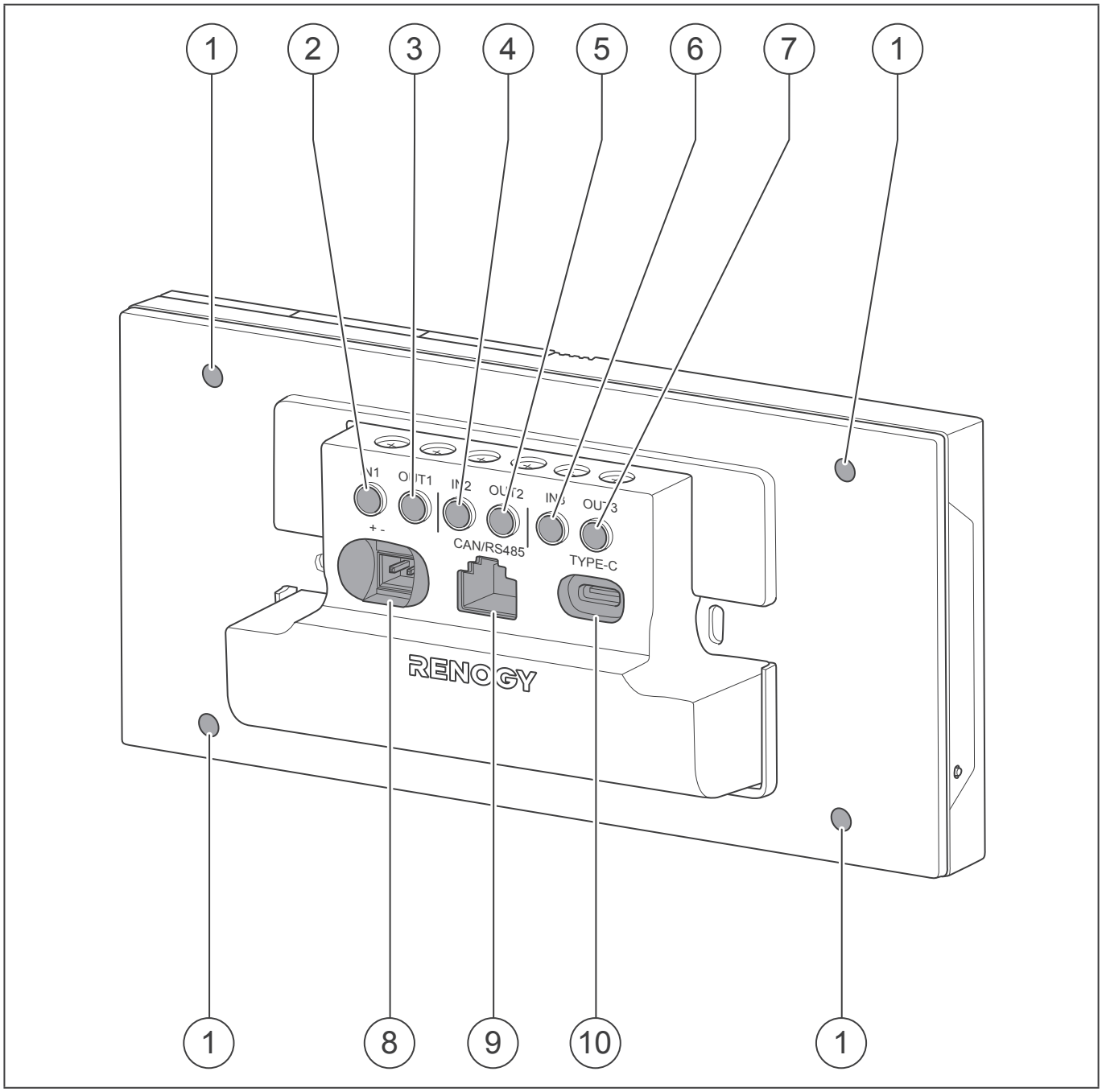

No.	Part	No.	Part
1	Mounting Holes	6	IN 3 (External Load Input Terminal)
2	IN 1 (External Load Input Terminal)	7	OUT 3 (External Load Output Terminal)
3	OUT 1 (External Load Output Terminal)	8	Power Port
4	IN 2 (External Load Input Terminal)	9	RJ45 Port
5	OUT 2 (External Load Output Terminal)	10	Alternate Power Input Port (Type-C)

Wiring Diagram

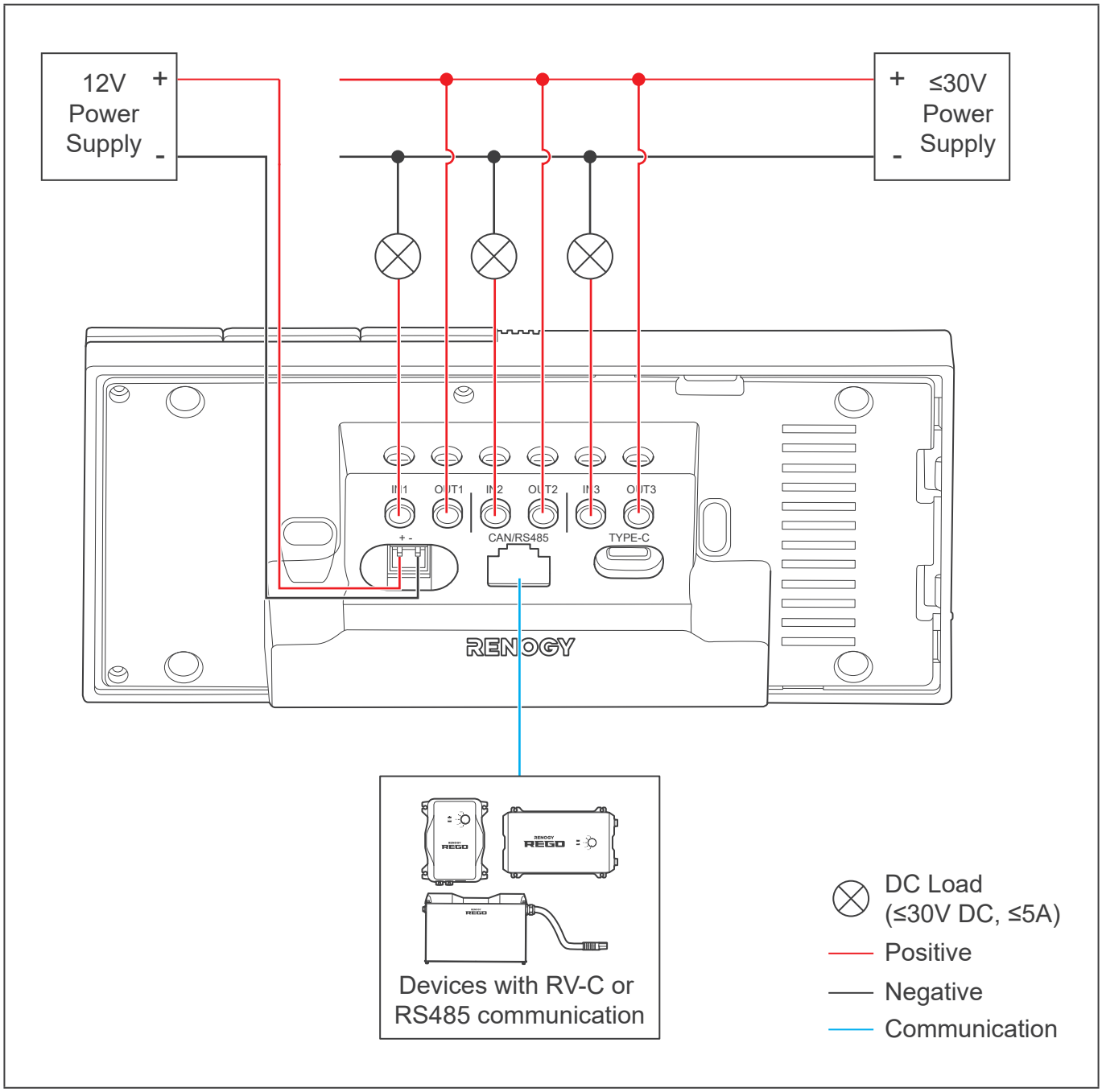

Communication Diagram

Renogy ONE Communication Architecture

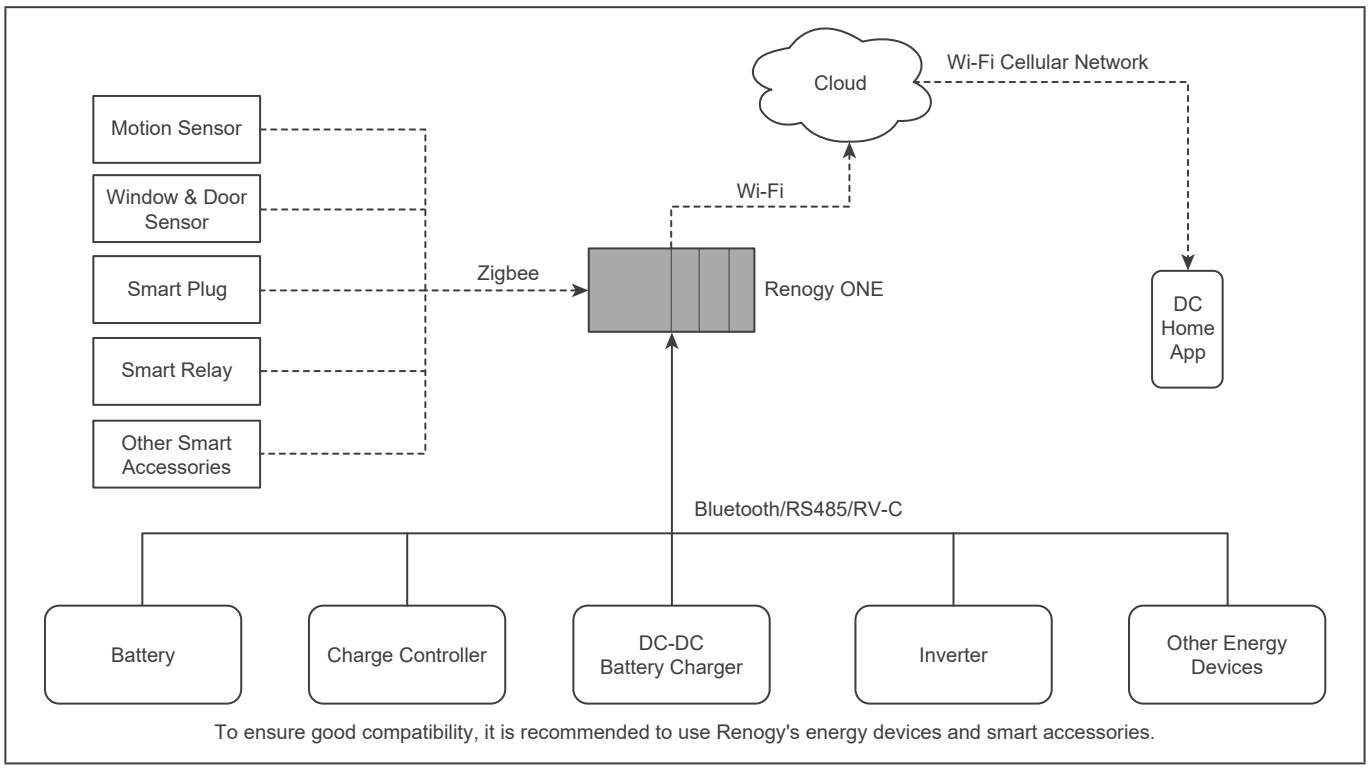

Energy Device Communication Connections

Bluetooth

1. For devices with a built-in Bluetooth module or an external Bluetooth module (Renogy BT-1 or BT-2):

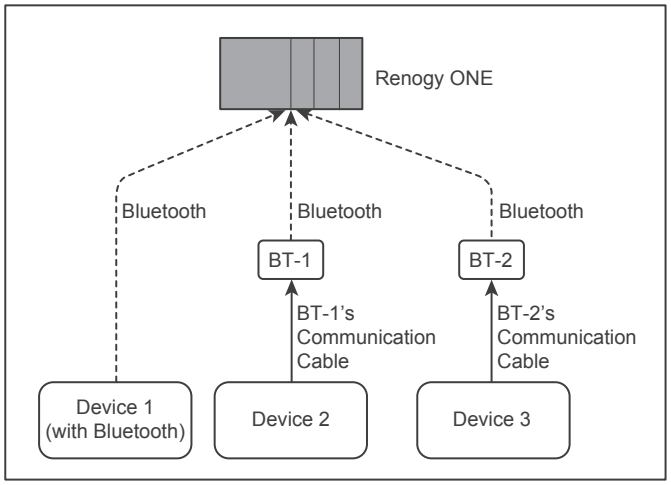

2. For devices connected to Renogy Communication Hub and BT-2:

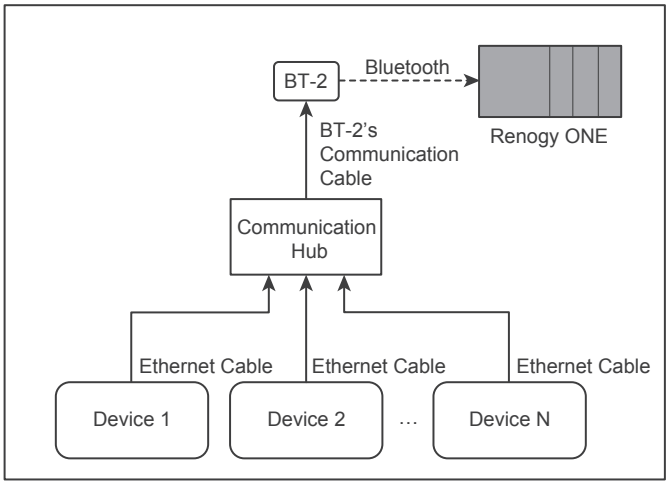

RS485 Communication

1. For a single device with RJ45 port:

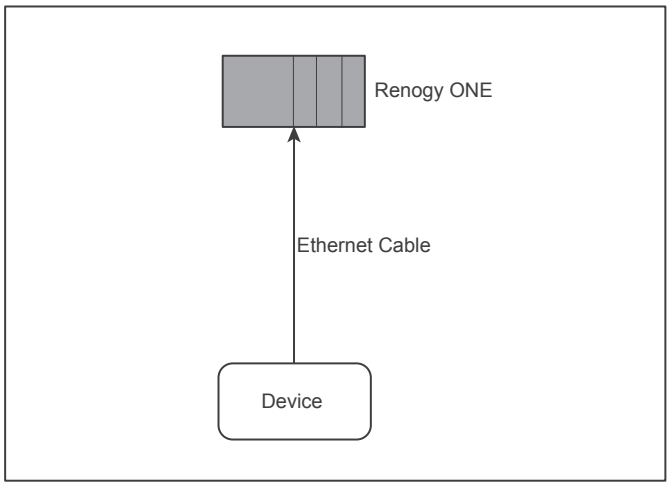

2. For devices connected to Renogy Communication Hub:

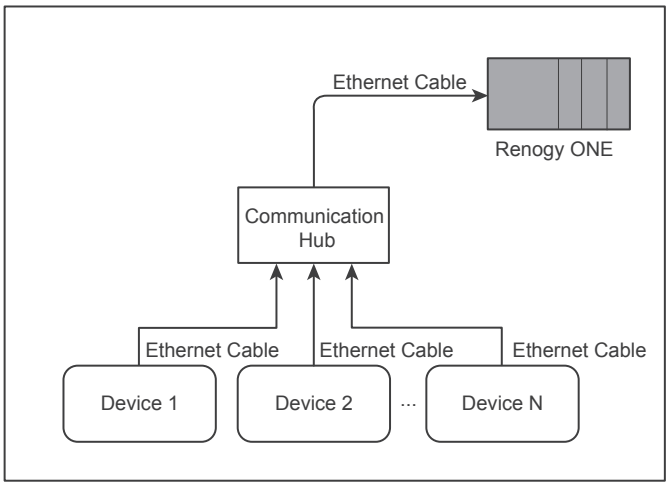

RV-C Communication

1. For REGO devices connected with RV-C daisy chain topology:

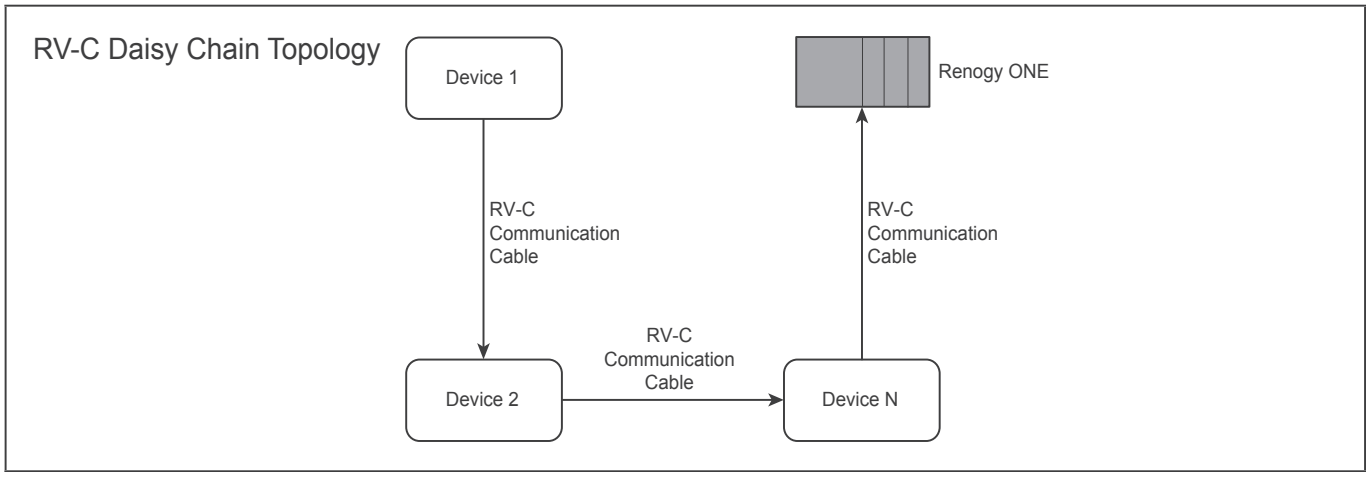

2. For REGO devices connected with RV-C backbone topology:

For backbone topology, please contact our customer service through renogy.com/contact-us/.

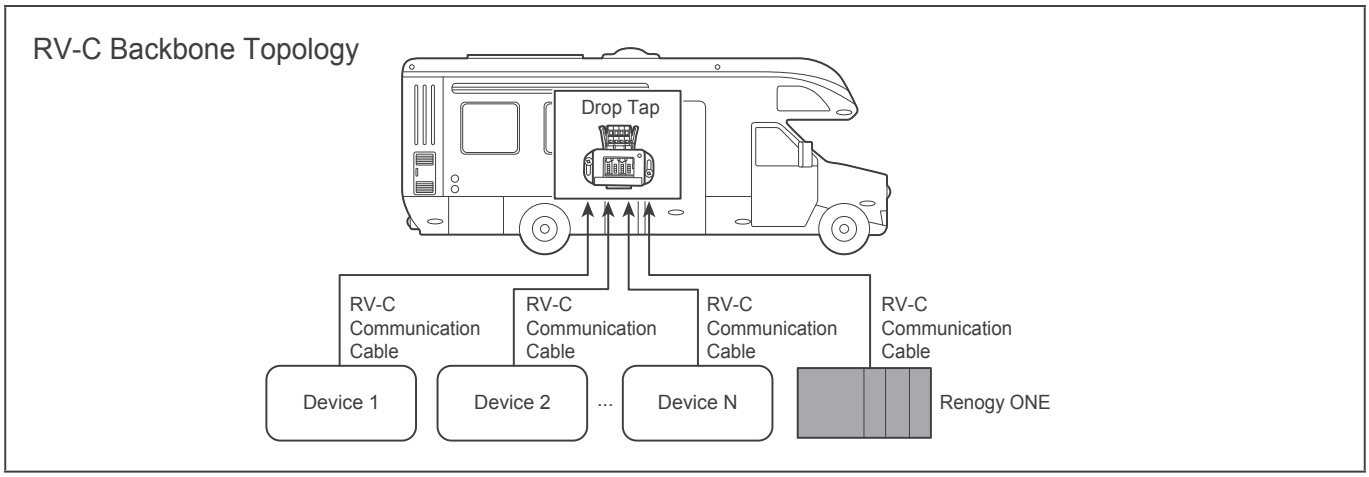

Required Tools

Phillips Screwdriver (#1)	Phillips Screwdriver (#2)
Insulation Tape	**Skill Saw**
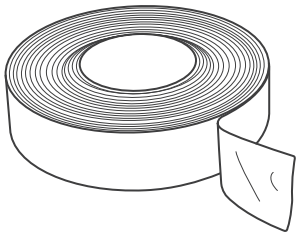	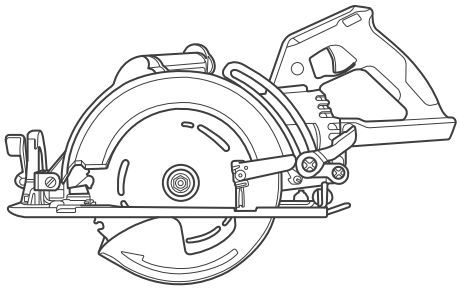

Inspection

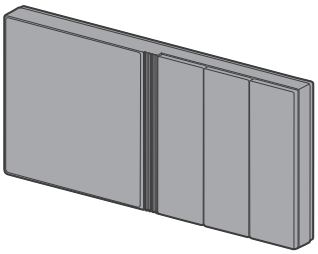

Please inspect Renogy ONE for any visible damage including cracks, dents, deformation, and other visible abnormalities before installation. All connector contacts shall be clean, dry, and free of dirt and corrosion.

WARNING

- Do not use Renogy ONE if it appears to be damaged.

Mounting Location

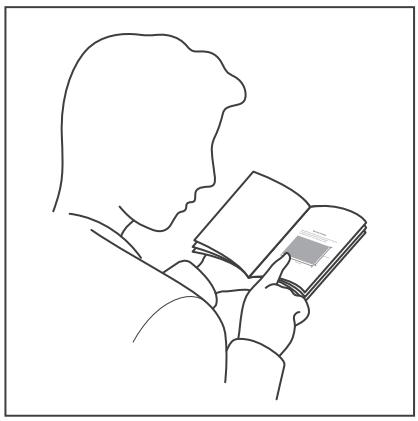

1. Tear off the mounting template in the Quick Guide of Renogy ONE. You can also draw a picture according to the size marked in the mounting template.

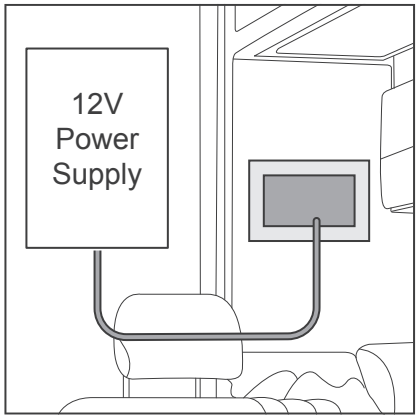

2. Tape the mounting template to the selected mounting location, and measure whether the 12V power cable is long enough to connect Renogy ONE to your DC power supply. If the auxiliary 12V power cable is not long enough for connecting Renogy ONE to your DC power supply, you can re-select a mounting position or use an extension cable (≥ 22 AWG). If you do not need to extend the 12V power cable, please go to step 5.

NOTE

- Install Renogy ONE on a vertical surface.
- Mounting Renogy ONE requires installation holes, so please make sure that you can drill holes on the mounting position.
- To ensure quality wireless communication for Renogy ONE, keep it away from metal objects at a minimum distance of 200 mm or 7.88 inch.

WARNING

- Install Renogy ONE on a vertical surface indoors protected from direct sunlight, high temperature, and water. Make sure there is good ventilation.
- Do not install Renogy ONE in a humid environment, or spill water or other liquids on it.

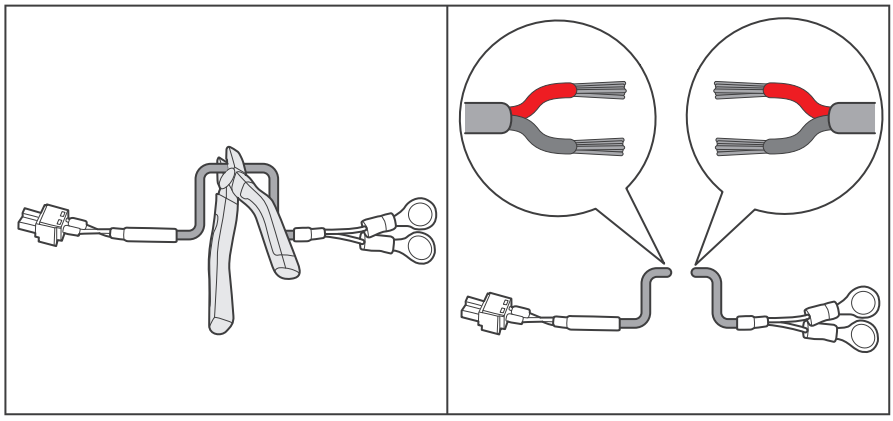

3. If you need to extend the auxiliary 12V power cable, cut it at any part of the auxiliary 12V power cable and strip off some of the insulation.

NOTE

- When extending the 12V power cable, confirm the polarity of the cable before connecting it to the auxiliary one. A reverse polarity contact will result in abnormal operations. The length of the extension cable should not exceed 10 meters (32.8 feet).

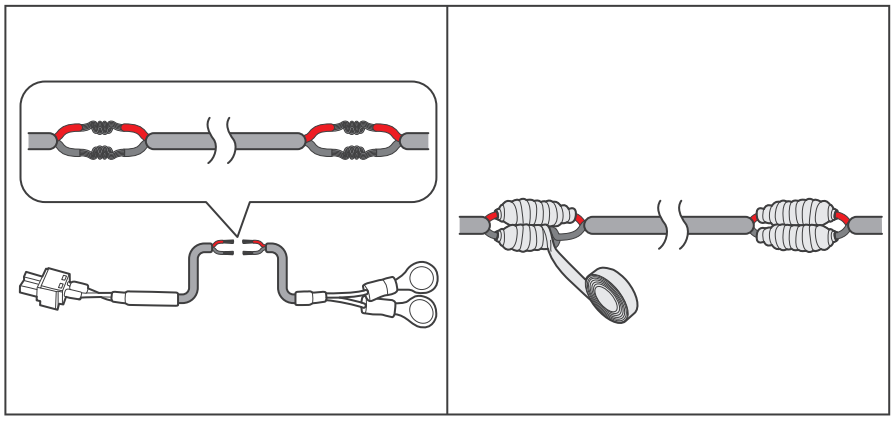

4. Strip part of the insulation off the extension cable and connect it to the cut-off point of the auxiliary 12V power supply cable and wrap the cut-off areas with the insulation tape.

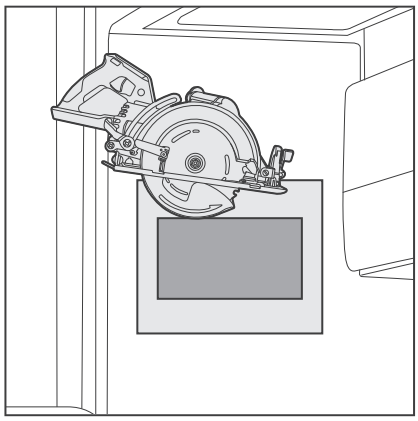

5. Use the skill saw to cut the installation hole according to the gray mark on the mounting template.

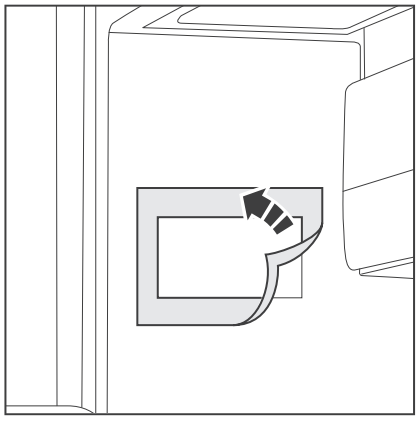

6. Tear off the mounting template.

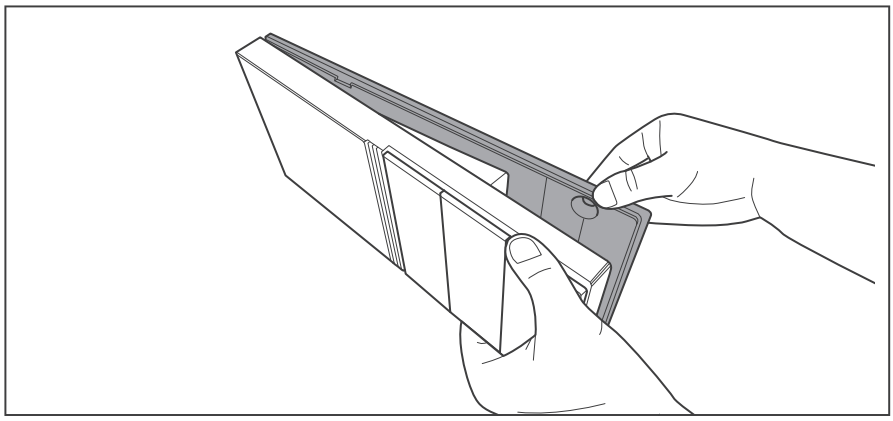

7. Remove the base cover of Renogy ONE.

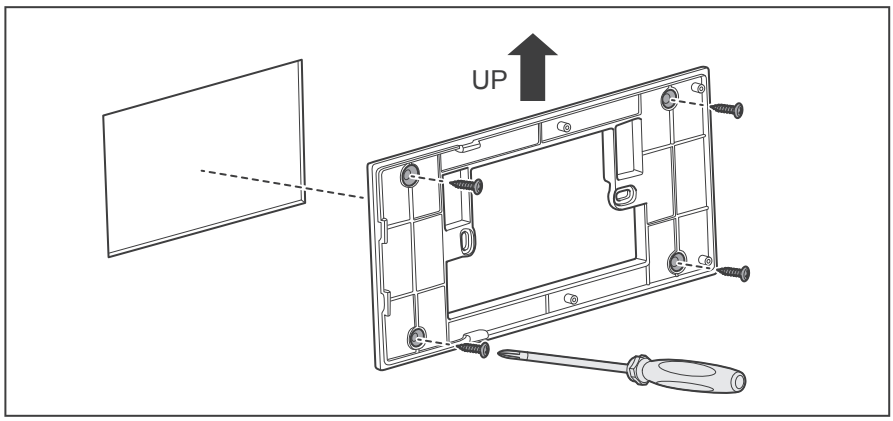

8. Put the protruding part of the base cover into the installation hole (in a direction and position as shown in Figure 1.1.7), and use a Phillips screwdriver to fasten the base cover with four M4 mounting screws through the mounting hole.

NOTE

- That screws are driven in straight into the mounting holes to ensure the base cover perfectly fits into Renogy ONE.
- Ensure that the base cover of Renogy ONE is firmly mounted to the wall to prevent it from falling off.

12V Power Cable

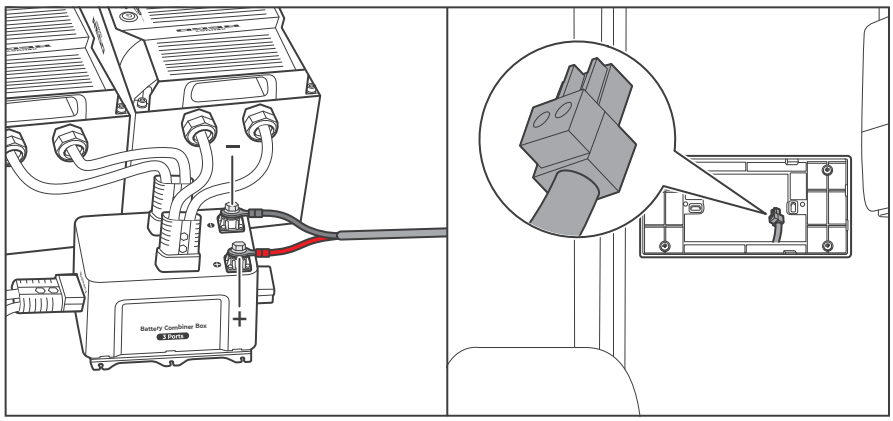

1. Connect the ring terminals of the 12V power cable to the positive and negative terminals of the DC power supply device, and reserve the connector end of the power cable in the installation hole.

CAUTION

- Illustrations in this user manual are based on scenarios where REGO 12V 400Ah Lithium Iron Phosphate Battery and REGO 3 Ports 400A Battery Combiner Box are adopted as power supplies.

WARNING

- Make sure the DC power supply is powered off before connection.
- Renogy ONE can be connected to a DC power supply of up to 16V; otherwise Renogy ONE may be damaged.
- Please confirm the polarity of the DC power supply device before connection. A reverse polarity contact will result in abnormal operations.

Communication Cables

Renogy ONE can communicate with Renogy energy devices in several ways:

1. Bluetooth wireless communication;
2. Wired communication based on RS485 protocol;
3. Wired communication based on RV-C protocol.

You can choose an appropriate communication method according to the actual situation.

For Bluetooth wireless communication, there is no need to pre-embed the communication cable. For RS485 or RV-C communication, you need to pre-embed the communication cable in the installation hole.

RS485 Communication

Recommended Accessories

Communication Cable (RJ45 Ethernet Cable)	Renogy Communication Hub (For Multiple Devices)
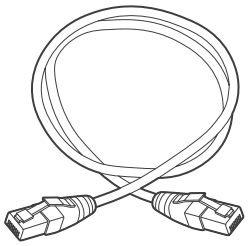	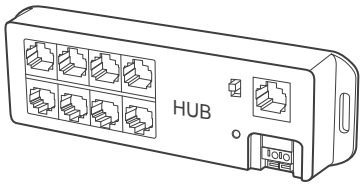

NOTE

- Please use CAT5 and higher category cables.
- Ensure that the device supports RS485 communication.
- Please select the appropriate communication cable (sold separately) according to the distance between devices. The length of the communication cable should be less than 30 meters (98.4 feet).

INFO

- Please read the user manual carefully before using Renogy Communication Hub.
- When Renogy BT-2 Bluetooth Module is connected to the main communication port of Renogy Communication Hub, the devices connected to Renogy Communication Hub will have Bluetooth capability. You can add devices to Renogy ONE via Bluetooth. For details, please refer to the Renogy Communication Hub User Manual.

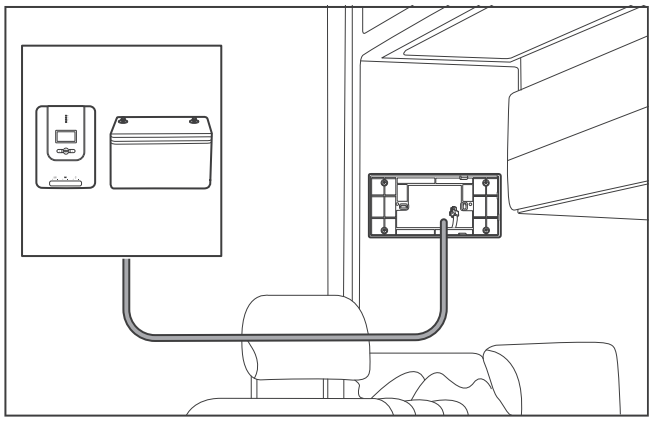

1. Measure whether the communication cable can be connected to Renogy ONE and other devices.

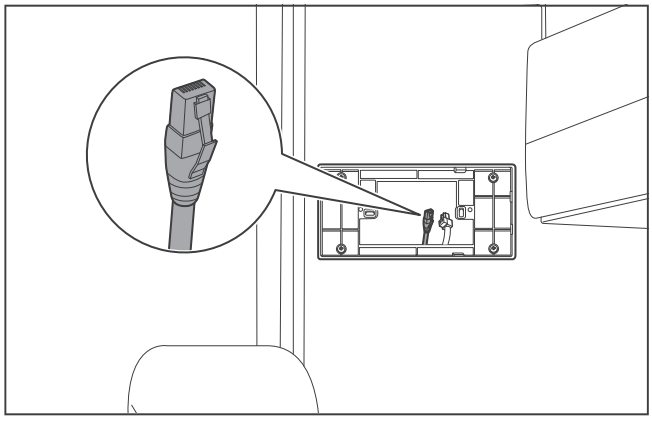

2. Pre-embed the RJ45 connector of the communication cable into the installation hole.

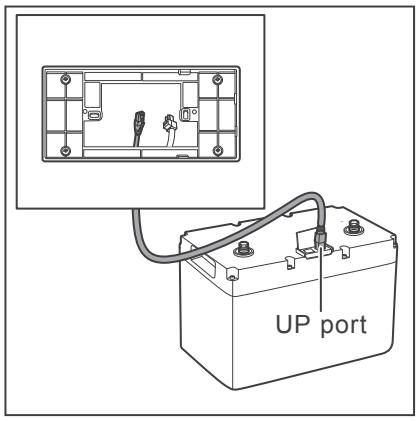

3. If there is only one device, connect the other end of the communication cable to the communication port of the specific device in use.

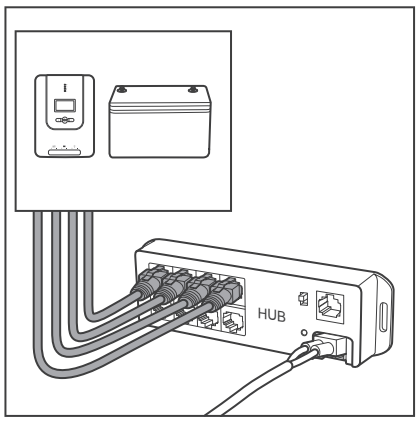

4. If there are multiple devices, connect the devices to Renogy Communication Hub.

NOTE

- Ensure that Renogy Communication Hub is connected to the power supply.
- The length of the communication cable connecting the device to Renogy Communication Hub should be less than 30 meters (98.4feet).
- If the power cable of Renogy Communication Hub is not long enough, it can be extended according to the 12V power cable extension method in **Prepare**. The length of the extension cable should not exceed 10 meters (32.8 feet).

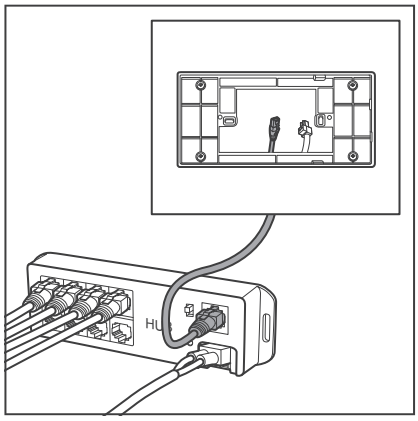

5. Connect the other end of the communication cable to the main communication port of Renogy Communication Hub.

RV-C Communication

Renogy ONE M1 can communicate with other REGO devices and monitoring devices, enabling safe operation, smart control, remote monitoring, and programmable settings.

The RV-C communication wiring varies depending on the connection network topology. Both backbone and daisy chain topologies are supported.

Backbone Topology

Some RV manufacturers have a pre-installed RV-C bus running through the RV. Please check the RV user manual and make sure that the first and last Drop Tap on the RV-C bus has a built-in 120Ω termination resistor. In this way, Renogy ONE and other REGO devices can be connected to the RV-C bus for communication with the Backbone topology.

If you need to use the backbone topology for communication connections, please contact us through renogy.com/contact-us/.

INFO

- If a RV-C bus is pre-installed in the RV, check the network wiring diagram provided by the RV manufacturer and follow the backbone topology for the RV-C communication connections.

CAUTION

- If you are unsure whether the RV-C bus has built-in 120Ω terminal resistors after reading the RV user manual, you can call the RV manufacturer.
- If there is no built-in 120Ω termination resistors on the RV-C bus, Renogy ONE and other REGO devices will not be able to communicate properly. Please use the daisy chain topology for communication connections.

When it is determined that a backbone topology can be used for communication connections, the appropriate communication cable must be selected for the connection based on the actual usage.

Recommended Accessories

RJ45 Plug to Bare Wires Drop Cable	Drop Plugs	Split Joint Pliers
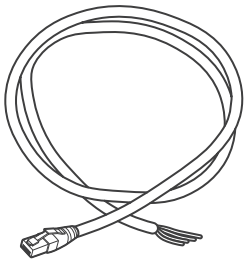	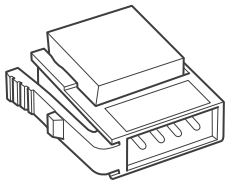	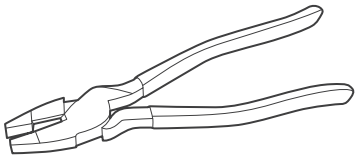

NOTE

- The lengths of the Drop Cables shall not exceed 6 meters (19.6 feet), and the total length shall not exceed 30 meters (98.4 feet).
- Different drop sockets are used on the RV-C bus by different RV manufacturers. Please select the Drop Plugs that match the drop sockets for the inter-device communication connections. If unsure about the Drop Plug selection, please check with the RV manufacturer. This user manual takes the Mini-Clamp II plug (4-pin) as an example.
- Different Drop Plugs follow different pinouts. Please crimp the Drop Plugs on the Drop Cables following the correct pinout. If unsure about the Drop Plug pinout, please check with the RV manufacturer. This user manual takes the pinout of the Mini-Clamp II plug (4-Pin) as an example.

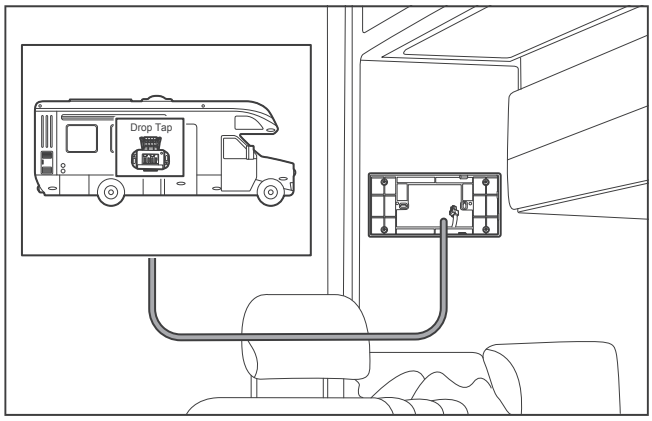

1. Measure whether the communication cable can be connected to Renogy ONE and the drop tap on the RV-C bus.

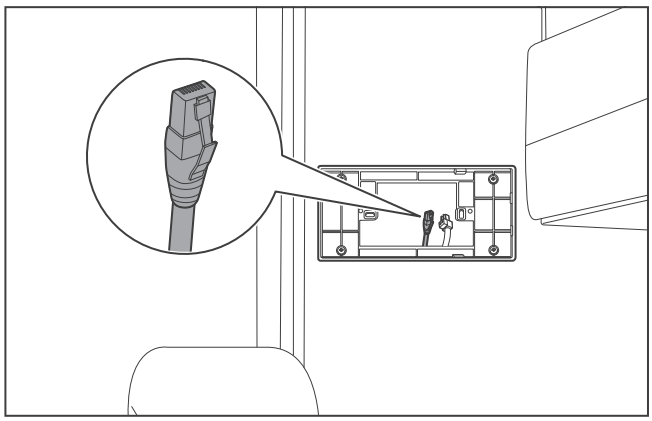

2. Pre-embed the RJ45 connector of the communication cable into the installation hole.

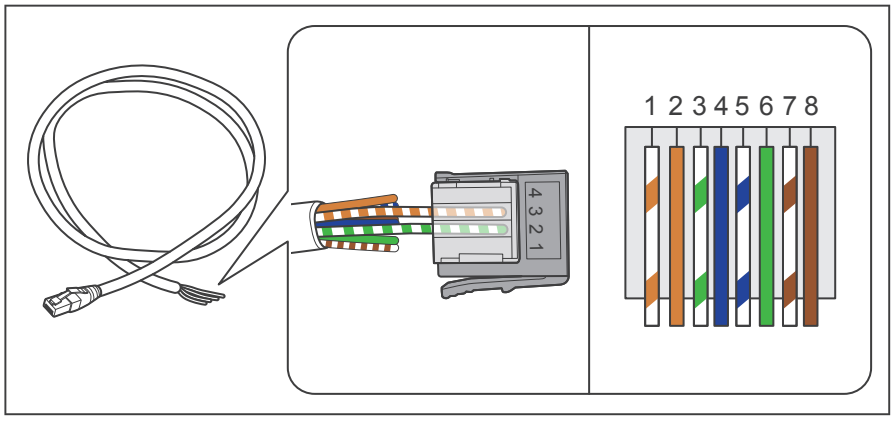

3. The white green CAN_H wire goes to pin 2 and the white orange CAN_L wire goes to pin 3. Leave pin 1 and pin 4 empty.

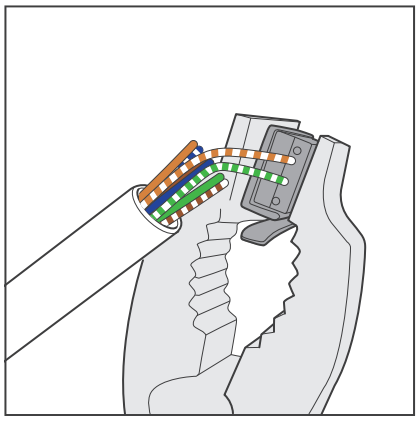

4. Squeeze the crimp areas of the Drop Plugs with the Split Joint Pliers.

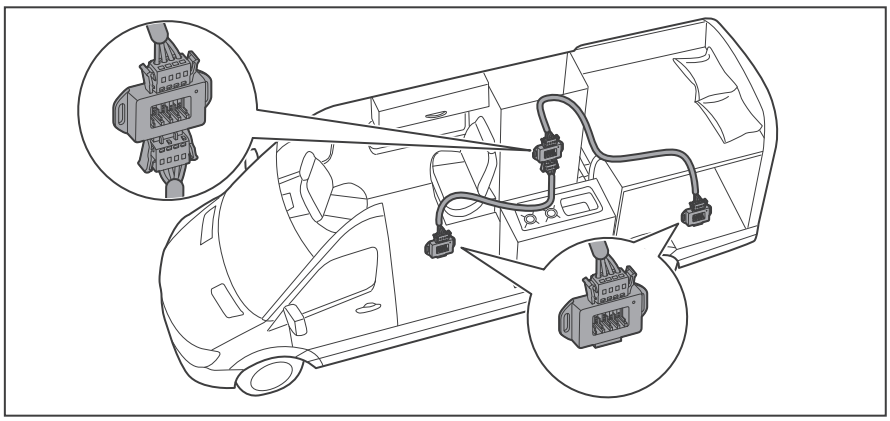

5. Locate the drop tap (not included) on the RV-C bus that is the closest to the Renogy ONE installation location. The drop taps are usually located above the entry door, in the bathroom, or under the bed in the RV.

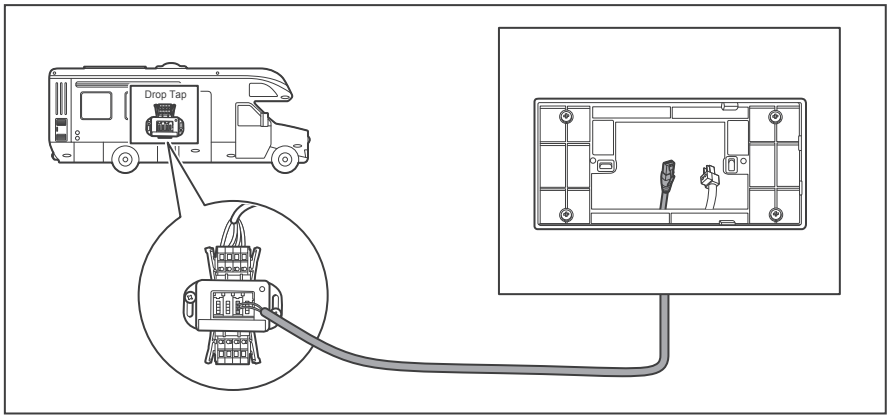

6. Connect either of the CAN Communication Ports of the Renogy ONE and other REGO devices to the drop sockets on the drop tap with the Drop Cables.

NOTE

- Different drop taps are used on the RV-C bus by different RV manufacturers. This user manual takes the 4-socket drop tap as an example.

CAUTION

- If unable to locate the drop taps, please contact the RV manufacturer for help.

Daisy Chain Topology

If an RV-C bus is not pre-installed in the RV, please follow the steps below.

Recommended Accessories

Communication Cable (LP16 Plug (7-Pin) to RJ45 Communication Adapter Cable)
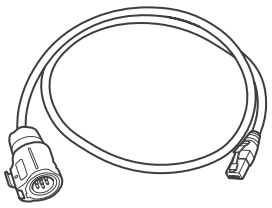

NOTE

- Please select the appropriate communication cable (sold separately) according to the distance between devices. The length of the communication cable should be less than 30 meters (98.4 feet).

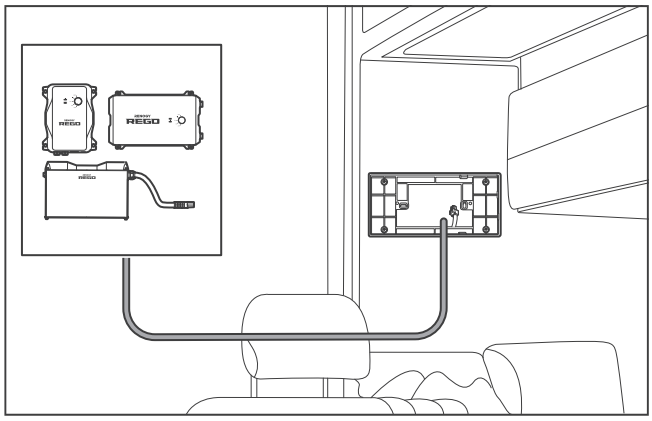

1. Measure whether the communication cable can be connected to Renogy ONE and other REGO devices.

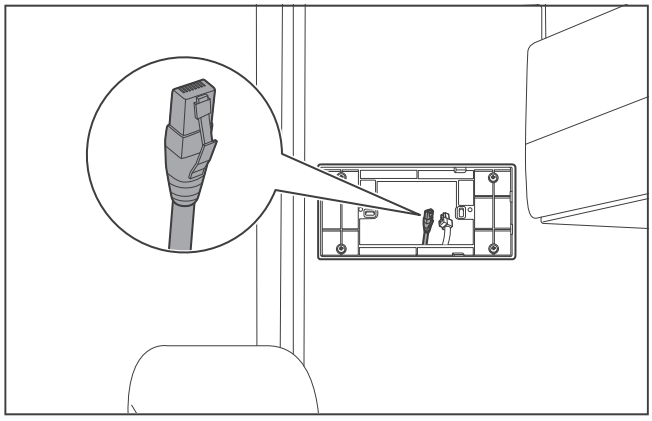

2. Pre-embed the RJ45 connector of the communication cable into the installation hole.

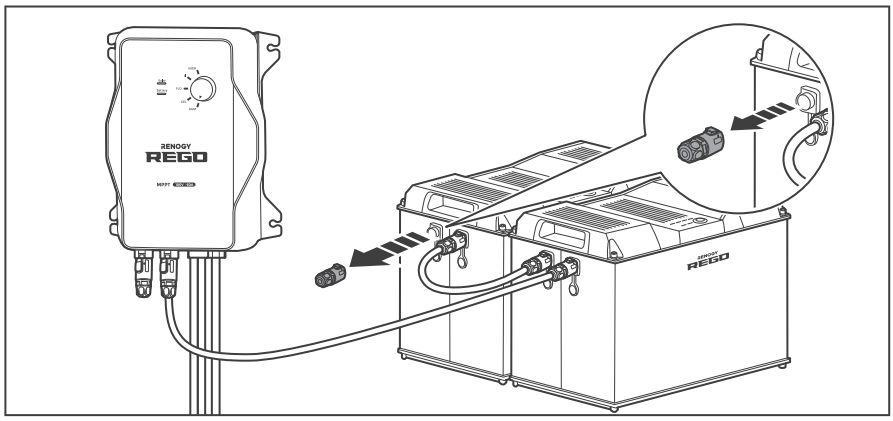

3. Unplug the LP16 Terminator Plug (7-Pin) on the first or last REGO device in the communication network.

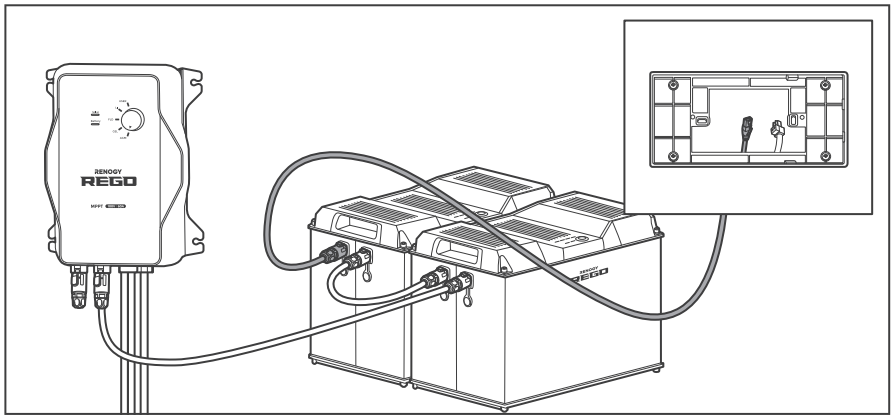

4. Insert the LP16 Plug (7-Pin) to RJ45 Communication Adapter Cables into the communication ports of other REGO devices.

External Load

Renogy ONE comes with 3 relays which can be connected to 3 DC loads (≤30V DC, ≤5A). You can power on/off the loads via Panel Switches on Renogy ONE. For users who do not need external loads, no adapter cable pre-embedding is required.

Recommended Accessories

Ring Terminal to Bare Wire Adapter Cable	Bare Wire Cable
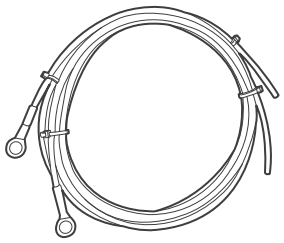	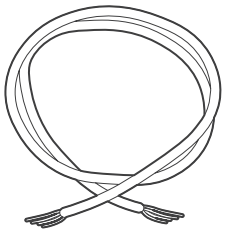

Cable Specifications

Cable Length (ft) / (m)	Recommended Cable Size
0-10ft / 0-3m	8AWG
11-20ft / 3-6m	6AWG
21-30ft / 9-6m	6AWG

WARNING

- For your safety, please select cables that meet the specifications according to the actual use.

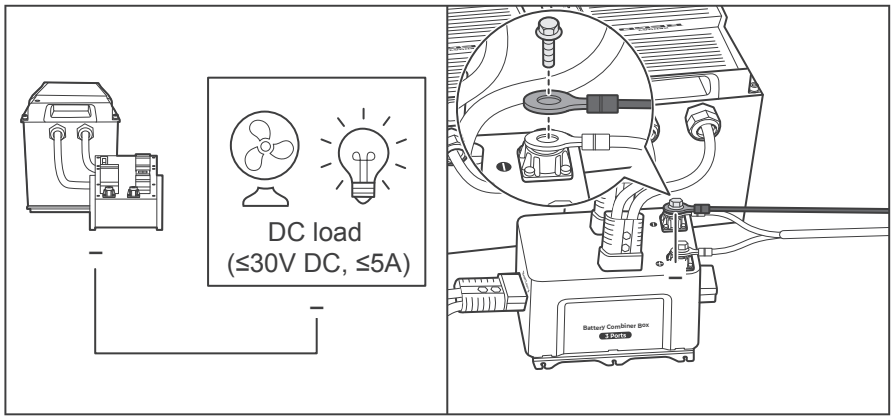

1. Connect one of the ring terminals of the adapter cable to the negative terminal of the DC power supply device, and connect the other end to the negative pole of the load.

CAUTION

- Illustrations in this user manual are based on scenarios where REGO 12V 400Ah Lithium Iron Phosphate Battery and REGO 3 Ports 400A Battery Combiner Box are adopted as DC power supplies.

WARNING

- Please ensure that the working current of an external DC load is less than or equal to 5A; otherwise Renogy ONE may be damaged.
- Please ensure that the output voltage of the DC power supply for an external DC load is less than or equal to 30V; otherwise Renogy ONE may be damaged.
- Make sure the DC power supply is powered off before connection.
- Please confirm the polarity of the DC power supply device before connection. A reverse polarity contact will result in abnormal operations.
- Please confirm the polarity of the load before connection. A reverse polarity contact may cause abnormal situation.

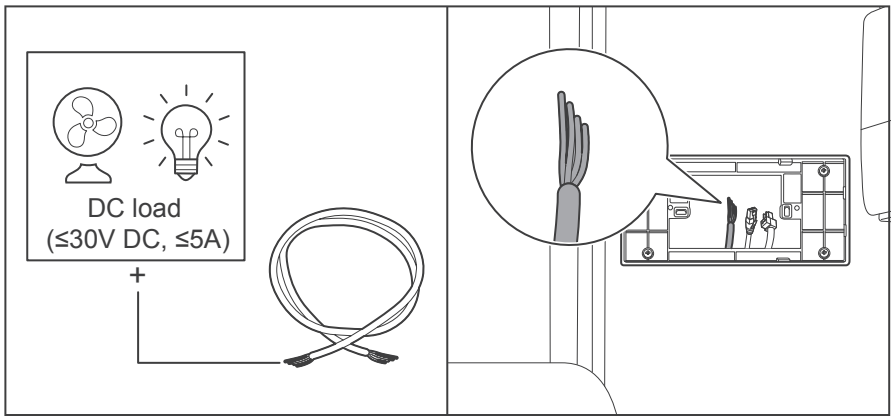

2. Connect the bare wire cable to the positive pole of the load, and reserve the other end in the installation hole.

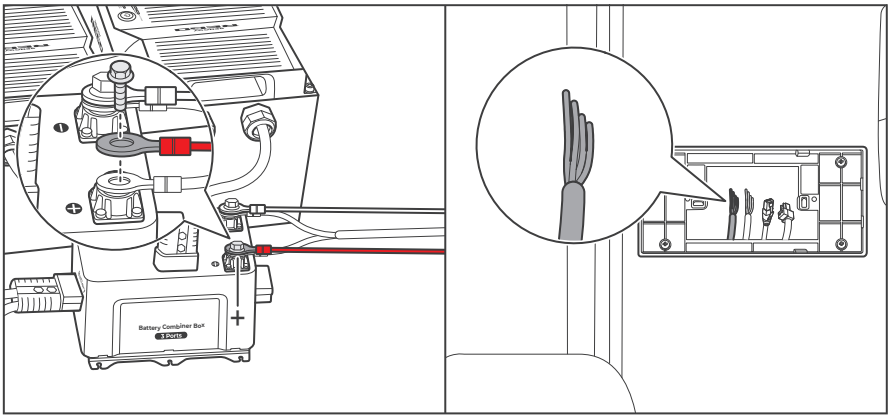

3. Connect the other ring terminal of the adapter cable to the positive terminal of the DC power supply device, and reserve the other end in the installation hole.

12V Power Cable

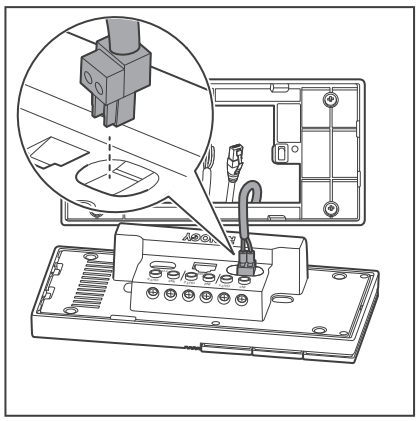

1. Insert the 12V power cable terminal block into Renogy ONE power port.

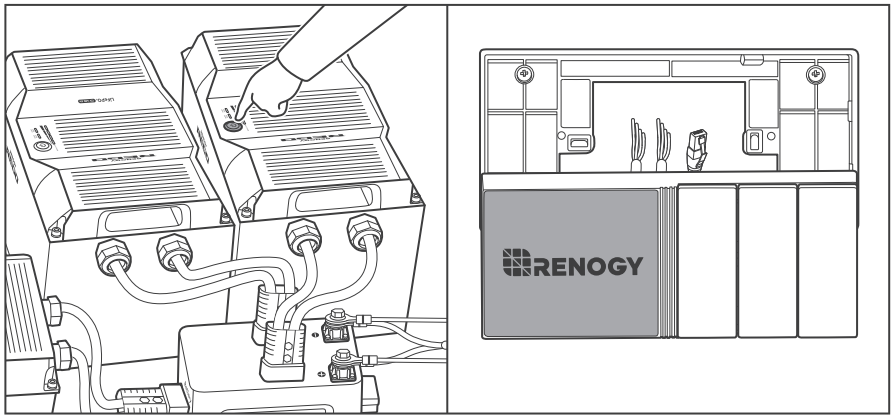

2. Power on the DC power supply and check if Renogy ONE automatically turns on with the LCD lighting up. After the test is complete, please power off the power supply.

CAUTION

- After correct power cable connection and normal power-on of the DC power supply, Renogy ONE is automatically powered on. Failed automatic power-on indicates a fault on Renogy ONE. For troubleshooting, refer to **Troubleshooting** in this user manual. For additional support, please contact our customer service through renogy.com/contact-us/.

WARNING

- Risk of electric shock! Please power off the DC power supply after the test on power-on of Renogy ONE is completed.

Communication Cables

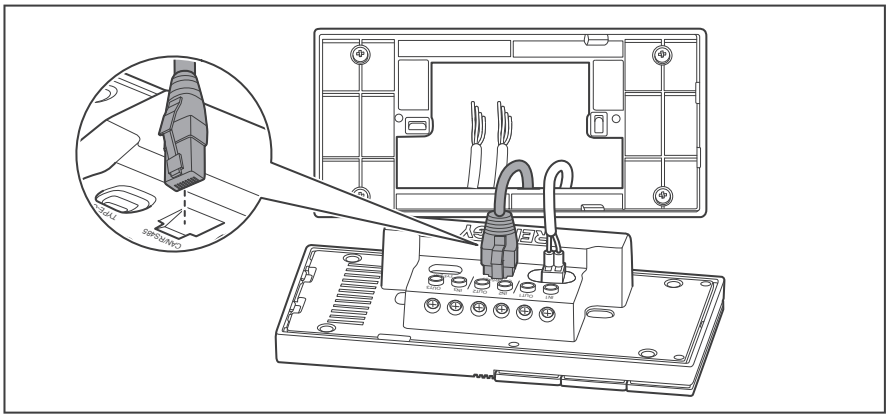

1. Connect the pre-embedded RJ45 connector to the RJ45 port of Renogy ONE.

External Load

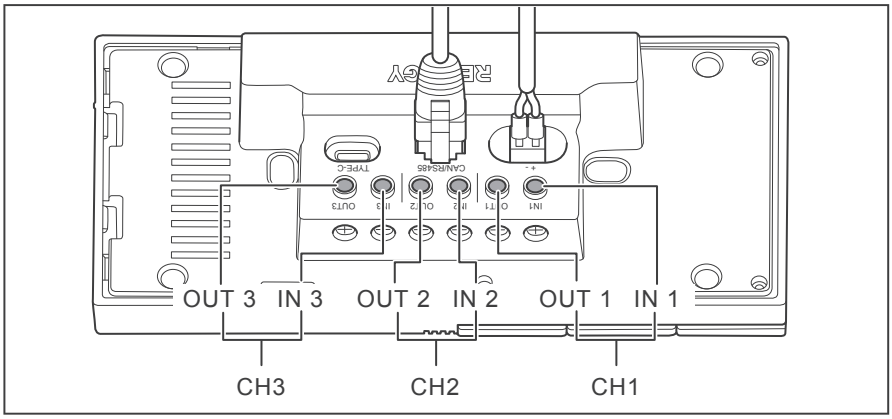

1. Ensure that the DC power supply cable and the cable that is connected to the positive pole of the load are connected to the same group of terminals. For example, “IN 1” and “OUT 1” are in a group.

WARNING

- Make sure the DC power supply is powered off before wiring.

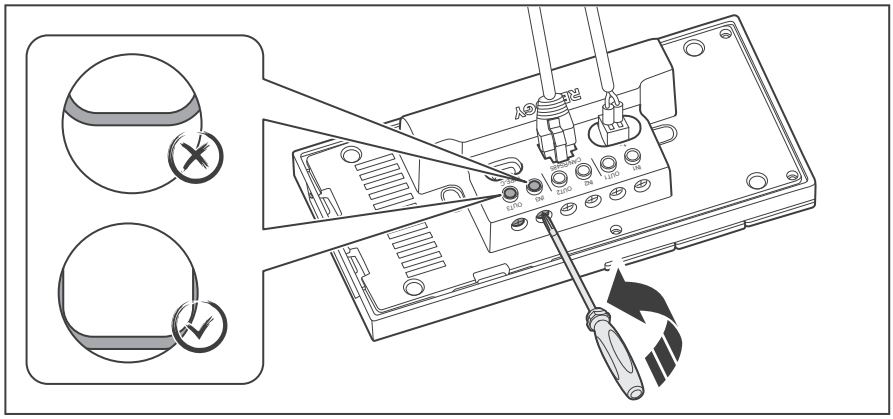

2. Use a Phillips screwdriver to turn the wire hatch screw counterclockwise. Make sure that the terminal hatch is completely open.

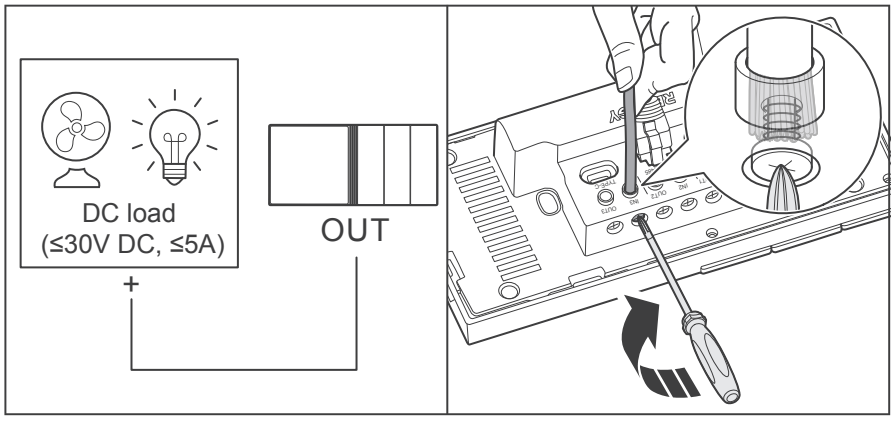

3. Insert the reserved adapter cable connecting to the positive terminal of the load into the Renogy ONE output terminal (OUT), and use a Phillips screwdriver to turn the wire hatch screw clockwise.

NOTE

- Strip some insulation off the bare wire end according to the depth of the installation hole.
- The maximum screw torque of wire hatch is 0.4 N•m. Do not overtighten the screws to avoid damage to the hatch.

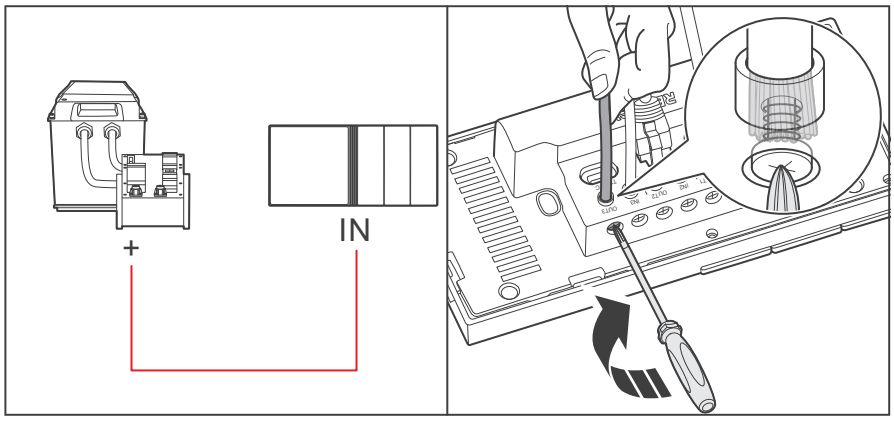

4. Insert the adapter cable connecting to the positive end of the DC power supply into the Renogy ONE input terminal (IN), and use a screwdriver to turn the wire hatch screw clockwise.

NOTE

- Strip some insulation off the bare wire end according to the depth of the installation hole.
- The maximum screw torque of wire hatch is 0.4 N•m. Do not overtighten the screws to avoid damage to the hatch.

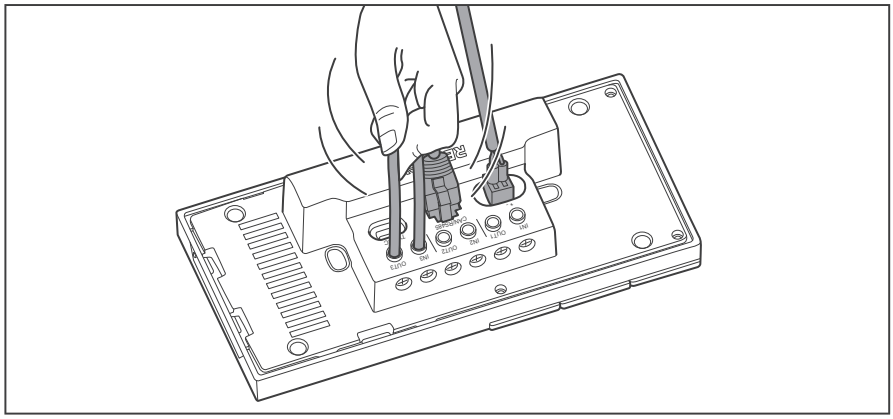

5. Make sure all connections are tight and secure.

Mounting

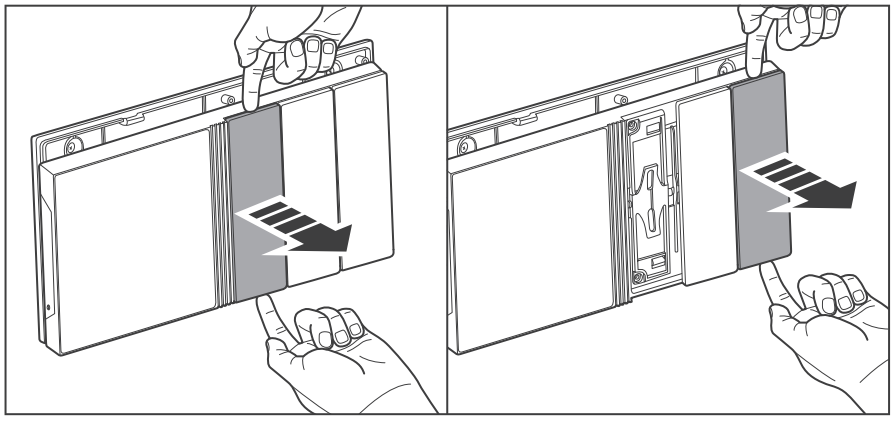

1. Disassemble Panel Switch 1 and Panel Switch 3 from Renogy ONE.

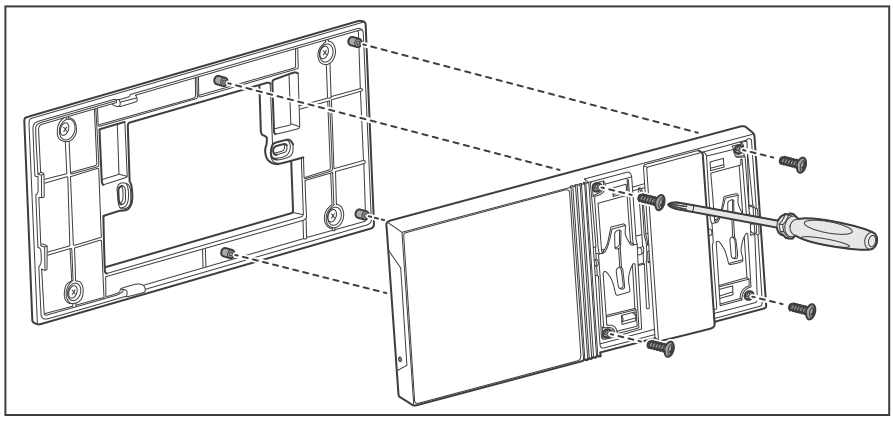

2. Put Renogy ONE on the base, and use the Phillips screwdriver to tighten the 4 M2 screws through the mounting holes, so that the Renogy ONE is fixed on the base.

NOTE

- Make sure that Renogy ONE is installed securely to prevent it from falling off.

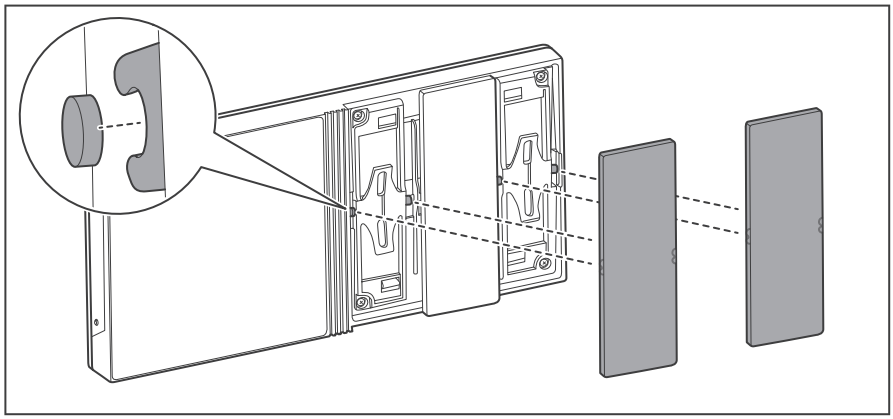

3. Align the snap on the back of the panel switch with the snap on the installation position and press firmly to complete the assembly of Panel Switch 1 and Panel Switch 3 on Renogy ONE.

Activation

Renogy ONE is easy to use. For initial use, Renogy ONE guides you through Wi-Fi connection, DC Home binding, and device adding via the activation wizard.

CAUTION

- You can tap **Skip** in the upper right corner of the main interface on Renogy ONE to skip some of the wizard steps. You can re-complete the activation operations through **Settings**.
- To monitor and operate connected devices remotely, you need to bind Renogy ONE to the DC Home app under stable Internet access.

Wi-Fi

On the home page of Renogy ONE, go to **Settings** > **System** > **Network** > **WLAN**.

NOTE

- Renogy ONE supports 2.4 GHz Wi-Fi only.

Binding

If you did not follow the system wizard to bind Renogy ONE to the DC Home app, please follow the steps below.

Method 1: Go to **Settings** > **System** > **Bind**, and then scan the QR code to bind Renogy ONE to the DC Home app.

Method 2: Tap on the main interface and follow the system wizard to bind Renogy ONE to the DC Home app.

Method 3: On the main interface of DC Home app, tap **+** and choose **Add Renogy ONE**, and then follow the system wizard to bind Renogy ONE.

With the binding complete, you can view the data of Renogy ONE, control the device, and set smart scenarios through the DC Home app.

CAUTION

- Ensure both Renogy ONE and your phone where the DC Home app runs are connected to the Internet.

Add Devices/Smart Accesories

How to add devices to Renogy ONE varies depending on the communication connection type.

- For wired communication (RV-C/RS485), the device is automatically recognized by and added to Renogy ONE.
- For wireless communication (Bluetooth/Zigbee), tap **Settings** and choose **Add Devices** on Renogy ONE.
- If you have bound Renogy ONE to the DC Home app, you can add devices and smart accessories through the DC Home app. On the Renogy ONE interface, tap **+** and choose **Add Devices** to add devices or smart accessories.

Renogy ONE is compatible with all Renogy's energy devices and smart accessories with communication functions (RV-C, RS485, Bluetooth, Zigbee).

CAUTION

- For adding Renogy energy devices via Bluetooth, make sure the device Bluetooth is turned on.

NOTE

- To ensure good compatibility, it is recommended to use Renogy energy devices and smart accessories.

INFO

- For adding smart accessories to Renogy ONE via Zigbee, resetting accessories is required. For details, refer to the instructions in the user manuals of specific smart accessories.

Power On/Off

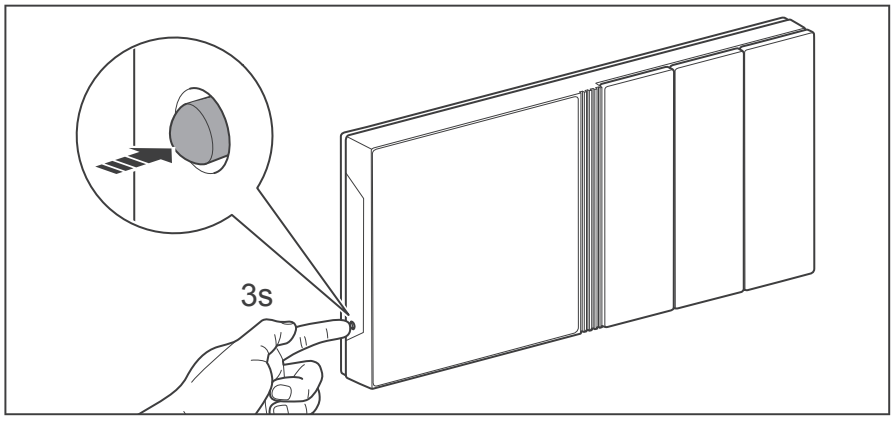

Press and hold the Power Button on Renogy ONE for 3 seconds to power on/off Renogy ONE.

Control External Loads

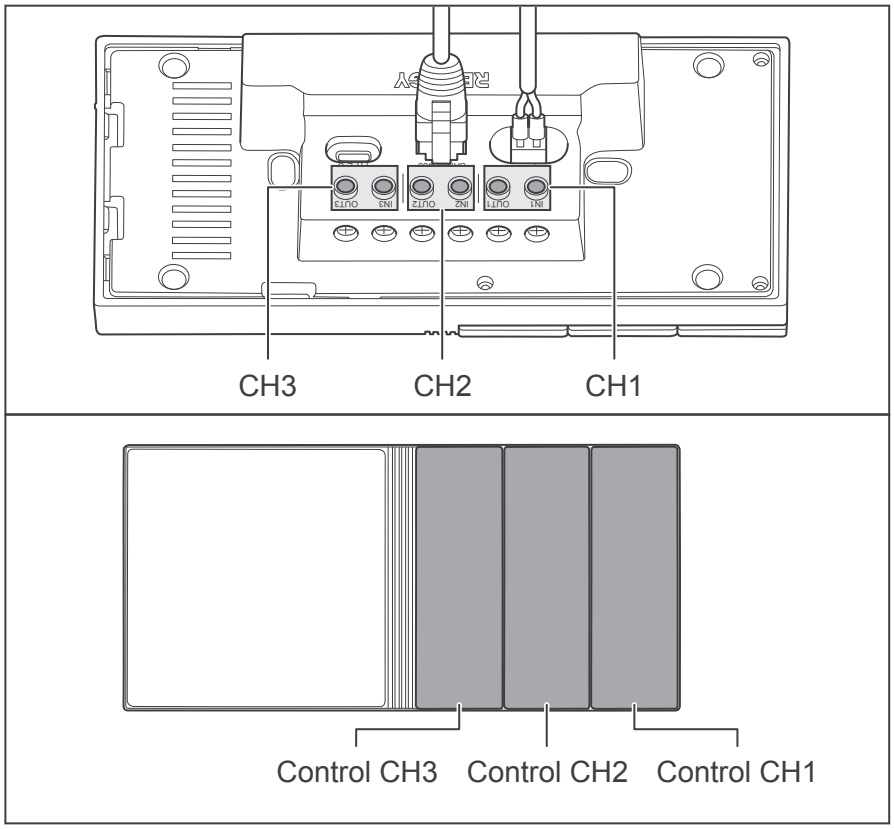

1. The 3 panel switches of Renogy ONE correspond to 3 panel relays respectively.

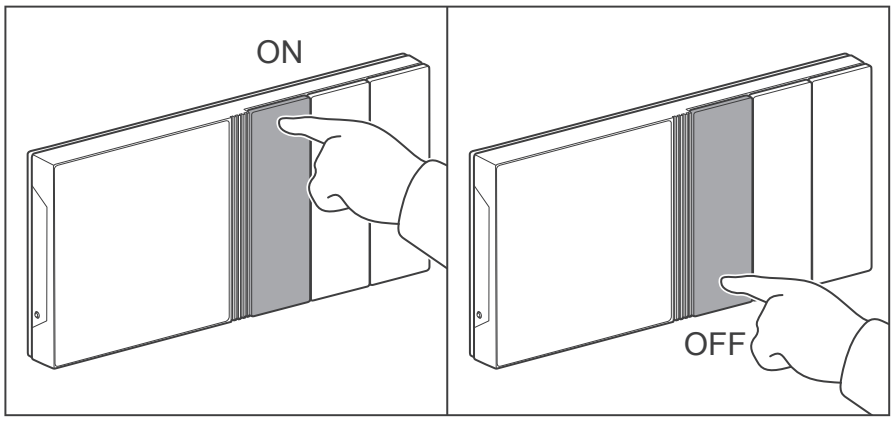

2. Press the panel switches to power on/off external loads.

You can modify the above default settings or set more functions for the panel switch through the DC Home app.

On the main interface of the DC home app, tap **Scenes** and tap **+**, set the conditions and actions of **When** and **Do** respectively, and then click **Save**.

Troubleshooting

Trouble	Solution
Cannot power on normally	1. Abnormal power supply. Please check whether the voltage of the power supply is within the normal range (8V to 16V DC). 2. Check whether the positive and negative polarities of the power terminals are normal. 3. Renogy ONE is damaged. Please contact our customer service through renogy.com/contact-us/.
Cannot add devices wirelessly	1. The device is too far from Renogy ONE. Please move the device near Renogy ONE. Bluetooth: within 10 meters in an open environment. Zigbee: within 50 meters in an open environment. 2. The smart accessories have been connected to other devices. Please initialize the smart accessories. 3. The device is not compatible with Renogy ONE. It is recommended to use the device sold by Renogy.
Cannot connect to Wi Fi router	1. Make sure the Wi-Fi router is working on the 2.4GHz band. 2. Make sure that the Wi-Fi router does not enable WPA3 encryption mode. 3. Make sure the Wi-Fi SSID and password are entered correctly. 4. Make sure that there is no metal shielding around Renogy ONE and Wi-Fi router; otherwise wireless communication will be affected.

Frequently Asked Questions

1. Does Renogy ONE have the function of coulometer?

   No.

2. How to establish connection with different types of batteries?

   Any Renogy batteries with communication interface (Bluetooth/CAN/RS485) can be connected.

   Batteries from the third-party can be connected via the Renogy Smart Battery Monitor with Shunt (in planning).

3. As a Zigbee gateway, does Renogy ONE support third-party Zigbee devices?

   It is recommended to use the smart accessories of Renogy, such as Smart Plug, Motion Sensor, Door & Window Sensor, and Smart Relay.

   There is no guarantee that all third-party Zigbee devices will be compatible.

4. When Renogy ONE is disconnected (offline), will the configured smart scene still work normally?

   Yes. Renogy ONE connects wirelessly with accessories via Zigbee protocol. The scenario configuration has been written into Renogy ONE system. In the case of disconnection (offline), Renogy ONE can still receive information from the smart accessories and send instructions to the smart accessories.

5. How many devices can Renogy ONE connect via Bluetooth/RS485/RV-C and Zigbee?

   Renogy ONE supports up to 7 Bluetooth devices, 64 RS485 or RV-C devices, and theoretically supports up to 200 ZigBee devices, according to the hardware configuration and technical architecture.

   Due to the complicated situation, please refer to the actual test results.

6. How long does Renogy ONE support the local storage of device data?

   30 days.

7. Must Renogy ONE be bound to the DC Home app before it can be used?

   No. you can use some basic functions of Renogy ONE, such as adding energy devices, simply viewing the status and data of energy devices. After Renogy ONE is bound to the DC Home app, you can use more functions, such as remote viewing energy devices and configuring smart scenes.

8. Can Renogy ONE connect to the Internet through a mobile phone hotspot?

   Yes.

Frequently Asked Questions

9. Does Renogy ONE support WPA3 encrypted Wi-Fi network?

   No.

10. Does Renogy ONE support 5G Hz Wi-Fi network?

    No.

11. Why does Renogy ONE need regular system updates?

    Renogy has always been committed to providing customers with the best user experience. And continuous product improvements are made to enable customers to live a smarter off-grid life.

Maintenance

Inspection

For optimum performance, it is recommended to perform these tasks regularly.

- Check the appearance of the Renogy ONE to make sure it is clean and dry.
- Ensure the Renogy ONE is installed in a clean, dry and ventilated area.
- Ensure there is no damage or wear on the cables.
- Ensure the firmness of the connectors and check if there are any loose, damaged or burnt connections.
- Ensure that the Battery indicator and Fault indicator are in normal state.
- Ensure there is no any corrosion, insulation damage, or discoloration marks of overheating or burning.

NOTE

- In some applications, corrosion may exist around the contacts inside the connector.

Corrosion can loosen springs and increase resistance, leading to premature connection failure. Please apply dielectric grease to each connector contact periodically. Dielectric grease repels moisture and protects the connector contacts from corrosion.

WARNING

- Risk of electric shock! Make sure that all power is turned off before touching the terminals on the Renogy ONE.

Cleaning

Please follow the steps below to clean the Renogy ONE regularly.

- Shut down Renogy ONE. If you clean the inside of the device, you need to disconnect the power supply.
- Wipe the charger housing and connector contacts with a damp cloth or non-metallic brush. If it is not clean after wiping, use a household cleaner.
- Dry the Renogy ONE with a clean cloth and keep the area around the Renogy ONE clean and dry.
- Make sure the Renogy ONE is completely dry before reconnecting the connector to the Renogy ONE.

Storage

Please follow the tips below to ensure that the Renogy ONE is stored well.

- Disconnect all connectors that are connected to the Renogy ONE.
- By applying dielectric grease to each connector contact, the dielectric grease repels moisture and protects the connector contacts from corrosion.

Emergency Responses

Fire | Flooding | Smell | Noise

In the event of any threat to health or safety, always begin with the steps below before addressing other suggestions.

- Immediately contact the fire department or other relevant emergency response team.
- Notify all people who might be affected and ensure that they can evacuate the area.

WARNING

- ONLY perform the suggested actions below if it is safe to do so.

Fire

1. Disconnect all cables connected to the Renogy ONE.
2. Put out the fire with a fire extinguisher. Acceptable fire extinguishers include water, CO2, and ABC.

WARNING

- Do not use type D (flammable metal) fire extinguishers.

Flooding

1. If the Renogy ONE is submerged in water, stay away from the water.
2. Disconnect all cables connected to the Renogy ONE.

Smell

1. Disconnect all cables connected to the Renogy ONE.
2. Make sure nothing is in contact with the Renogy ONE.
3. Ventilate the room.

Noise

1. Disconnect all cables connected to the Renogy ONE.
2. Make sure no foreign objects are stuck in the Renogy ONE connector.

Technical Support

For additional support, contact the Renogy technical support team through renogy.com/contact-us. Have the following information available when contacting Renogy.

- Owner name
- Contact information
- Order number
- Purchase channel
- Serial number
- Brief description of the issue

Visit renogy.com to find relevant documentation or get more support via "Contact Us".

US	www.renogy.com	**CN**	www.renogy.cn
UK	uk.renogy.com	**CA**	ca.renogy.com
AU	au.renogy.com	**JP**	renogy.jp
FR	fr.renogy.com	**DE**	de.renogy.com
ES	es.renogy.com	**KR**	kr.renogy.com

Technical Specifications

Item	Parameter
Product Name	Renogy ONE M1
Model	RMS-LP4-G2-US
Power Supply	8V to 16V DC (5V DC for USB Type-C)
Power Consumption	< 2.5W (standby)
Ports	USB Type-C (5V DC) RJ45 (CAN & RS485) 2-pin 3.81 mm pluggable terminal block (12V DC)
Wireless Communication	Wi-Fi (IEEE 802.11b/g/n 2.4GHz) Bluetooth 2.1/4.2 and Bluetooth LE Zigbee (IEEE 802.15.4)
Protocols	RV-C / Modbus / Zigbee 3.0
Touch Screen	4 inches (480 x 480p) White backlight with adjustable brightness
Load	≤30V DC, 5A Max / Channel
Operating Temperature	20 °C to 50 °C / 68 °F to 122 °F
Operating Humidity	0% to 95% RH
Operating Altitude	Less than 2000m above sea level
Installation	Flush mounting
Dimensions	181.8 x 86.8 x 42.2 mm (7.16 x 3.42 x 1.66 in)

Dimensions

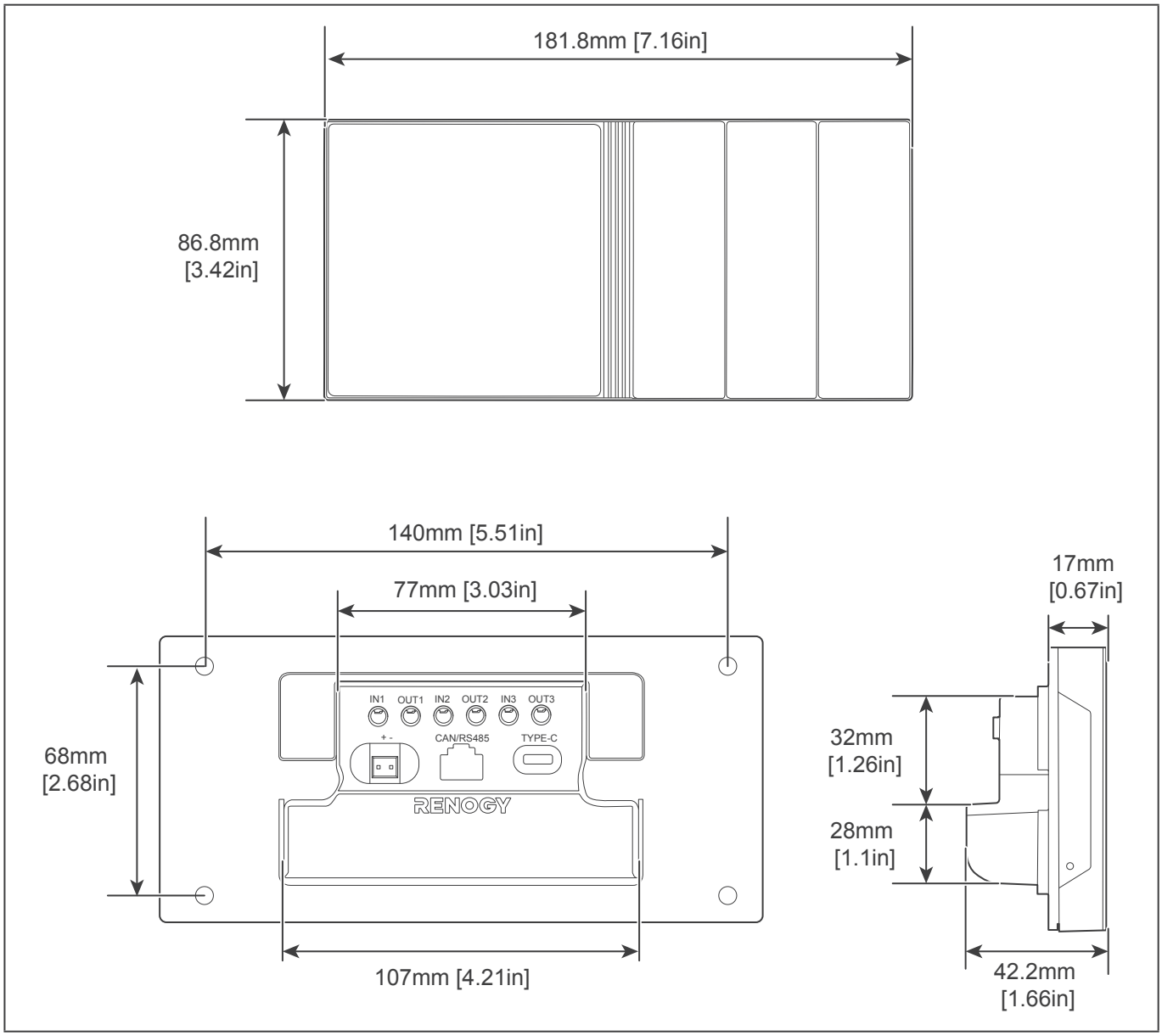

CAUTION

- Dimensional tolerance of ±0.5 mm

FCC Statement

This device complies with Part 15 of the FCC Rules. Operation is subject to the following two conditions:

(1) This device may not cause harmful interference.

(2) This device must accept any interference received, including interference that may cause undesired operation.

This equipment has been tested and found to comply with the limits for a Class B digital device, pursuant to Part 15 of the FCC Rules. These limits are designed to provide reasonable protection against harmful interference in a residential installation. This equipment generates, uses and can radiate radio frequency energy and, if not installed and used in accordance with the instructions, may cause harmful interference to radio communications. However, there is no guarantee that interference will not occur in a particular installation. If this equipment does cause harmful interference to radio or television reception, which can be determined by turning the equipment off and on, the user is encouraged to try to correct the interference by one or more of the following measures:

(1) Orient or relocate the receiving antenna.

(2) Increase the separation between the equipment and receiver.

(3) Connect the equipment into an outlet on a circuit different from that to which the receiver is connected.

(4) Consult the dealer or an experienced radio/TV technician for help.

FCC Radiation Exposure Statement

This equipment complies with FCC radiation exposure limits set forth for an uncontrolled environment. This equipment should be installed and operated with minimum distance 20cm between the radiator & your body.

Privacy Policy

Last modified: April 14, 2022

RENOGY (“us”, “we”, or “our”) operates on RENOGY ONE device (hereinafter referred to as the “Service”).

This page informs you of our policies regarding the collection, use and disclosure of personal data when you use our Service and the choices you have associated with that data.

We use your data to provide and improve the Service. By using the Service, you agree to the collection and use of information in accordance with this policy. Unless otherwise defined in this Privacy Policy, the terms used in this Privacy Policy have the same meanings as in our Terms and Conditions, accessible from www.renogy.com.

Definitions

- **Service**

Service includes but not limited to, serving as a central control panel for your RENOGY ONE system, enabling you to control your entire system from one single touchscreen, connecting energy devices and smart accessories, and synchronizing this data to your RENOGY server and mobile App.

- **Personal Data**

Personal Data means data about a living individual who can be identified from those data (or from those and other information either in our possession or likely to come into our possession).

- **Usage Data**

Usage Data is data collected automatically, either generated by the use of the Service or from the Service infrastructure itself (for example, your IP address and user log).

- **Data Controller**

Data Controller means the natural or legal person who (either alone or jointly or in common with other persons) determines the purposes for which and the manner in which any personal information are, or are to be, processed.

For the purpose of this Privacy Policy, we are a Data Controller of your Personal Data.

- **Data Processors (or Service Providers)**

Data Processor (or Service Provider) means any natural or legal person who processes the data on behalf of the Data Controller.

We may use the services of various Service Providers in order to process your data more effectively.

- **Data Subject (or User)**

Data Subject is any living individual who is using our Service and whose Personal Data is collected by us.

- **Information Collection and Use**

We collect several different types of information for various purposes to provide and improve our Service to you.

Types of Data Collected

Personal Data

While using our Service, we may ask you to provide us with certain personally identifiable information that can be used to contact or identify you (“Personal Data”). Personally identifiable information may include, but is not limited to:

- Email address
- First name and last name
- Address, State, Province, ZIP/Postal code, City

We may use your Personal Data to contact you with newsletters, marketing or promotional materials and other information that may be of interest to you. You may opt out of receiving any, or all, of these communications from us by following the unsubscribe link or the instructions provided in any email we send.

Usage Data

We may also collect information on how the Service is accessed and used (“Usage Data”). This Usage Data may include information such as your Renogy One Internet Protocol address (e.g. IP address), Wi-Fi access information, power usage, sensor history, user log, unique device identifiers and other diagnostic data.

Location Data

We may use and store information about your location if you give us permission to do so (“Location Data”). We use this data to provide features of our Service, to improve and customise our Service.

You can enable or disable location services when you use our Service at any time by way of your device settings.

Use of Data

RENOGY uses the collected data for various purposes:

- To provide and maintain our Service
- To notify you about changes to our Service
- To allow you to participate in interactive features of our Service when you choose to do so
- To provide customer support
- To gather analysis or valuable information so that we can improve our Service
- To monitor the usage of our Service
- To detect, prevent and address technical issues
- To provide you with news, special offers and general information about other goods, services and events which we offer that are similar to those that you have already purchased or enquired about unless you have opted not to receive such information

Legal Basis for Processing Personal Data under the General Data Protection Regulation (GDPR)

If you are from the European Economic Area (EEA), UK or Switzerland, RENOGY’s legal basis for collecting and using the personal information described in this Privacy Policy depends on the

Personal Data we collect and the specific context in which we collect it.

RENOGY may process your Personal Data because:

- We need to perform a contract with you
- You have given us permission to do so
- The processing is in our legitimate interests and it is not overridden by your rights
- To comply with the law

Retention of Data

RENOGY will retain your Personal Data only for as long as is necessary for the purposes set out in this Privacy Policy. We will retain and use your Personal Data to the extent necessary to comply with our legal obligations (for example, if we are required to retain your data to comply with applicable laws), resolve disputes and enforce our legal agreements and policies.

RENOGY will also retain Usage Data for internal analysis purposes. Usage Data is generally retained for a shorter period of time, except when this data is used to strengthen the security or to improve the functionality of our Service, or we are legally obligated to retain this data for longer periods.

Transfer of Data

Your information, including Personal Data, may be transferred to - and maintained on - computers located outside of your state, province, country or other governmental jurisdiction where the data protection laws may differ from those of your jurisdiction.

If you are located outside the United States and choose to provide information to us, please note that we transfer the data, including Personal Data, to the United States and process it there.

RENOGY will take all the steps reasonably necessary to ensure that your data is treated securely and in accordance with this Privacy Policy and no transfer of your Personal Data will take place to an organization or a country unless there are adequate controls in place including the security of your data and other personal information.

Disclosure of Data

Disclosure for Law Enforcement

Under certain circumstances, RENOGY may be required to disclose your Personal Data if required to do so by law or in response to valid requests by public authorities (e.g. a court or a government agency).

Legal Requirements

RENOGY may disclose your Personal Data in the good faith belief that such action is necessary to:

- To comply with a legal obligation
- To protect and defend the rights or property of RENOGY
- To prevent or investigate possible wrongdoing in connection with the Service
- To protect the personal safety of users of the Service or the public
- To protect against legal liability

Security of Data

The security of your data is important to us but remember that no method of transmission over the Internet or method of electronic storage is 100% secure. While we strive to use commercially acceptable means to protect your Personal Data, we cannot guarantee its absolute security.

Your Data Protection Rights under the General Data Protection Regulation (GDPR)

If you are a resident of the European Economic Area (EEA), the UK or Switzerland, you have certain data protection rights. RENOGY aims to take reasonable steps to allow you to correct, amend, delete or limit the use of your Personal Data.

If you wish to be informed about what Personal Data we hold about you and if you want it to be removed from our systems, please contact us.

In certain circumstances, you have the following data protection rights:

- **The right to access, update or delete the information we have on you**. Whenever made possible, you can access, update or request deletion of your Personal Data directly within your account settings section. If you are unable to perform these actions yourself, please contact us to assist you.
- **The right of rectification**. You have the right to have your information rectified if that information is inaccurate or incomplete.
- **The right to object**. You have the right to object to our processing of your Personal Data, in certain circumstances including where we are processing your Personal Data on the basis of our legitimate interests.
- **The right of restriction**. You have the right to request that we restrict the processing of your personal information.
- **The right to data portability**. You have the right to be provided with a copy of the information we have on you in a structured, machine-readable and commonly used format.
- **The right to erasure**. You have the right to request that your Personal Data be deleted in its entirety from our systems. We will comply with your request unless we are required to retain your Personal Data due to legal or regulatory requirements, as stated in this policy.
- **The right to withdraw consent**. You also have the right to withdraw your consent at any time where RENOGY relied on your consent to process your personal information.

Please note that we may ask you to verify your identity before responding to such requests.

You have the right to complain to a Data Protection Authority about our collection and use of your Personal Data. For more information, please contact your local data protection authority in the European Economic Area (EEA), the ICO in the UK or the Federal Data Protection and Information Commissioner in Switzerland.

Your Privacy Rights under the California Consumer Privacy Act (CCPA)

If you are a California resident, you have certain privacy rights as specified under California law, including the CCPA. These include:

- **The right to know what personal information we collect**
- **The right to know who we share your data with**. We do not sell your data, but we do share your information with others for legitimate business purposes, as described above.
- **The right to request deletion of your data**, unless an exception applies. Examples of exceptions include when we need to keep data to meet legal obligations or fix security

issues. Upon your verified request, we will delete your personal information unless an exception applies, and will direct our service providers to do the same.

- **Get a timely response**. You have the right to make two free requests in any 12 month period. We will respond to your request within 45 days, and in more difficult cases we may extend our response time by another 45 days.
- **Non-discrimination**. We will not hold it against you when you exercise any of your rights, and we encourage you to review your privacy settings closely and reach out to us with your questions.

Under the CCPA, we are required to inform you of the data we may collected in the last 12 months:

- Identifiers, such as your name, email address and IP address
- Internet or other electronic network activity information

We may share your personal information with a third party for business purposes or at your direction. We enter into agreements with our service providers in which they can only use your information for specific purposes and are required to ensure its confidentiality. In the past 12 months, we have disclosed the above categories of personal information for a business purpose or at your direction with our affiliates, services providers and third parties. For more details on third parties we share data with, please see the Service Providers section below.

Please contact us at support@renogy.com if you have any questions about data protection or if you wish to exercise any of your rights described above.

Service Providers

We may employ third party companies and individuals to facilitate our Service ("Service Providers"), provide the Service on our behalf, perform Service-related services or assist us in analyzing how our Service is used.

These third parties have access to your Personal Data only to perform these tasks on our behalf and are obligated not to disclose or use it for any other purpose.

Analytics

We may use third-party Service Providers to monitor and analyze the use of our Service.

Changes to This Privacy Policy

We may update our Privacy Policy from time to time. We will notify you of any changes by posting the new Privacy Policy on this page.

We will let you know via email and/or a prominent notice on our Service, prior to the change becoming effective and update the "effective date" at the top of this Privacy Policy.

You are advised to review this Privacy Policy periodically for any changes. Changes to this Privacy Policy are effective when they are posted on this page.

Contact Us

If you have any questions about this Privacy Policy, please contact us via renogy.com/contact-us.

Visit renogy.com to find relevant documentation or get more support via "Contact Us".
Renogy reserves the right to change the contents of this manual without notice.

Join the Renogy Power Plus Community
by downloading the DC Home App.
Find your e-warranty here, and more.