# Owners Manual

**SENSARRAY AND SENSARRAY+**

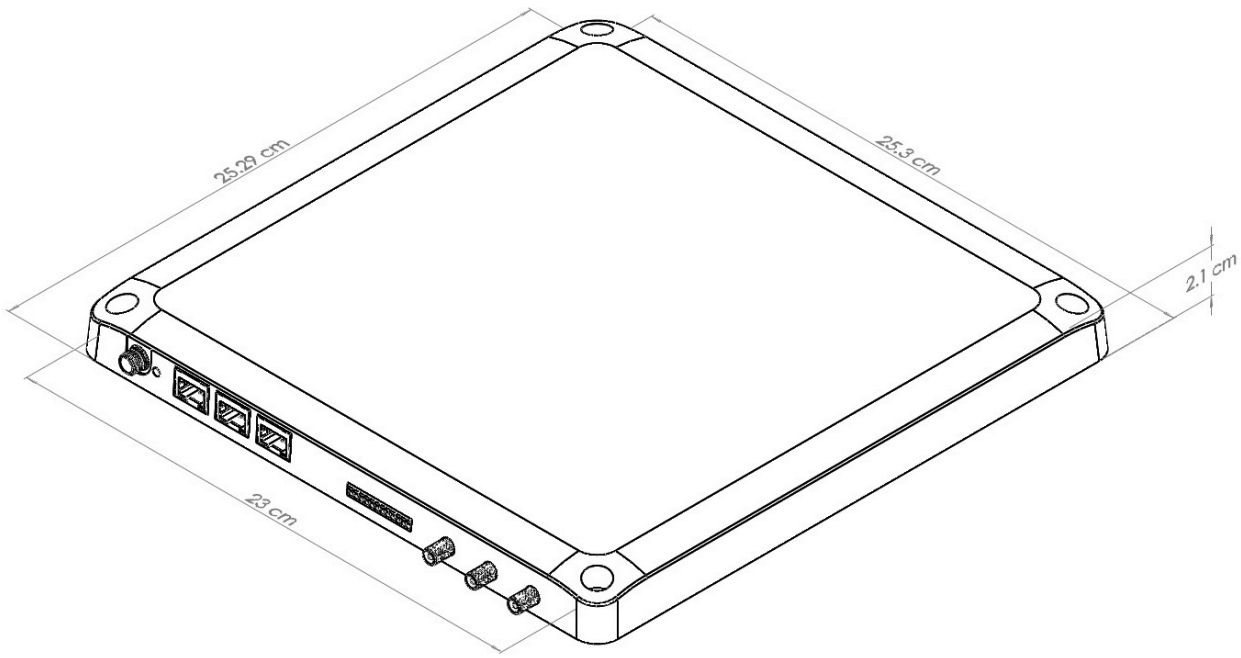

# Legal Notices

Copyright ©2017 SensThys Inc. All rights reserved.

SensThys has intellectual property rights relating to technology embodied in the products described in this document, including without limitation certain patents or patent pending applications in the U.S. or other countries.This document and the products to which it pertains are distributed under licenses restricting their use, copying, distribution and de-compilation. No part of this product documentation may be reproduced in any form or by any means without the prior written consent of SensThys Corporation and its licensors, if any. Third party software is copyrighted and licensed from Licensors. SensThys, SensArray and other graphics, logos, and service names used in this document are trademarks of SensThys in the U.S. and other countries. All other trademarks are the property of their respective owners. U.S. Government approval required when exporting the product described in this documentation.

Federal Acquisitions: Commercial Software -- Government Users Subject to Standard License Terms and Conditions. U.S. Government: If this Software is being acquired by or on behalf of the U.S. Government or by a U.S. Government prime contractor or subcontractor (at any tier), then the Government's rights in the Software and accompanying documentation shall be only as set forth in this license; this is in accordance with 48 C.F.R. 227.7201 through 227.7202-4 (for Department of Defense (DoD) acquisitions) and with 48 C.F.R. 2.101 and 12.212 (for non-DoD acquisitions).

DOCUMENTATION IS PROVIDED “AS IS” AND ALL EXPRESS OR IMPLIED CONDITIONS, REPRESENTATIONS AND WARANTEES, INCLUDING ANY IMPLIED WARRANTY OF MERCHANTABILITY, FITNESS FOR A PARTICULAR PURPOSE OR NON-INFRINGMENT ARE HEREBY DISCLAIMED, EXCEPT TO THE EXTENT THAT SUCH DISCLAIMERS ARE HELD TO BE LEGALLY INVALID.

FCC Compliance

This equipment has been tested and found to comply with Part 15 of the FCC Rules. Operation is subject to the following two conditions: (1) This device may not cause harmful interference, and (2) this device must accept any interference received, including interference that may cause undesired operation.

Any change or modification to this product voids the user’s authority to operate per FCC Part 15 Subpart A. Section 15.21 regulations.

Industry Canada Compliance

This device complies with Industry Canada License-exempt RSS standards. Operation is subject to the following two conditions: (1) this device may not cause interference and (2) this device must accept any interference, including interference that may cause undesired operation of the device. This device has been designed to operate with a variety of different gain (dBi). The reader maximum output power is set by the gain of the antenna. Using an antenna having a higher gain is strictly prohibited per regulations of Industry Canada. In addition, using the reader at a power exceeding the maximum output power for a given antenna is also strictly prohibitied. The required antenna impedance is 50 ohms. To reduce potential radio interference to other users, the antenna type and its gain should be so chosen that the equivalent isotropically radiated power (EIRP) is not more than that required for successful communication.

Conformité d'Industrie Canada

Cet appareil est conforme aux normes RSS exemptées de licence d'Industrie Canada. L'opération est soumise aux deux conditions suivantes: (1) cet appareil ne doit pas provoquer d'interférence et (2) cet appareil doit accepter toute interférence, y compris les interférences susceptibles de provoquer un fonctionnement indésirable de l'appareil. Cet appareil a été conçu pour fonctionner avec une variété de gains différents (dBi). La puissance de sortie maximale du lecteur est définie par le gain de l'antenne. L'utilisation d'une antenne ayant un gain plus élevé est strictement interdite par règlement d'Industrie Canada. En outre, l'utilisation du lecteur à une puissance supérieure à la puissance de sortie maximale pour une antenne donnée est également strictement interdite. L'impédance d'antenne requise est de 50 ohms. Afin de réduire les interférences radio potentielles avec d'autres utilisateurs, le type d'antenne et son gain devraient être choisis de manière à ce que la puissance éloignée isotropiquement (EIRP) équivalente soit supérieure à celle requise pour une communication réussie.

Caution

Reader antennas should be positioned so that personnel in the area for prolonged periods may safely remain at least 31 cm (12.2 in) in an uncontrolled environment from the antenna’s surface. See FCC OET Bulletin 56 “Hazards of radio frequency and electromagnetic fields” and Bulletin 65 “Human exposure to radio frequency electromagnetic fields.”

Vorsicht

Reader Antennen sollten so positioniert werden, dass das Personal im Bereich über einen längeren Zeitraum kann sicher bleiben mindestens 31 cm (12.2 Zoll) entfernt von der Antenne Oberfläche, in einer unkontrollierten Umgebung. Siehe FCC OET Bulletin 56 "Gefahren der Radiofrequenz und elektromagnetische Felder" und Bulletin 65 "Human Exposition gegenüber hochfrequenten elektromagnetischen Feldern."

# Table of Contents


LEGAL NOTICES 2

TABLE OF CONTENTS 3

CHAPTER 1 INTRODUCTION 4

Overview 5

Requirements 6

Specifications 7

Drawings and Block Diagrams 10

CHAPTER 2 INSTALLATION AND OPERATION 17

Receiving the unit 17

Connecting to the Unit 17

Start-Up 18

Operation with SensArray GUI 19

CHAPTER 3 BI-DIRECTIONAL POWER OVER ETHERNET (BI-POE®) SYSTEM 25

Concept 25

Power Distribution 25

Networking with the SensArray 26

CHAPTER 4 THERMAL MANAGEMENT 26

GLOSSARY OF TERMS 28

# CHAPTER 1 Introduction

Congratulations on your selection of the SensArray platform! We have designed this equipment to be the foundation of next-generation IoT RFID systems. This is a highly integrated solution that fully supports your system integration and operation while reducing deployment cost. Let's get started!

This Hardware Setup Guide provides instructions for installing and operating the SensArray.

This document is designed for use by RFID system integrators, IT networking professionals, and software developers - those who wish to develop RFID, networking solutions, and agile power deliver systems to take full advantage of the unique capabilities of the SensArray.

The SensArray is available as a stand-alone product or as part of a development kit that allows new users to get up and running quickly.

Included with each developer's kit is the following:

- ***SensArray*** – The two-port version ideal for daisy-chained configurations or standalone single antenna read point.
- ***SensArray+*** – The full-featured version ideal for full data and power networking and driving multi-antennas and GPIO from a single SensArray
- ***Alien F800X*** – A sophisticated reader that can be conveniently used to control an array of SensArray through the Emissary software suite
- ***Cabling*** – Ethernet, power and RF cabling for the Alien F800X and the SensArray
- ***External Antenna*** – A low-profile external antenna to be connected to one of the external antenna ports on the SensArray+
- ***POE injector*** – An external Power Over Ethernet (POE) injector is provided to provide data and power to the SensArray
- ***Links to download documentation and support software***

The link provided will give the following additional information about RFID, POE, and the SensArray:

- ***RFID Primer*** – an overview of RFID technology and a glossary of terms
- ***POE Primer*** – an overview of POE technology and a glossary of terms
- ***Configurable Power*** – an overview of bidirectional POE (Bi-PoE®) and the power distribution features enabled by this technology

- ***Interface Guide*** – an overview of the interfaces for the SensArray, including General Purpose Input/Output (GPIO), POE, SMA outputs for antennas, DC power input, POE inputs.
- ***Graphical User Interface (GUI)*** – A convenient interface to run the SensArray. The GUI can be installed on any PC running Windows 7, 8 or 10. The GUI is suitable for initial start-up and applications where only a few SensArrays are operating. Examples include small showroom floors or a series of portals.
- ***Emissary and F800X Reference Guide*** – a quick reference guide summarizing the features and use of the Emissary/F800X to control SensArray in more complex environments.
- ***Upgrade Guide*** – instructions for the user to upgrade the firmware of the SensArray while in field operation. The SensArray can be upgraded through any Ethernet port on the unit.
- ***Developer's Guides*** – Programming Interfaces and Example Code.

## Overview

The SensArray+ integrates several functions into a thin-profile form factor. The capabilities included are:

- A high-power, high-sensitivity RFID reader integrated with an 8.5 dBiC internal antenna for reading and programming EPC Class 1 Generation 2 RFID tags;
- An Ethernet switch that allows for convenient IT networking of the SensArray to other SensArrays or IP devices. Three Ethernet ports are externally available on the SensArray+ (33111);
- A three-port, self-configuring and reconfigurable power distribution system compatible with all current generation POE devices, including both PD and PSE devices. The SensArray can receive power through an IEEE 802.3af (POE) or IEEE 802.3at (POE+) compliant network on any of the Ethernet ports or through the 48VDC input. The SensArray can deliver power to an 802.3at network through any port;
- An additional 48VDC input on the SensArray+ to increase the power distribution capabilities of the unit;
- A 12-pin GPIO interface on the SensArray+ to read digital inputs from up to 4 external devices and to control the operation of up to four external devices.
- Three reverse-polarity SMA connectors to power external antennas.

The SensArray is ideal for applications where a single read point is required.

- A high-power, high-sensitivity RFID reader integrated with an 8.5 dBiC internal antenna for reading and programming EPC Class 1 Generation 2 RFID tags;
- An Ethernet switch that allows for convenient IT networking of the SensArray to other SensArrays or IP devices. Two Ethernet ports are externally available on the SensArray (32000);
- A two-port, self-configuring and reconfigurable power system compatible with all current generation POE devices, including both PD and PSE devices. The SensArray can receive power through an IEEE 802.3af (POE) or IEEE 802.3at (POE+) compliant network on either of the Ethernet ports. The SensArray can deliver power to an 802.3at network through either port.

The SensArray family is designed with light on-board computational capabilities. The SensThys GUI is designed to operate and control the units, both in initial start-up and in basic applications like portal readers. A reader with substantial computing power, such as the Alien F800X or a server running control software, can handle interrogation and control of the integrated RFID reader when used in larger applications.

### EPC Class 1 GEN 2 UHF RFID Tags

The SensArray can power an internal antenna, which can excite tags in front of the SensArray. The SensArray+ can power up to three external antennas, via connection of a coaxial cable to one of the SMA connectors, allowing illumination of tags in different directions and locations.

The SensArray is designed to read and program any EPC Class 1 Generation 2 tag. Class 1 tags are "passive" devices, meaning they do not have a battery or other onboard power source. They are powered solely by the RF energy transmitted by an RFID reader.

Tags communicate with the SensArray through backscatter modulation. The tags do not transmit RF energy. Instead, they change their reflective characteristics in a controlled way and reflect RF energy back to the reader. An analogy to this is the way you can use a mirror to signal someone by reflecting light from the Sun.

## Requirements

To interface with the SensArray and use the internal antenna, you will need the following:

- Power – Power can be delivered to the SensArray through an 802.3at compatible network with a POE-enabled Ethernet switch or a Power Injector attached to one of the Ethernet ports on the SensArray or through the 48VDC input (SensArray+)

- Control – A Windows 7, 8, or 10 PC running the supplied GUI, a server running your own control system, or an F800X reader.

To operate multiple antennas with the SensArray+, you will need the following additional equipment:

- External Antennas – The SensArray+ has been qualified to run several industry standard antennas with gain between 5dB and 12dB. The SensArray+ can drive up to three external antennas.
- Cabling – The antennas connect to the SensArray+ through coaxial cabling with reverse polarity SMA connectors on one end for connecting to the SensArray's jacks and compatible connectors on the antenna end.

The SensArray+ can provide data and power ;

- External Devices – The SensArray can provide data to any device with a standard Ethernet connection through CAT5/6 cabling to an RJ45 input. If it is desired for the SensArray to provide power to remote devices, the attached device must be PD compliant with IEEE 802.3af or 802.3at.
- Cabling – CAT5/6 cabling with standard RF45 connectors should be used to connect the SensArray to external devices. We would recommend using standard Ethernet cables rather than crossover cable whenever possible.

## Specifications

Key specifications for the SensArray and SensArray+ are listed below.

The reader table refers to US specifications only. Reader models released for the other countries may have different power levels, frequency of operation, and channel spacing in compliance with local regulations where the product is sold.

### RFID READER Specifications

| | |
|---|---|
| Product Name | SensArray 32000 and SensArray 33111 |
| Operating Frequency | 902.75 MHz – 927.25 MHz |
| Hopping Channels | 50 |
| Channel Spacing | 500 KHz |
| Channel Dwell Time | < 0.4 seconds |
| RF Transmitter | < 30 dBm |

| | |
|---|---|
| Modulation Method | Phase Reversal – Amplitude Shift Keying (PR-ASK)<br>Double Side Band – Amplitude Shift Keying (DB-ASK) |
| 20 db Modulation Bandwidth | < 100 KHz |
| Power Consumption | 9 Watts when operational at 30dBm, 3W in standby |

# INTERNAL ANTENNA Specifications

| | |
|---|---|
| Operating Frequency | 902.75 MHz – 927.25 MHz<br>(FCC, other regions are different) |
| Polarization | Right-hand Circular |
| Gain | 8.5 dBiC |

# CONNECTIVITY Specifications

| | |
|---|---|
| Data Interface | TCP/IP (RJ-45) , 2 ports on 32000, 3 ports on 33111 |
| POE power inputs | RJ-45, 2 ports on 32000, 3 ports on 33111 |
| DC power input | 48VDC input on 33111 |
| LED Status Indicator | Flashes RED during booting, flashes green when operational |
| RJ45 Status Indicators | Green indicates full duplex when lit, half duplex when dark, Yellow indicates 100 MBS when lit, 10 MBS when dark |
| Software Support | APIs, DLL, sample code, executable demo GUI |
| Protocol | Comply with EPC Class 1 Gen 2 and 18000 – 6C |
| POE Port | Self-configuring, bidirectional PoE (Bi-PoE®), RJ45 standard |
| Power Consumption (30dBm Out) | Power into SensArray – 9W |
| Power Consumption (Idle) | Power into SensArray – 3W |
| Maximum daisy chain units | 6, assuming 25.5W POE into first unit, only one SensArray operational at any time, and average span length of 10 meters |

# PHYSICAL and ENVIRONMENTAL Specifications

| | |
|---|---|
| Dimensions | (cm) 25.4 x 25.4 x 2.0 • (in) 10 x 10 x 0.8 |
| Weight | Approximately 0.79 kg (1.73 lbs) |
| Operating Temperature | -20C to +45C (20% Duty Cycle) --- 50C for <5% average duty cycle |
| Maximum Duty Cycle | 50% at 35C, 30% at 45C, 20% at 50C |
| Operating Environment | Indoor operation only |
| Compliance Certifications | FCC Part 15; FCCID: P65ALRF800;<br>IOC: 4370A-ALRF800<br>UL 60950, CB Report |

# GPIO (General Purpose Input/Output)

The SensArray+ GPIO port provides for four control inputs and four outputs.

To use the GPIO, the SensArray+ should be connected to an external ground via pins 2 and/or 12.

Power to energize external devices can be sourced in two different ways.

First, external devices can be powered from the SensArray+ powered either through POE input, or the external 48VDC. This power can be delivered to the external device via pin 11, which provides 24 VDC to a maximum of 600 mA. Users should bear in mind that using power from the SensArray+ decreases the amount of power that can be provided to other POE devices connected to the SensArray+.

Alternatively, power for devices controlled by the SensArray+ can be provided externally, by connecting +24VDC to pin 1. Provided that the power source connected to pin 1 can meet the power needs of external devices, the power that can be provided to other POE devices connected is not reduced. Note, though, power provided by the +24VDC input does not provide power to the POE system. I.e., providing power to the GPIO can reduce or eliminate the load of the external devices from the POE power system, but cannot extend the POE power delivery capabilities.

# GPIO Pin-out Specifications

| | |
|---|---|
| Product Name | SensArray+ |
| Pin 1 | 24VDC External |
| Pin 2 | External ground |
| Pin 3 | External Output 1 |
| Pin 4 | External Output 2 |

| | |
|---|---|
| Pin 5 | External Output 3 |
| Pin 6 | External Output 4 |
| Pin 7 | External Input 1 (5-24VDC) |
| Pin 8 | External Input 2 (5-24VDC) |
| Pin 9 | External Input 3 (5-24VDC) |
| Pin 10 | External Input 4 (5-24VDC) |
| Pin 11 | +24V Internal<br>(maximum sourcing current 600 mA) |
| Pin 12 | External ground |

## Power Supplies

The SensArray and SensArray+ have been certified to operate in accordance with FCC or other national requirements when powered by an 802.3af compliant POE device capable of supplying 12.95 watts minimum and when powered by an 802.3at compliant POE device capable of supplying 25.5 watts minimum. This means that the unit may receive power from a Power over Ethernet enabled switch or the power injector listed below connected to any Ethernet port on the SensArray and SensArray+.

In addition, the SensArray+ may be powered through the +48VDC input.

Only the power supplies listed below may be used with the SensArray or SensArray+ readers. Operation with other power supplies is a violation of the conditions of the SensArray FCC license.

- SensArray, CORD PACK Power over Ethernet (PoE) Power Injector
- SensArray, CORD PACK 48 VDC AC/DC Power Supply

# Drawings and Block Diagrams

The SensArray and SensArray+ models share many common features and are identical in physical size. The SensArray has two Bi-PoE® Ethernet ports. The SensArray+ has more input/output capability. The following discussion is therefore predominantly applicable to the SensArray+.

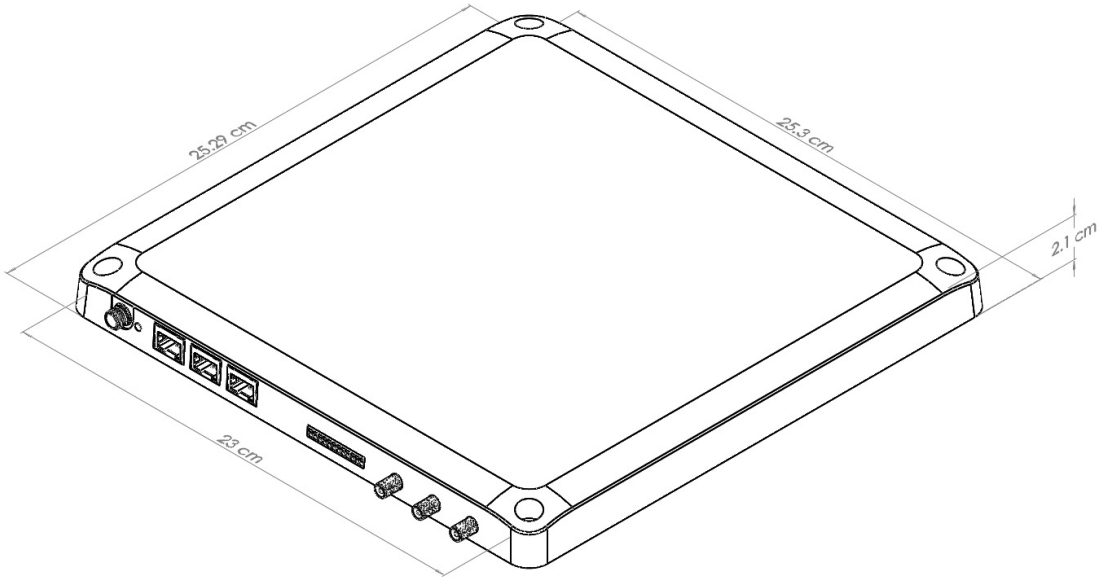


*Figure 1 Perspective view of the SensArray+*

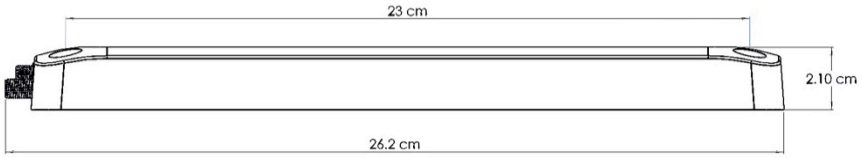


*Figure 2 Side view of the SensArray+*

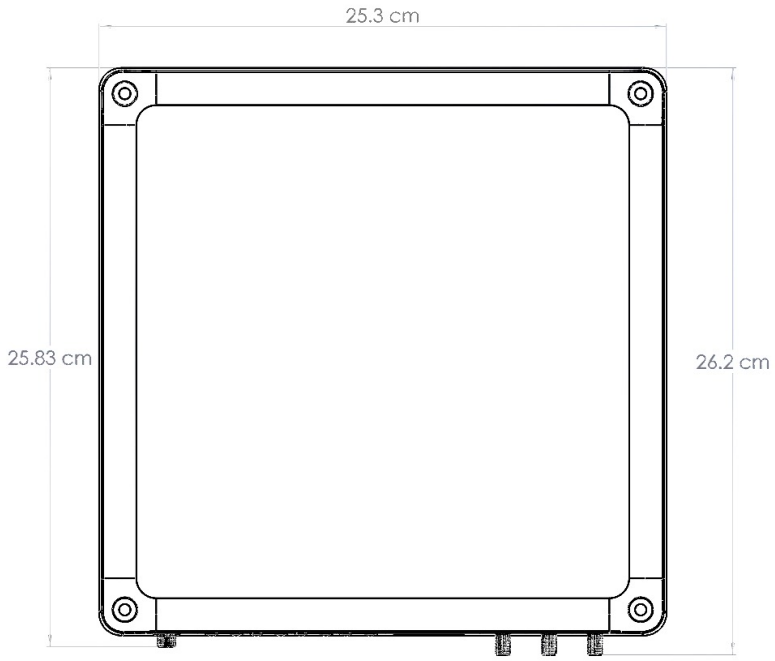


*Figure 3 Plan view of the SensArray+*

*Figure 4 A photograph of the top of the SensArray+.*

In Fig. 4, the various inputs and outputs of the SensArray+ can be seen. Starting from the left, the 48VDC input, the LED indicator light, 3 Bi-PoE® Ethernet ports, the 12-pin GPIO interface, and 3 reverse-polarity SMA connectors for external antennas.

*Figure 5 A closer look at the 48V input, the indicator LED and the Ethernet ports.*

Fig. 5 shows greater detail. The LED is an indicator of device state. During the boot process, the LED flashes red. When the device is fully operational, the LED flashes green.

The Ethernet ports also have two indicator lights. The indicator to the left describes the bit rate capability of the port (10Mb/s is not illuminated, 100Mb/s is yellow). The indicator to the right describes the duplex state of the port (1/2 duplex is not illuminated; full duplex is green).

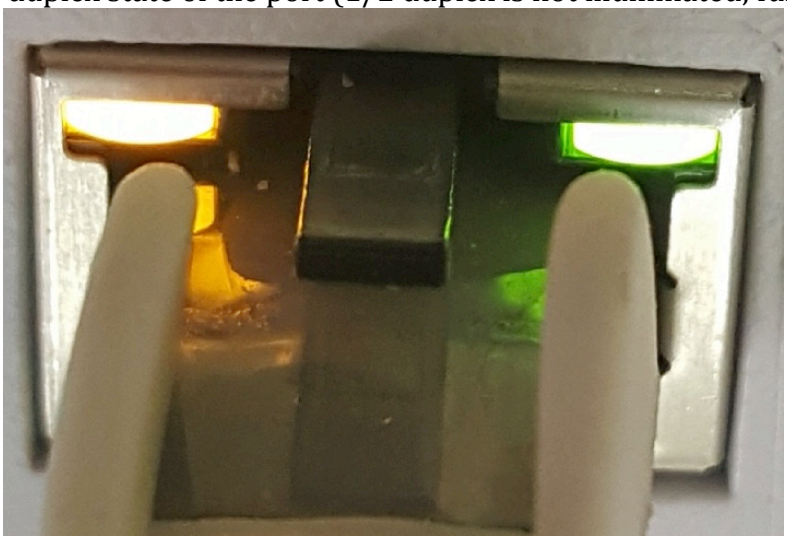

*Figure 6 An Ethernet port operating at 100Mb/s, as shown by the yellow indicator light in the upper left, and full duplex mode, as shown by the green indicator light in the upper right.*

*Figure 7 The GPIO port.*

Wires, recommended 20-26 AWG, are inserted into the round openings. To remove the wires, a small tool is inserted into the rectangular slot above, allowing the wired to be easily pulled out. Pin 1 is marked at the far left.

*Figure 8 The three reverse-polarity SMA connectors for external antennas.*

## SensArray Block Diagram

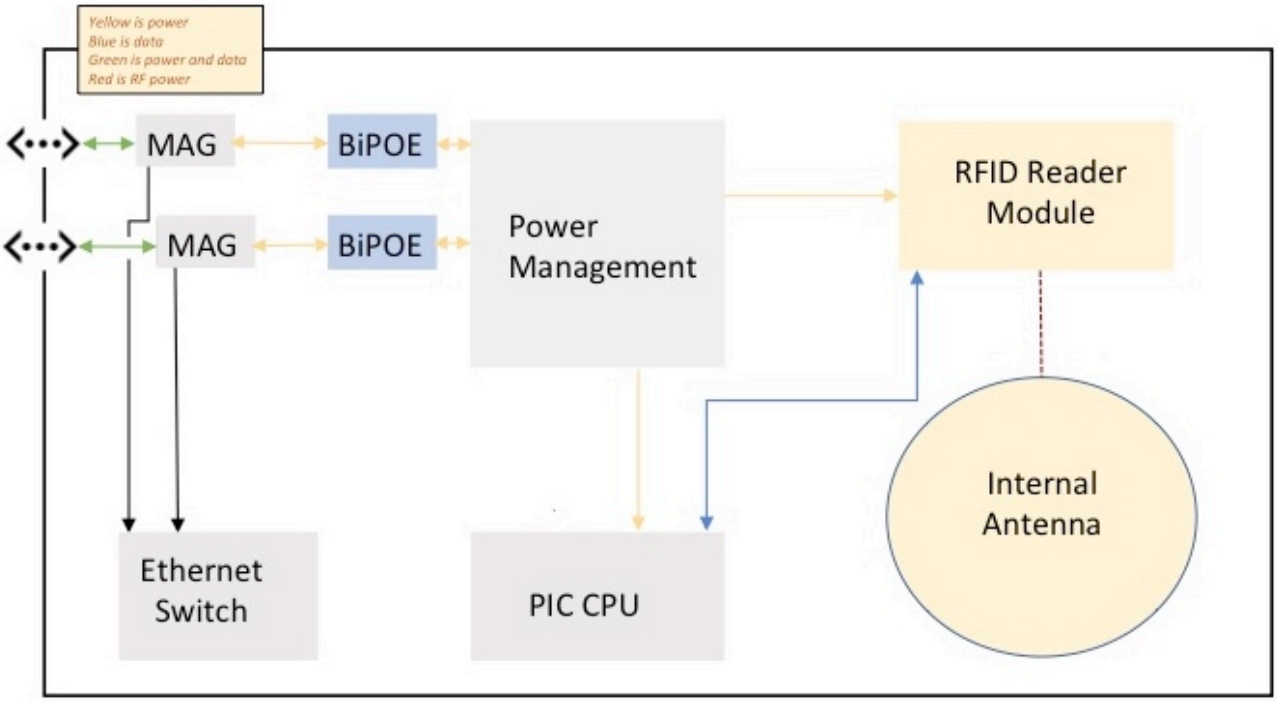


*Figure 9 The block diagram of the SensArray 32000*

## SensArray+ Block Diagram

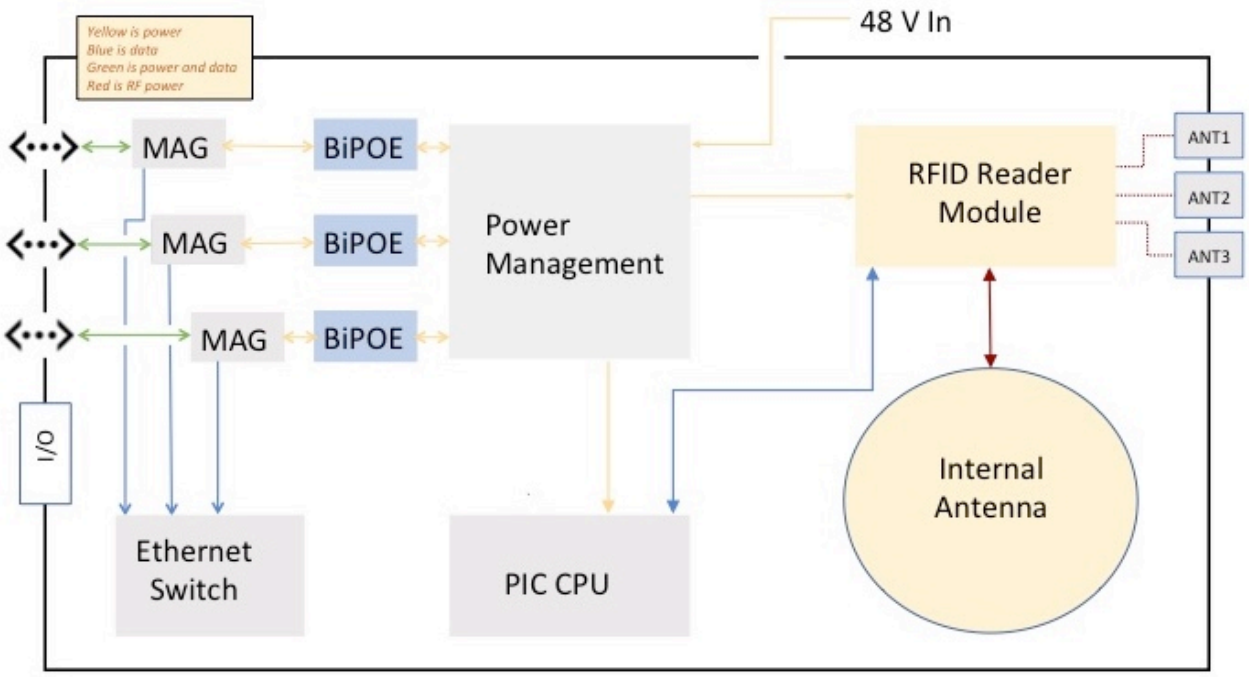


*Figure 10 The block diagram of the SensArray+*

# CHAPTER 2 Installation and Operation

This chapter describes basic operation for the SensArray and SensArray+.

## Receiving the unit

The SensArray is shipped as a single unit.

## Connecting to the Unit

The SensArray may be powered in two complementary ways. First, both of the Bi-PoE® ports will accept power from a standard POE enabled Ethernet switch, attached to Bi-PoE® port 1 or port 2 or both. Second, both of the Bi-PoE® ports may be powered using the SensArray, CORD PACK Power over Ethernet (PoE) Power Injector.

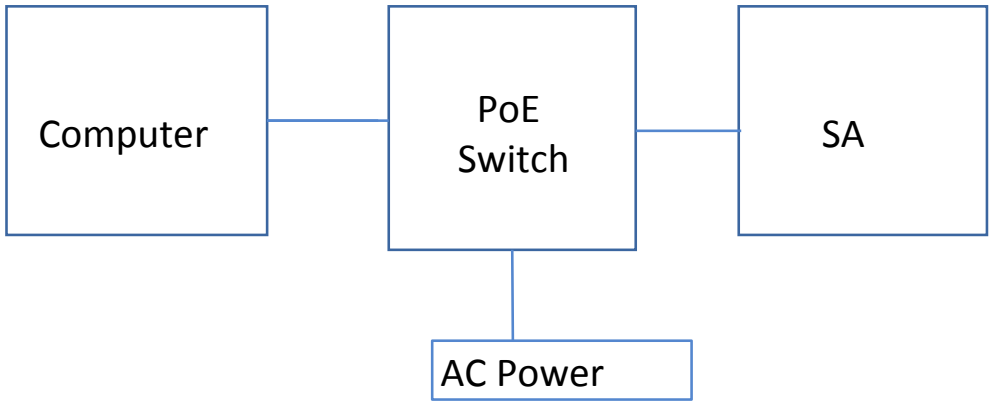


*Figure 11 Using a POE switch to provide power to the SensArray. A power injector may be substituted for the PoE switch.*

The SensArray+ may be powered in several ways. First, the Bi-PoE® ports will accept power from a standard POE enabled Ethernet switch, attached to PoE+ port 0, port 1 or port 2. Second, any of the PoE+ ports may be powered using the SensArray, CORD PACK Power over Ethernet (PoE) Power Injector. Third, the 48VDC input can supply power to the unit.

It is strongly suggested that new users of the SensArray+ initially control the unit with the provided GUI. The GUI software is available for download from SensThys, Inc. The GUI can be loaded onto any computer running Windows 7, 8 or 10.

The computer should be connected to the SensArray+ in one of three ways. The computer can connect to a standard POE switch, which is plugged into local AC power, with one output of the switch connected to the unit.

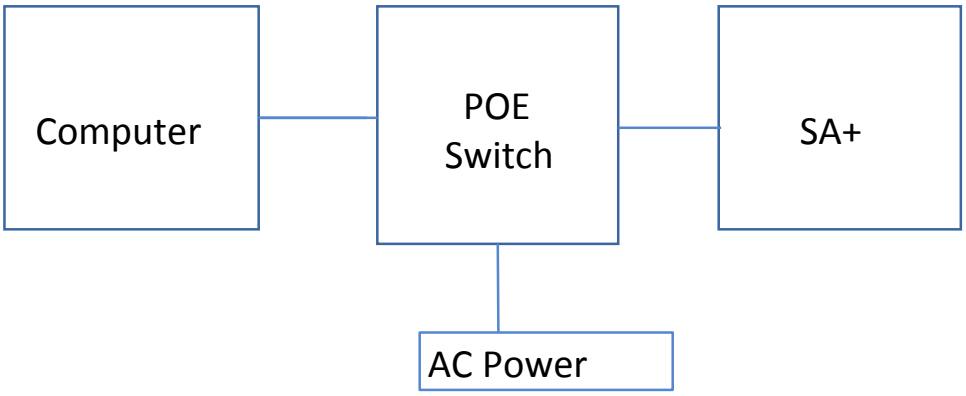


*Figure 12 Using a POE switch to provide power to the SensArray+. A PoE injector may be substituted for the switch.*

Finally, the computer can directly connect to the unit and the 48VDC supply connected to the unit to supply power.

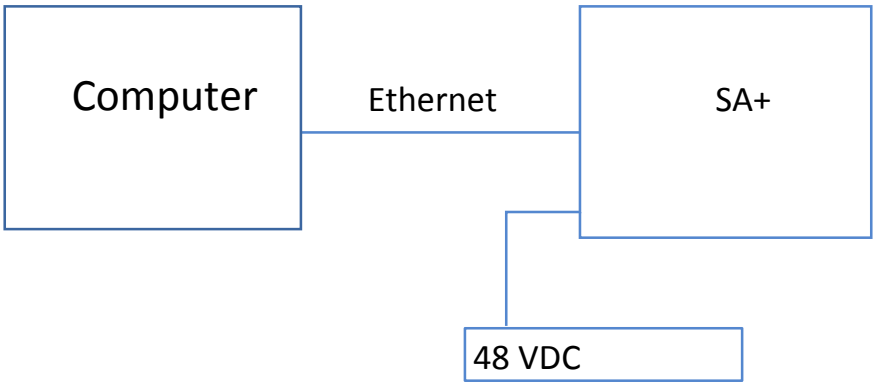


*Figure 13 Using 48 VDC to provide power to the SensArray+.*

## Start-Up

At this point, the GUI should be launched. The POE switch or injector commences the hand-shaking procedure with the unit, culminating in the SensArray+ being fully powered. Next, the CPU boots up, setting up its power architecture and becoming ready for operation.

During the power up and boot process, the primary status indicator LED will flash red. Once booted, the LED will flash green.

*Figure 14 A SensArray+ in the process of booting. The LED flashes red.*

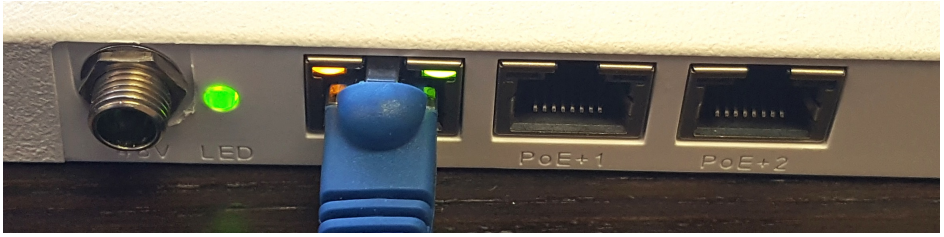


*Figure 15 The SensArray+ has finished booting and is ready for operation. The LED is flashing green.*

## Operation with SensArray GUI

It is strongly suggested that new users of the SensArray or SensArray+ initially control the unit with the SensArray GUI. The GUI software is available for download sensthys.com/support. The GUI can be loaded onto any computer using Windows 7, 8 or 10.

To begin, the GUI, called "Tester Setup.exe" is brought onto the computer and launched. This begins the process of loading the software onto the computer. The program should be launched at this point. For convenience, the user may want to place an icon on the desktop of the computer.

Once the program is up and running this screen should be visible.

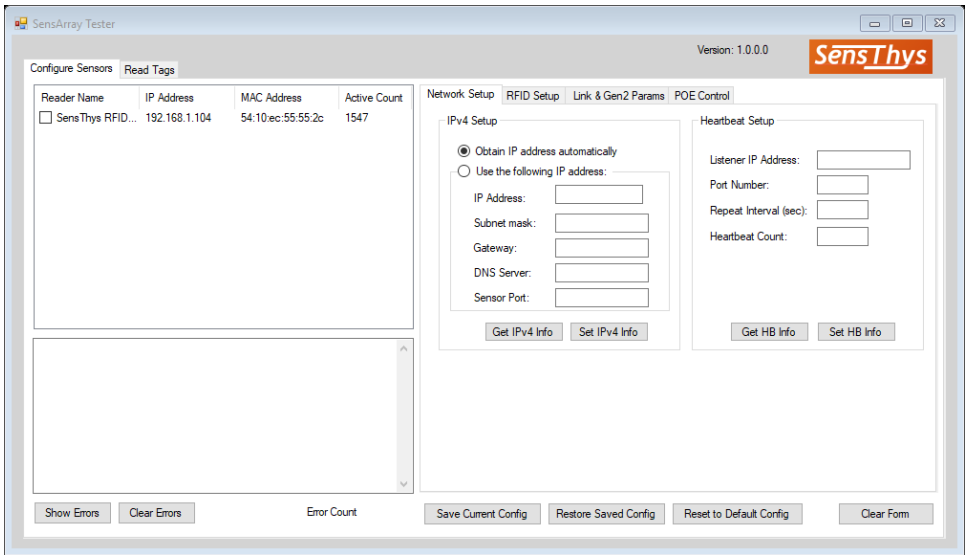


*Figure 16 The main screen of the GUI.*

The GUI will display all SensArray or SensArray+ units on the network. Select the unit you wish to operate and control by clicking on that line. The GUI will then display IP address, subnet mask, etc.

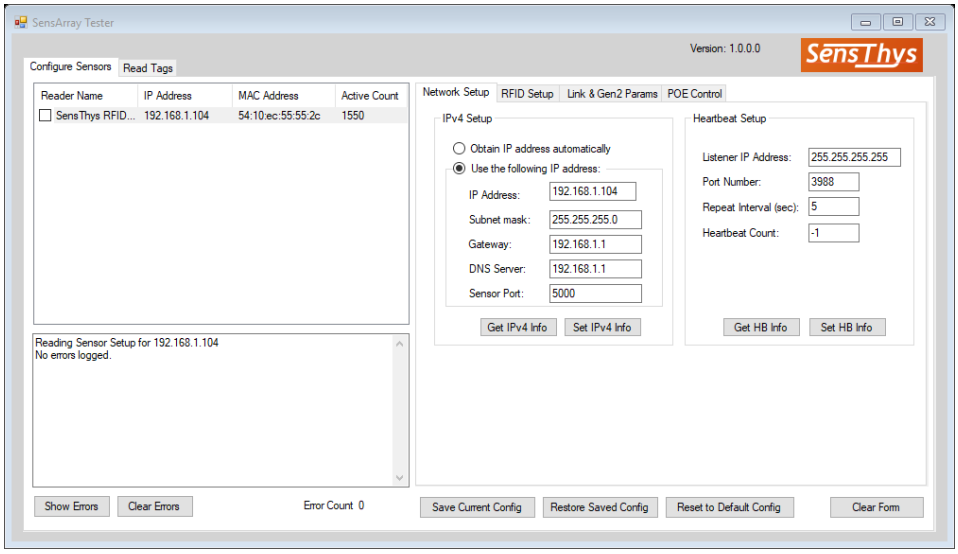


*Figure 17 After selecting the unit to control, the GUI shows the network setup for that unit.*

Next, click on the RFID Setup tab. This page has three sections: antenna power, antenna sequencing, and temperature management. By default, the Antenna power tab is shown first. As a note, the SensArray only has one antenna, the internal antenna. The SensArray+ has four antennas: the internal antenna, and three external antennas.

To begin, we will use a 30 dBm output power. If you are controlling a SensArray+ unit and wish to have the same power delivered to all antennas, you can do that by checking the box. At this point, click on the button to update power settings.

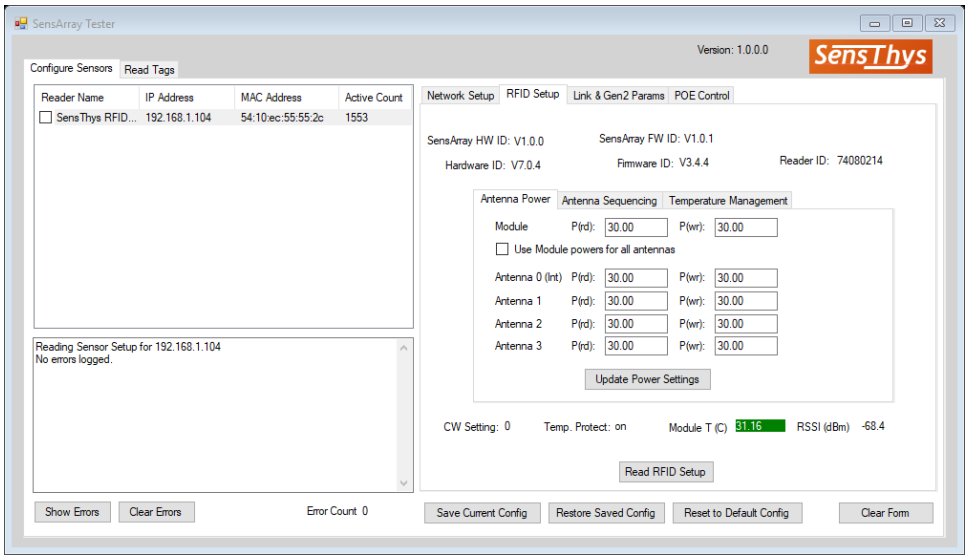


*Figure 18 The antenna power menu within RFID setup.*

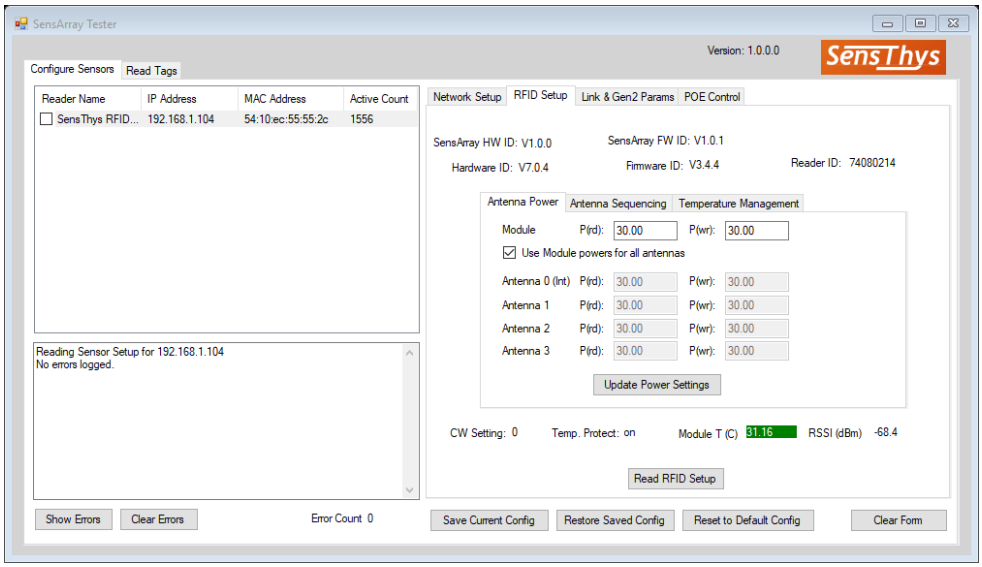


*Figure 19 Choosing to drive all antennas of the SensArray+ with the same power level.*

The next action is to program the order and timing of the power delivery to the antennas. To do this, first click on the tab labeled “Antenna Sequencing”.

Antenna sequencing has four components. The first is programming the read time in milliseconds. The second is the gap time, or the time period where no power is being delivered. The third is the number of antennas in a test sequence.

In the example below, the read time is 500ms, the gap time is 500ms, there are four antennas in the sequence, and the order of the sequence is 1 → 2 → 3 → 4.

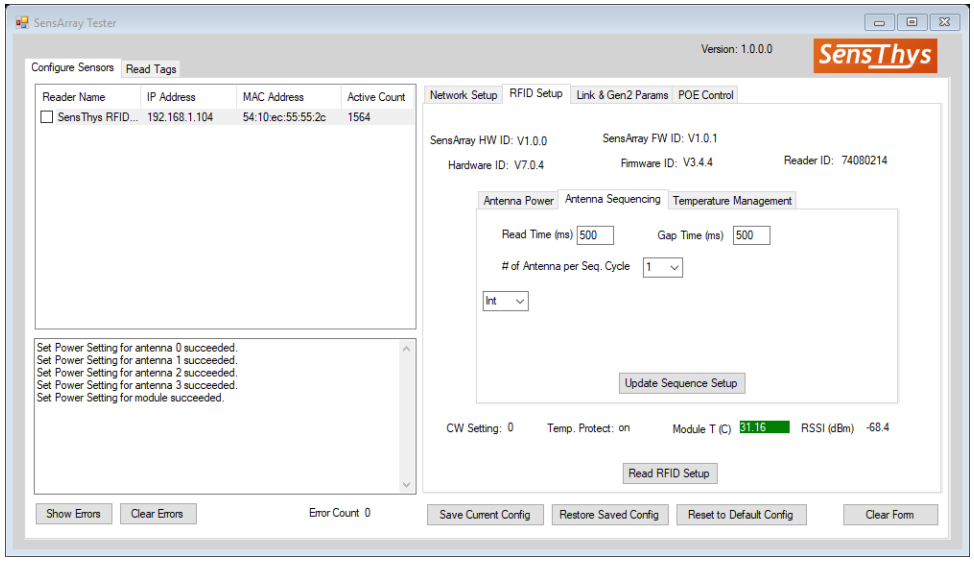


*Figure 20 The power settings for the antennas have been set, and the GUI is now on the menu for Antenna Sequencing.*

For the first operation of your unit, we suggest 500ms read, 500ms gap, only one antenna in operation and using the internal antenna. NOTE: On the SensArray, the only antenna available is the internal antenna.

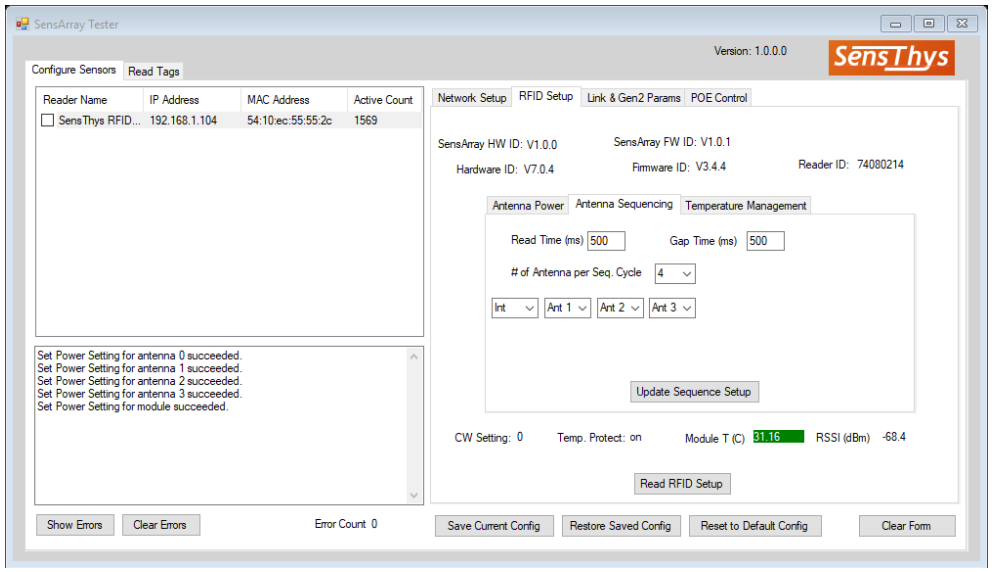


*Figure 21 An antenna sequence, 500ms read, 500ms gap, four antennas in the sequence, with firing order int, Ant 1, Ant 2, Ant3.*

***CAUTION! Do not operate any external antenna port (Ant 1, Ant 2, or Ant 3) without connecting an antenna to the port.***

At this point, you are ready to go! Place an RFID tag, or tags, in front of the unit. In the upper left, click on the "Read Tags" tab. At the bottom of that screen, click on the "Read Continuous" tab. The unit will then begin moving through its test sequence displaying results.

The results show the "Total Read" which is the total number of read events. In addition, for each antenna in the sequence of testing, the tag EPC and RSSI (Return Signal Strength Indicator) and the number of times the tag has been counted are shown.

This page also shows module temperature, in degrees C, and total read time. The right portion of the page shows system messages and notifications.

To stop reading tags, click on "Stop".

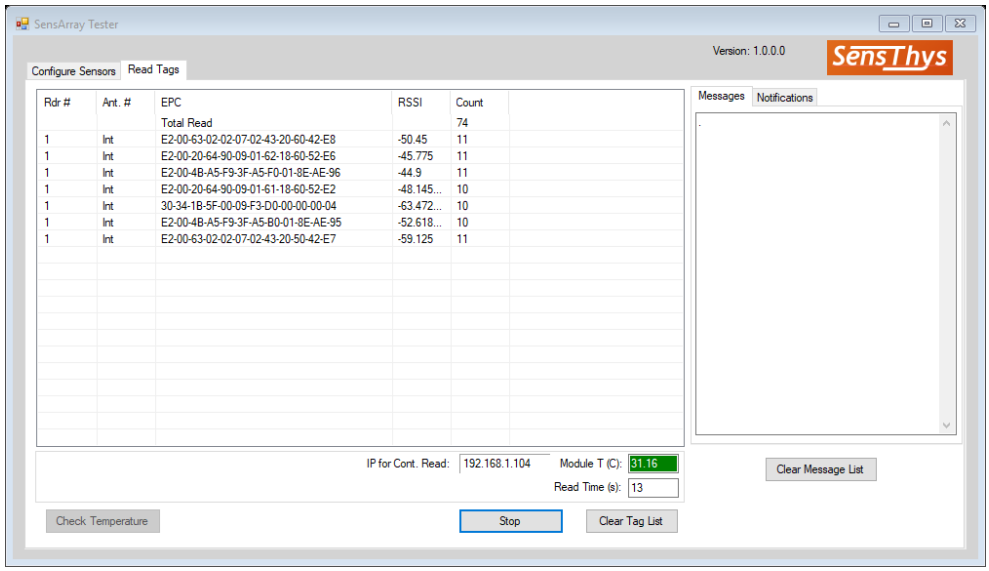


*Figure 22 The "Read Tag" section. The antenna(s) in operation, with the tags being read, are shown.*

The “Config Sensor” tab has two additional tabs for advanced users. The first is “Link and Gen2 Parameters”. This page provides lower level information about the specifics of RFID operation.

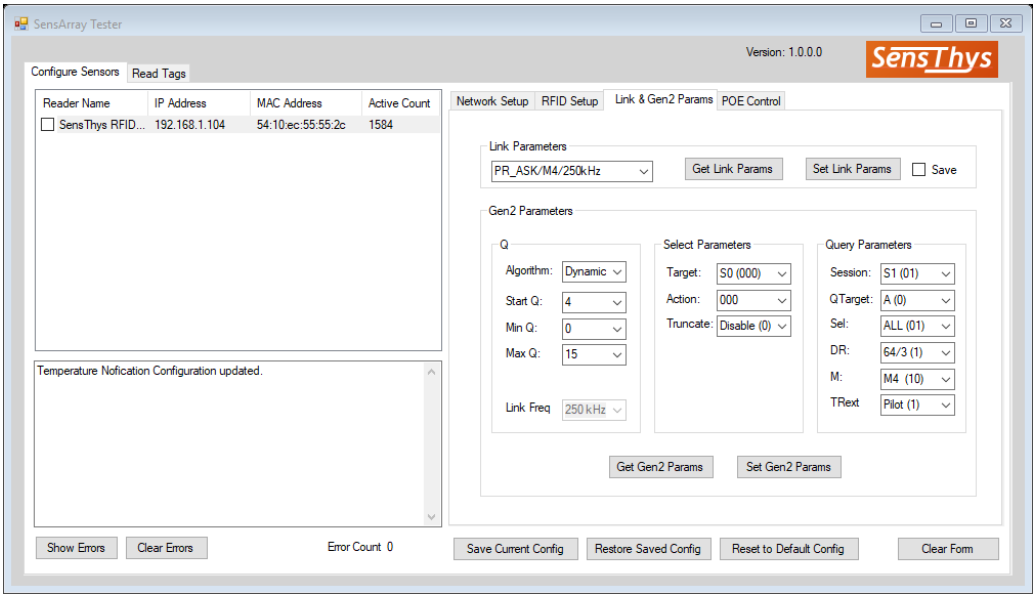


*Figure 23 The Link and Gen2 Parameter menu.*

The final tab discusses the POE and GPIO architecture. The SensArray has significant power distribution and control capability. The POE Control tab provides the user with an overview of power flows into and out of the unit.

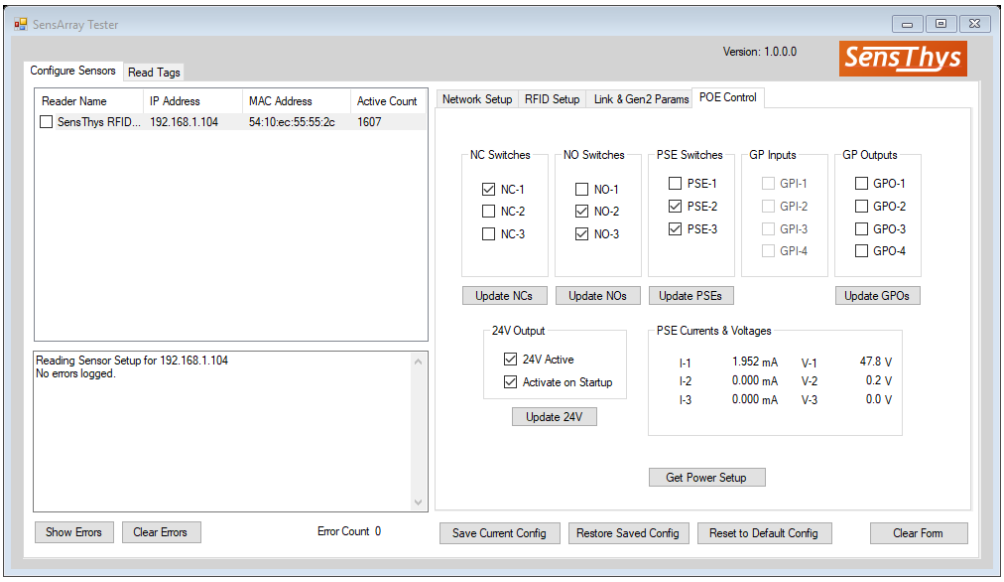


*Figure 24 The POE Control tab. The status of the POE and GPIO systems are shown.*

# Chapter 3 Bi-Directional Power over Ethernet (Bi-PoE®) System

## Concept

In many industrial situations, the delivery of power to remote appliances requires the costly installation of long runs of conduit. This often leads to the expense of powering a network of devices or sensors being substantially more than the cost of the appliances. In addition, power delivery to sensors, even mission critical ones, is typically not redundant, i.e., if one wire is cut or one circuit goes down, all of the devices powered on that circuit go down. Bi-PoE® eliminates the need for conduit and allows the user to utilize multiple sources of power to dramatically improve system reliability. The power switching architecture of the SensArray provides for a convenient and reliable network of powered sensors and devices.

## Power Distribution

Prior to any power arriving at the unit, every Bi-PoE® port is configured to accept power. When any of the ports proceeds through the handshaking operation and receives power, or

power is delivered to the SensArray+ via the 48VDC input, the remaining ports are automatically reconfigured to deliver power.

The most convenient way to think of this is that the device hardware makes every possible port available to receive power when in the "off" state. Once any source of power is identified, the other ports are configured to be able to deliver power.

As will be discussed later, the Bi-PoE® ports, regardless of configuration, retain all data transfer characteristics of standard Ethernet ports, including bi-directional transfer of data.

The power within a Bi-PoE® network progresses away from power sources as each SensArray finds its power source and subsequently makes that power available to other network devices. This powering of a network of PoE devices is fully autonomous and requires no user supervision.

From time to time, the power source of a SensArray may be disconnected or fail. In this event, the SensArray returns to the status where all ports are looking for incoming power. In network architectures with multiple sources of power, a network of SensArrays can in fact repower some or all the devices that were being provided power by the failed circuit.

A full description of the utility of this power distribution is beyond the scope of this document. Please contact SensThys directly for a presentation on this topic entitled "High Reliability PoE Networks".

## Networking with the SensArray

Each Bi-PoE® port has full Ethernet capability. The SensArray is designed for daisy-chain operation, while the SensArray+ allows for star and mesh networking architectures.

# Chapter 4 Thermal Management

The SensArray provides great flexibility in the design of RFID detection, including antenna sequencing, pulse power and duration, and pulse train specifics. As the radio is quite powerful, the small form factor SensArray does heat up during operation.

The RFID module within the SensArray continually monitors thermal performance. Starting at a temperature of ~60C, the module begins to gradually decrease the duty cycle of the pulse train. At 85C, the module will power down to avoid thermal damage.

The temperature rise of the SensArray has a thermal time constant of approximately 6 minutes, allowing for quite long pulse durations if desired.

To aid the user in the design of the RFID pulse train, the following graph shows maximum suggested ambient temperature suitable for the SensArray as a function of the peak output power (dBm) and overall duty cycle.

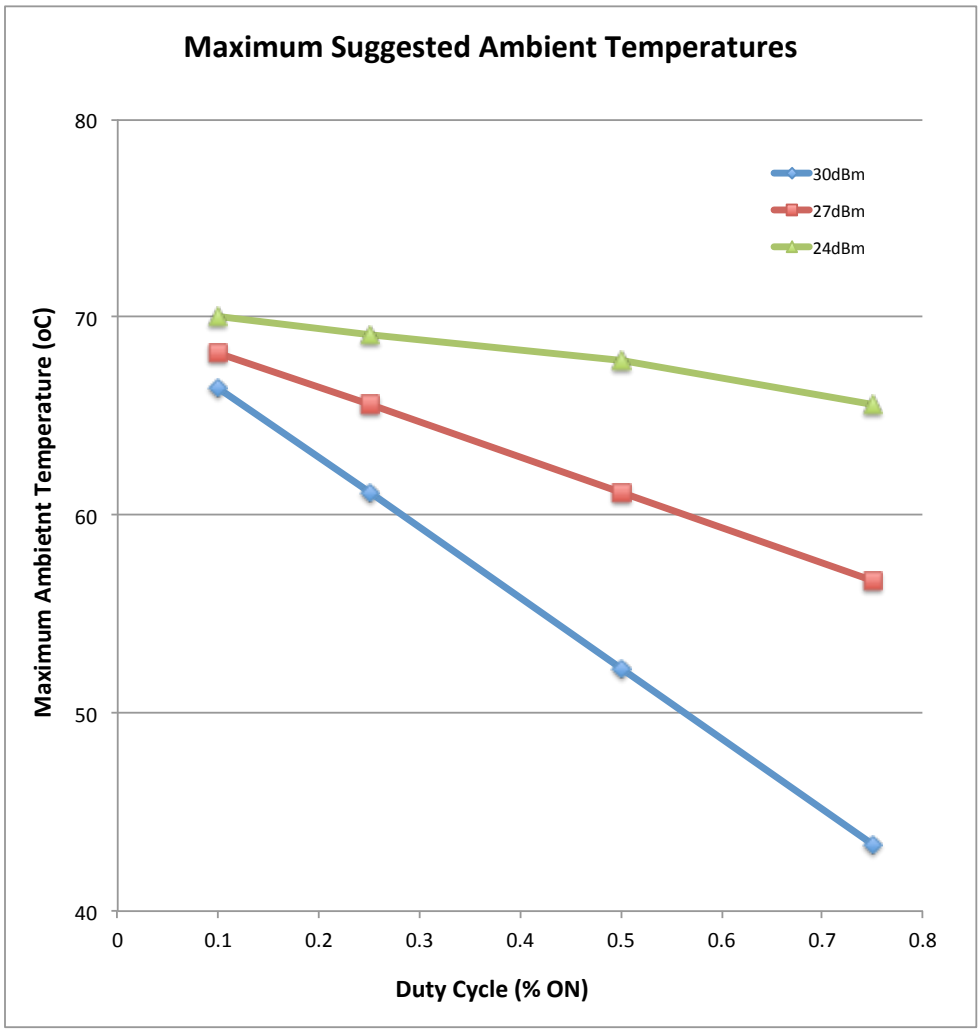


*Figure 25 The maximum ambient temperature for the SensArray*

## Glossary of Terms

POE – Power over Ethernet. An IEEE standard for providing device power over standard CAT5/6 cabling.

Power Injector – A device that plugs into AC power and has an output over CAT5/6 that can be connected to an Ethernet port to provide power. The SensArray allows Power Injectors to be connected to any Ethernet port.

RFID – Radio Frequency Identification

RSSI – Return Signal Strength Indicator. A measure of the power returned from a tag.

Bi-PoE® – Bidirectional Power over Ethernet. The proprietary and patented POE system that allows each Ethernet port on the sensor to automatically configure into a state of either accepting power or delivering power through the Ethernet cable.