FCC RADIO TEST REPORT
FCC ID: 2ANV3-PINEBOOKPRO

Product： PINEBOOK Pro

Trade Mark： PINE64

Model Name： 14″ PINEBOOK Pro LINUX LAPTOP

Family Model： N/A

Report No.： S19051404305004

Prepared for

Pine Microsystems

4727 Paseo Padre Parkway Fremont, CA 94555 USA

Prepared by

Shenzhen NTEK Testing Technology Co., Ltd.
1/F, Building E, Fenda Science Park, Sanwei Community,
Xixiang Street Bao'an District, Shenzhen 518126 P.R. China
Tel.: +86-755-6115 6588
Fax.: +86-755-6115 6599
Website:http://www.ntek.org.cn

TEST RESULT CERTIFICATION

Applicant's name ..... : Pine Microsystems

Address ..... : 4727 Paseo Padre Parkway Fremont, CA 94555 USA

Manufacturer's Name ..... : ShenZhen TianheZhiYan Science and technology Devecopemen Co., LTD

Address ..... : Room113.Zixinda.Building, NO.1053, Baoyuan Road, XiXiang Sub-district, Bao an Distric, Shenzhen, China

Product description

Product name ..... : PINEBOOK Pro

Model and/or type reference : 14″ PINEBOOK Pro LINUX LAPTOP

Family Model..... : N/A

Standards ..... : FCC Part15.407

Test procedure ..... ANSI C63.10-2013 and KDB 789033 D02 General UNII Test Procedures New Rules v02r01

FCC KDB 905462 D02 UNII DFS Compliance Procedures New Rules v02

This device described above has been tested by NTEK, and the test results show that the equipment under test (EUT) is in compliance with the FCC requirements/ the Industry Canada requirements.. And it is applicable only to the tested sample identified in the report.

This report shall not be reproduced except in full, without the written approval of NTEK, this document may be altered or revised by NTEK, personnel only, and shall be noted in the revision of the document.

Date of Test .....

Date (s) of performance of tests ..... Oct. 12, 2019 ~ Nov. 11, 2019

Date of Issue..... Nov. 11, 2019

Test Result..... **Pass**

Testing Engineer : Jerry Xie

(Jerry Xie)

Technical Manager : Jason chen

(Jason Chen)

Authorized Signatory : Sam. Chen

(Sam Chen)

Table of Contents

	Page
1. SUMMARY OF TEST RESULTS	7
1.1 FACILITIES AND ACCREDITATIONS	8
1.2 MEASUREMENT UNCERTAINTY	8
1 . GENERAL INFORMATION	9
1.1 GENERAL DESCRIPTION OF EUT	9
1.2 DESCRIPTION OF TEST MODES	11
1.3 BLOCK DIGRAM SHOWING THE CONFIGURATION OF SYSTEM TESTED	12
1.4 DESCRIPTION OF SUPPORT UNITS(CONDUCTED MODE)	13
1.5 EQUIPMENTS LIST FOR ALL TEST ITEMS	14
2 . EMC EMISSION TEST	16
2.1 CONDUCTED EMISSION MEASUREMENT	16
2.1.1 APPLICABLE STANDARD	16
2.1.2 CONFORMANCE LIMIT	16
2.1.3 TEST CONFIGURATION	16
2.1.4 TEST PROCEDURE	16
2.2 RADIATED EMISSION MEASUREMENT	19
2.2.1 APPLICABLE STANDARD	19
2.2.2 CONFORMANCE LIMIT	19
2.2.3 MEASURING INSTRUMENTS	19
2.2.4 TEST CONFIGURATION	20
2.2.5 TEST PROCEDURE	21
2.2.6 TEST RESULTS (9KHZ – 30 MHZ)	22
2.2.7 TEST RESULTS (30MHZ – 1GHZ)	23
2.2.8 TEST RESULTS (1GHZ-18GHZ)	31
2.2.9 TEST RESULTS (18GHZ-40GHZ)	36
3 . POWER SPECTRAL DENSITY TEST	45
3.1 APPLIED PROCEDURES / LIMIT	45
3.2 TEST PROCEDURE	46
3.3 DEVIATION FROM STANDARD	46
3.4 TEST SETUP	46
3.5 EUT OPERATION CONDITIONS	46
3.6 TEST RESULTS	47
4 . 26DB & 99% EMISSION BANDWIDTH	48
4.1 APPLIED PROCEDURES / LIMIT	48
4.2 TEST PROCEDURE	48
4.3 EUT OPERATION CONDITIONS	49
4.4 TEST RESULTS	50

Table of Contents

Page

5 . MINIMUM 6 DB BANDWIDTH 51
5.1 APPLIED PROCEDURES / LIMIT 51
5.2 TEST PROCEDURE 51
5.3 DEVIATION FROM STANDARD 51
5.4 TEST SETUP 51
5.5 EUT OPERATION CONDITIONS 51
5.6 TEST RESULTS 52

6 . MAXIMUM CONDUCTED OUTPUT POWER 53
6.1 PPLIED PROCEDURES / LIMIT 53
6.2 TEST RESULTS 55

7 . OUT OF BAND EMISSIONS 56
7.1 APPLICABLE STANDARD 56
7.2 TEST PROCEDURE 56
7.3 DEVIATION FROM STANDARD 56
7.4 TEST SETUP 56
7.5 EUT OPERATION CONDITIONS 57
7.6 TEST RESULTS 58

9.SPURIOUS RF CONDUCTED EMISSIONS 59
9.1CONFORMANCE LIMIT 59

10.1 LIMIT 60
10.2 TEST PROCEDURES 60
10.3 TEST SETUP LAYOUT 60
10.4 EUT OPERATION DURING TEST 60
10.5 TEST RESULTS 61

11. DYNAMIC FREQUENCY SELECTION(DFS) 73
11.1 APPLICABILITY OF DFS REQUIREMENTS 73
11.2 INTERFERENCE THRESHOLD VALUES, MASTER OR CLIENT INCORPORATING IN-SERVICE MONITORING 73
11.3 DFS RESPONSE REQUIREMENT VALUES 74
11.4 SHORT PULSE RADAR TEST WAVEFORMS 74
11.5 CALIBRATION SETUP AND DFS TEST RESULTS 75
11.6 CONDUCTED CALIBRATION SETUP 75
11.7 RADAR WAVEFORM CALIBRATION RESULT 76
11.8 IN-SERVICE MONITORING: CHANNEL MOVE TIME, CHANNEL CLOSING TRANSMISSION TIME AND NON-OCCUPANCY PERIOD 77
11.9 RESULT OF CHANNEL MOVE TIME, CHANNEL CLOSING TRANSMISSION TIME

Table of Contents

Page

AND NON-OCCUPANCY PERIOD FOR CLIENT BEACON TEST 78

12. ANTENNA REQUIREMENT 79

12.1 STANDARD REQUIREMENT 79

12.2 EUT ANTENNA 79

13. TEST RESULTS 80

13.1 DUTY CYCLE 80

13.2 MAXIMUM CONDUCTED OUTPUT POWER 112

13.3 OCCUPIED CHANNEL BANDWIDTH 114

13.4 MAXIMUM POWER SPECTRAL DENSITY LEVEL 184

13.5 BAND EDGE 216

13.6 CONDUCTED RF SPURIOUS EMISSION 242

13.7 CALIBRATION 275

13.8 NON-OCCUPANCY 278

13.9 SHUTDOWN TIME 279

Revision History

Report No.	Version	Description	Issued Date
S19051404305004	Rev.01	Initial issue of report	Nov 11, 2019

1. SUMMARY OF TEST RESULTS

Test procedures according to the technical standards:

FCC Part15 (15.407) , Subpart E			
Standard Section	Test Item	Judgment	Remark
15.207	AC Power Line Conducted Emissions	PASS	
15.209(a), 15.407 (b)(1) 15.407 (b)(2) 15.407 (b)(3) 15.407 (b)(4) 15.407 (b)(6)	Spurious Radiated Emissions	PASS	
15.407 (a)	26 dB and 99% Emission Bandwidth	PASS	
15.407(e)	Minimum 6 dB bandwidth	PASS	
15.407 (a)	Maximum Conducted Output Power	PASS	
15.407 (b)(1) 15.407 (b)(2) 15.407 (b)(3) 15.407 (b)(4)	Band Edge	PASS	
15.407 (a)	Power Spectral Density	PASS	
15.407(b)	Spurious Emissions at Antenna Terminals	PASS	
15.407(h)	Dynamic Frequency Selection(DFS)	PASS	
15.203	Antenna Requirement	PASS	

NOTE:

(1)" N/A" denotes test is not applicable in this Test Report

(2) This device operates with a duty cycle greater than 98%

1.1 FACILITIES AND ACCREDITATIONS

FACILITIES

All measurement facilities used to collect the measurement data are located at 1/F, Building E, Fenda Science Park, Sanwei Community, Xixiang Street, Bao'an District, Shenzhen 518126 P.R. China.

The sites are constructed in conformance with the requirements of ANSI C63.7, ANSI C63.10 and CISPR Publication 22.

LABORATORY ACCREDITATIONS AND LISTINGS

Site Description

CNAS-Lab.	:	The Laboratory has been assessed and proved to be in compliance with CNAS-CL01:2006 (identical to ISO/IEC 17025:2005) The Certificate Registration Number is L5516.
IC-Registration		The Certificate Registration Number is 9270A. CAB identifier:CN0074
FCC- Accredited		Test Firm Registration Number: 463705. Designation Number: CN1184
A2LA-Lab.		The Certificate Registration Number is 4298.01 This laboratory is accredited in accordance with the recognized International Standard ISO/IEC 17025:2005 General requirements for the competence of testing and calibration laboratories. This accreditation demonstrates technical competence for a defined scope and the operation of a laboratory quality management system (refer to joint ISO-ILAC-IAF Communiqué dated 8 January 2009).
Name of Firm	:	Shenzhen NTEK Testing Technology Co., Ltd.
Site Location	:	1/F, Building E, Fenda Science Park, Sanwei Community, Xixiang Street, Bao'an District, Shenzhen 518126 P.R. China.

1.2 MEASUREMENT UNCERTAINTY

The reported uncertainty of measurement y±U, where expended uncertainty U is based on a standard uncertainty multiplied by a coverage factor of k=2, providing a level of confidence of approximately 95 %.

No.	Item	Uncertainty
1	Conducted Emission Test	±2.80dB
2	RF power, conducted	±0.16dB
3	Spurious emissions, conducted	±0.21dB
4	All emissions, radiated(30MHz~1GHz)	±2.64dB
5	All emissions, radiated(1GHz~6GHz)	±2.40dB
6	All emissions, radiated(＞6GHz)	±2.52dB
7	Temperature	±0.5°C
8	Humidity	±2%

1. GENERAL INFORMATION

1.1 GENERAL DESCRIPTION OF EUT

Equipment	PINEBOOK Pro
Trade Mark	PINE64
Model Name	14″ PINEBOOK Pro LINUX LAPTOP
FCC ID	2ANV3-PINEBOOKPRO
Product Description	

Mode Supported	☒802.11a ☒802.11n(HT20) ☒802.11n(HT40) ☒802.11ac(HT20) ☒802.11ac(HT40) ☒802.11ac(HT80)
Data Rate	802.11a: 6,9,12,18,24,36,48,54Mbps; 802.11n(HT20/HT40):MCS0-MCS15; 802.11ac(VHT20): NSS1, MCS0-MCS8 802.11ac(VHT40/VHT80):NSS1, MCS0-MCS9
Modulation	OFDM with BPSK/QPSK/16QAM/64QAM
Operating Frequency Range	☒ U-NII-1: 5150 MHz ~5250MHz ☒ U-NII-2A: 5250MHz~5350MHz ☒ U-NII-2C: 5470MHz~5725MHz ☒ U-NII-3: 5725 MHz ~5850 MHz
Function:	☐Outdoor AP ☐Indoor AP ☐Fixed P2P ☒Client
DFS type:	☐master devices ☐Slave devices with radar detection ☒Slave devices without radar detection
Antenna Type	FPCB antenna
Antenna Gain	2.93dBi

Based on the application, features, or specification exhibited in User's Manual, More details of EUT technical specification, please refer to the User's Manual.

Ratings	DC 3.8V from Battery or DC 5V from Adapter
Adapter	☒Adapter supply: Model:EE-0530-E Input: 100-240V~50/60Hz 0.5A Output: 5V⎓3000mA
Battery	DC 3.8V/10000mAh
Connecting I/O Port(s)	Please refer to the User's Manual
HW Version	N/A
SW Version	N/A

Note:

1. For a more detailed features description, please refer to the manufacturer's specifications or the User's Manual.
2. Frequency and Channel list:

Band	20MHz		40MHz		80MHz	
	Channel	Frequency	Channel	Frequency	Channel	Frequency
U-NII-1	36	5180 MHz	38	5190 MHz	42	5210 MHz
	40	5200 MHz	46	5230 MHz	-	-
	44	5220 MHz				
	48	5240 MHz				
U-NII-2A	52	5260 MHz	54	5270 MHz	58	5290 MHz
	56	5280 MHz	62	5310 MHz		
	60	5300 MHz				
	64	5320 MHz				
U-NII-2C	100	5500 MHz	102	5510 MHz	106	5530 MHz
	104	5520 MHz	110	5550 MHz	122	5610 MHz
	108	5540 MHz	118	5590 MHz		
	112	5560 MHz	126	5630 MHz		
	116	5580 MHz	134	5670 MHz		
	120	5600 MHz				
	124	5620 MHz				
	128	5640 MHz				
	132	5660 MHz				
	140	5700 MHz				
U-NII-3	149	5745 MHz	151	5755 MHz	155	5775 MHz
	153	5765 MHz	159	5795 MHz		
	157	5785 MHz				
	161	5805 MHz				
	165	5825 MHz				

1.2 DESCRIPTION OF TEST MODES

To investigate the maximum EMI emission characteristics generates from EUT, the test system was pre-scanning tested base on the consideration of following EUT operation mode or test configuration mode which possible have effect on EMI emission level. Each of these EUT operation mode(s) or test configuration mode(s) mentioned above was evaluated respectively.

Test Items	Mode	Data Rate	Channel	Ant
AC Power Line Conducted Emissions	Normal Link	-	-	-
Maximum Conducted Output Power	11a/n(20)/ac(20)	6 Mbps/ MCS0/ VHT1MCS0	36/40/48/52/56/64/100 /120/140/149/157/165	1
	11n(40)/ac(40)	MCS0/ VHT1MCS0	38/46/54/62/102/110 /118/134/151/159	1
	11ac(80)	MCS0/ VHT1MCS0	42/58/106/122/155	1
Power Spectral Density	11a/n(20)/ac(20)	6 Mbps/ MCS0/ VHT1MCS0	36/40/48/52/56/64/100 /120/140/149/157/165	1
	11n(40)/ac(40)	VHT1MCS0	38/46/54/62/102/110 /118/134/151/159	1
	11ac(80)	MCS0	42/58/106/122/155	1
26 dB and 99% Emission Bandwidth	11a/n(20)/ac(20)	6 Mbps/ MCS0/ VHT1MCS0	36/40/48/52/56/64/100 /120/140/149/157/165	1
	11n(40)/ac(40)	MCS0/ VHT1MCS0	38/46/54/62/102/110 /118/134/151/159	1
	11ac(80)	MCS0	42/58/106/122/155	1
Minimum 6 dB bandwidth	11a/n(20)/ac(20)	6 Mbps/ MCS0/ VHT1MCS0	36/40/48/52/56/64/100 /120/140/149/157/165	1
	11n(40)/ac(40)	VHT1MCS0	38/46/54/62/102/110 /118/134/151/159	1
	11ac(80)	MCS0	42/58/106/122/155	1
Radiated Emissions Below 1GHz	Normal Link	-	-	1
Radiated Emissions Above 1GHz	11a/n(20)/ac(20)	6 Mbps/ MCS0/ VHT1MCS0	36/40/48/52/56/64/100 /120/140/149/157/165	1
	11n(40)/ac(40)	VHT1MCS0	38/46/54/62/102/110 /118/134/151/159	1
	11ac(80)	MCS0	42/58/106/122/155	1
Band Edge Emissions	11a/n(20)/ac(20)	6 Mbps/ MCS0/ VHT1MCS0	36/40/48/52/56/64/100 /120/140/149/157/165	1
	11n(40)/ac(40)	MCS0/ VHT1MCS0	38/46/54/62/102/110 /118/134/151/159	1
	11ac(80)	MCS0	42/58/106/122/155	1
Dynamic Frequency Selection(DFS)	ac(80)	VHT1MCS0	58/106	1

Note:

(1) The measurements are performed at the highest, middle, lowest available channels.

(2) The measurements are performed at all Bit Rate of Transmitter, the worst data was reported

1.3 BLOCK DIGRAM SHOWING THE CONFIGURATION OF SYSTEM TESTED

For AC Conducted Emission Mode

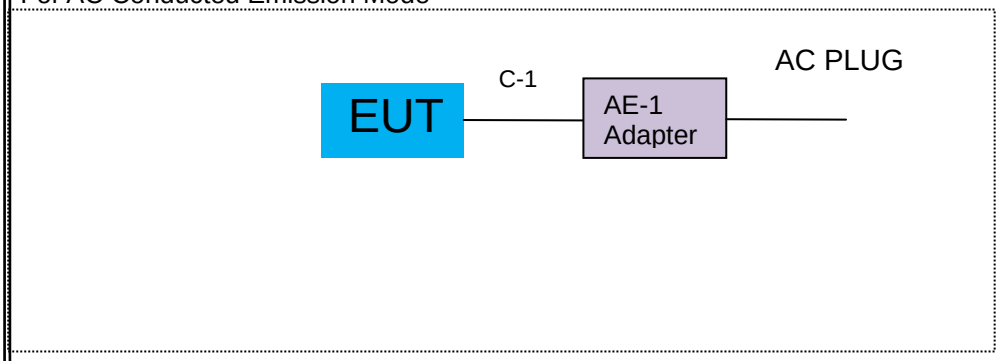

For Radiated Test Cases

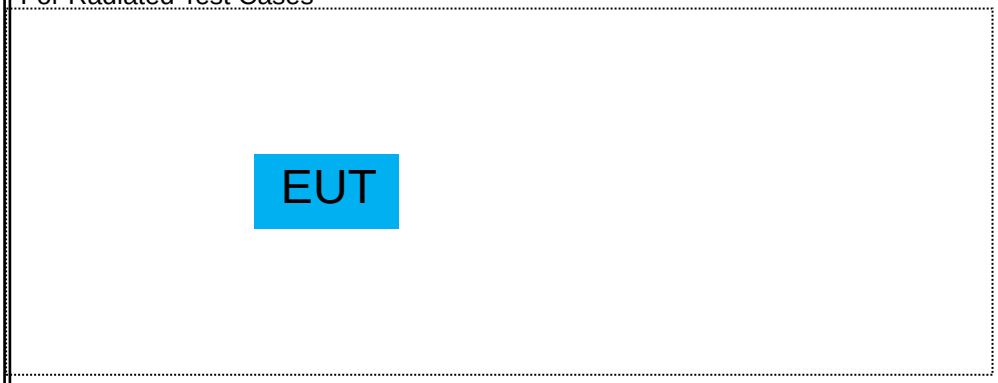

For Conducted Test Cases

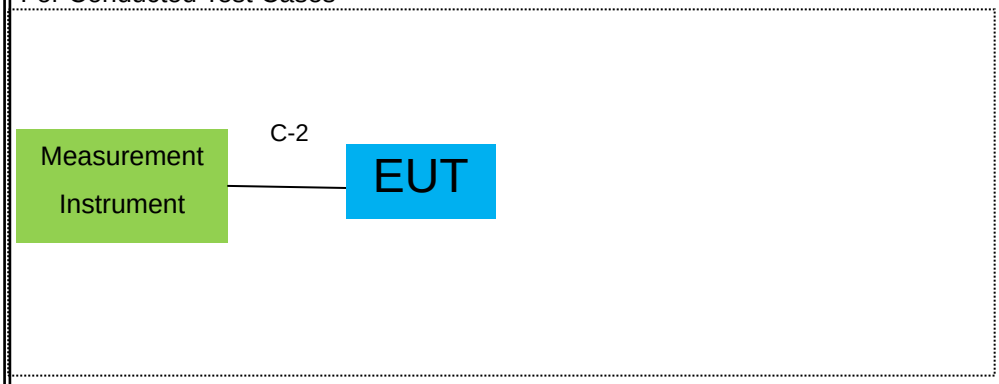

Note: 1. The temporary antenna connector is soldered on the PCB board in order to perform conducted tests and this temporary antenna connector is listed in the equipment list.

1. EUT built-in battery-powered, the battery is fully-charged.

1.4 DESCRIPTION OF SUPPORT UNITS(CONDUCTED MODE)

The EUT has been tested as an independent unit together with other necessary accessories or support units. The following support units or accessories were used to form a representative test configuration during the tests.

Item	Equipment	Brand	Model/Type No.	Series No.	Note
AE-1	Adapter	N/A	EE-0530-E	N/A	Peripherals

Item	Cable Type	Shielded Type	Ferrite Core	Length	Note
C-1	Power Cable	NO	NO	1.2m	
C-2	RF Cable	YES	NO	0.1m	

Note:

(1) The support equipment was authorized by Declaration of Confirmation.
(2) For detachable type I/O cable should be specified the length in cm in『Length』column.

1.5 EQUIPMENTS LIST FOR ALL TEST ITEMS

Radiation& Conducted Test equipment

Item	Kind of Equipment	Manufacturer	Type No.	Serial No.	Last calibration	Calibrated until	Calibration period
1	Spectrum Analyzer	Aglient	E4407B	MY45108040	2019.05.13	2020.05.12	1 year
2	Spectrum Analyzer	Agilent	N9020A	MY49100060	2019.08.28	2020.08.27	1 year
3	Spectrum Analyzer	R&S	FSV40	101417	2019.08.28	2020.08.27	1 year
4	Test Receiver	R&S	ESPI7	101318	2019.05.13	2020.05.12	1 year
5	Bilog Antenna	TESEQ	CBL6111D	31216	2019.04.15	2020.04.14	1 year
6	50Ω Coaxial Switch	Anritsu	MP59B	6200983705	2018.05.19	2020.05.18	2 year
7	Horn Antenna	EM	EM-AH-10180	2011071402	2019.04.15	2020.04.14	1 year
8	Broadband Horn Antenna	SCHWARZBECK	BBHA 9170	803	2018.12.11	2019.12.10	1 year
9	Amplifier	EMC	EMC051835SE	980246	2019.08.06	2020.08.05	1 year
10	Active Loop Antenna	SCHWARZBECK	FMZB 1519 B	055	2018.12.11	2019.12.10	1 year
11	Power Meter	DARE	RPR3006W	15I00041SNO84	2019.08.06	2020.08.05	1 year
12	Test Cable (9KHz-30MHz)	N/A	R-01	N/A	2017.04.21	2020.04.20	3 year
13	Test Cable (30MHz-1GHz)	N/A	R-02	N/A	2017.04.21	2020.04.20	3 year
14	High Test Cable(1G-40GHz)	N/A	R-03	N/A	2017.04.21	2020.04.20	3 year
15	High Test Cable(1G-40GHz)	N/A	R-04	N/A	2017.04.21	2020.04.20	3 year
16	Filter	TRILTHIC	2400MHz	29	2017.04.19	2020.04.18	3 year
17	temporary antenna connector (Note)	NTS	R001	N/A	N/A	N/A	N/A

Note:
We will use the temporary antenna connector (soldered on the PCB board) When conducted test
And this temporary antenna connector is listed within the instrument list

AC Conduction Test equipment

Item	Kind of Equipment	Manufacturer	Type No.	Serial No.	Last calibration	Calibrated until	Calibration period
1	Test Receiver	R&S	ESCI	101160	2019.05.13	2020.05.12	1 year
2	LISN	R&S	ENV216	101313	2019.04.15	2020.04.14	1 year
3	LISN	SCHWARZBECK	NNLK 8129	8129245	2019.05.13	2020.05.12	1 year
4	50Ω Coaxial Switch	ANRITSU CORP	MP59B	6200983704	2018.05.19	2020.05.18	2 year
5	Test Cable (9KHz-30MHz)	N/A	C01	N/A	2017.04.21	2020.04.20	3 year
6	Test Cable (9KHz-30MHz)	N/A	C02	N/A	2017.04.21	2020.04.20	3 year
7	Test Cable (9KHz-30MHz)	N/A	C03	N/A	2017.04.21	2020.04.20	3 year

Note: Each piece of equipment is scheduled for calibration once a year except the Test Cable& Aux Equipment which is scheduled for calibration every 3 years.

2. EMC EMISSION TEST

2.1 CONDUCTED EMISSION MEASUREMENT

2.1.1 APPLICABLE STANDARD

According to FCC Part 15.207(a)

2.1.2 CONFORMANCE LIMIT

Frequency(MHz)	Conducted Emission Limit	
	Quasi-peak	Average
0.15-0.5	66-56*	56-46*
0.5-5.0	56	46
5.0-30.0	60	50
Note: 1. *Decreases with the logarithm of the frequency 2. The lower limit shall apply at the transition frequencies 3. The limit decreases in line with the logarithm of the frequency in the range of 0.15 to 0.50MHz.		

2.1.3 TEST CONFIGURATION

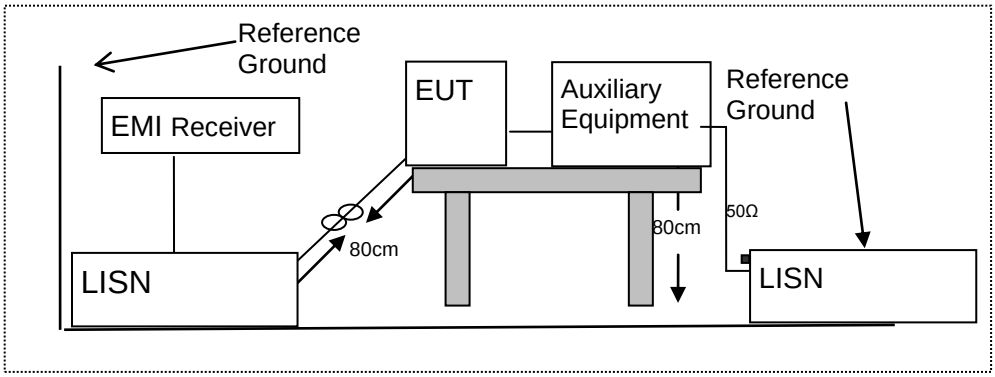

2.1.4 TEST PROCEDURE

According to the requirements in Section 13.1.4.1 of ANSI C63.10-2013 Conducted emissions the EUT measured in the frequency range between 0.15 MHz and 30 MHz using CISPR Quasi-Peak and average detector mode.

1. The EUT was placed 0.4 meter from the conducting wall of the shielding room.
2. The EUT was placed on a table which is 0.8m above ground plane.
3. Connect EUT to the power mains through a line impedance stabilization network (LISN). All other support equipments powered from additional LISN(s). The LISN provide 50 Ohm/ 50uH of coupling impedance for the measuring instrument.
4. Interconnecting cables that hang closer than 40 cm to the ground plane shall be folded back and forth in the center forming a bundle 30 to 40cm long.
5. I/O cables that are not connected to a peripheral shall be bundled in the center. The end of the cable may be terminated, if required, using the correct terminating impedance. The overall length shall not exceed 1 m.
6. LISN at least 80 cm from nearest part of EUT chassis.
7. The frequency range from 150KHz to 30MHz was searched.
8. Set the test-receiver system to Peak Detect Function and specified bandwidth(IF bandwidth=9KHz) with Maximum Hold Mode
9. For the actual test configuration, please refer to the related Item –EUT Test Photos.

EUT：	PINEBOOK Pro	Model Name. ：	14″ PINEBOOK Pro LINUX LAPTOP
Temperature：	26 ℃	Relative Humidity：	56%
Pressure：	1010hPa	Phase：	L
Test Voltage ：	DC 5V from Adapter AC 120V/60Hz	Test Mode：	Mode 1

Frequency (MHz)	Reading Level (dBμV)	Correct Factor (dB)	Measure-ment (dBμV)	Limits (dBμV)	Margin (dB)	Remark
0.171	44.88	9.76	54.64	64.90	-10.26	QP
0.171	27.58	9.76	37.34	54.90	-17.56	AVG
0.230	40.17	9.76	49.93	62.44	-12.51	QP
0.230	25.08	9.76	34.84	52.44	-17.60	AVG
0.438	36.54	9.74	46.28	57.10	-10.82	QP
0.438	20.85	9.74	30.59	47.10	-16.51	AVG
0.562	32.16	9.74	41.90	56.00	-14.10	QP
0.562	21.56	9.74	31.30	46.00	-14.70	AVG
1.022	31.73	9.74	41.47	56.00	-14.53	QP
1.022	20.20	9.74	29.94	46.00	-16.06	AVG
8.514	41.31	9.95	51.26	60.00	-8.74	QP
8.514	26.42	9.95	36.37	50.00	-13.63	AVG

Remark:

1. All readings are Quasi-Peak and Average values.
2. Factor = Insertion Loss + Cable Loss.

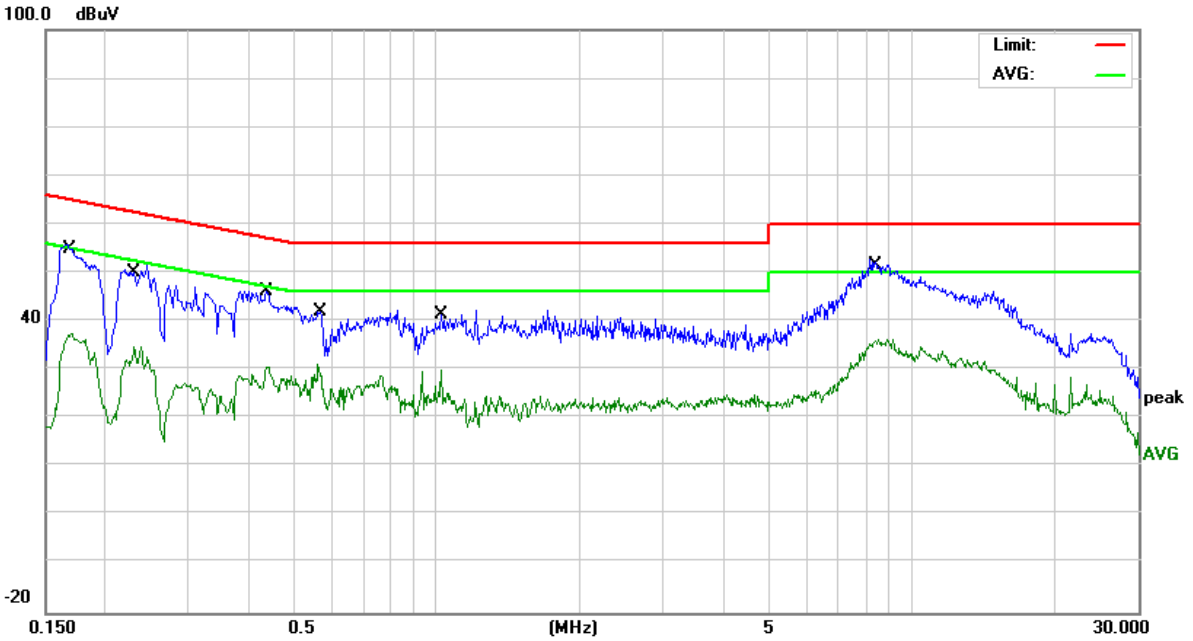

EUT：	PINEBOOK Pro	Model Name. ：	14″ PINEBOOK Pro LINUX LAPTOP
Temperature：	26 ℃	Relative Humidity：	56%
Pressure：	1010hPa	Phase：	N
Test Voltage ：	DC 5V from Adapter AC 120V/60Hz	Test Mode：	Mode 1

Frequency (MHz)	Reading Level (dBμV)	Correct Factor (dB)	Measure-ment (dBμV)	Limits (dBμV)	Margin (dB)	Remark
0.174	45.87	9.73	55.60	64.78	-9.18	QP
0.174	29.30	9.73	39.03	54.78	-15.75	AVG
0.250	38.32	9.74	48.06	61.75	-13.69	QP
0.250	22.64	9.74	32.38	51.75	-19.37	AVG
0.566	33.05	9.75	42.80	56.00	-13.20	QP
0.566	21.51	9.75	31.26	46.00	-14.74	AVG
0.930	31.91	9.75	41.66	56.00	-14.34	QP
0.930	20.50	9.75	30.25	46.00	-15.75	AVG
2.426	31.33	9.82	41.15	56.00	-14.85	QP
2.426	16.77	9.82	26.59	46.00	-19.41	AVG
8.514	41.71	10.01	51.72	60.00	-8.28	QP
8.514	26.69	10.01	36.70	50.00	-13.30	AVG

Remark:

1. All readings are Quasi-Peak and Average values.
2. Factor = Insertion Loss + Cable Loss.

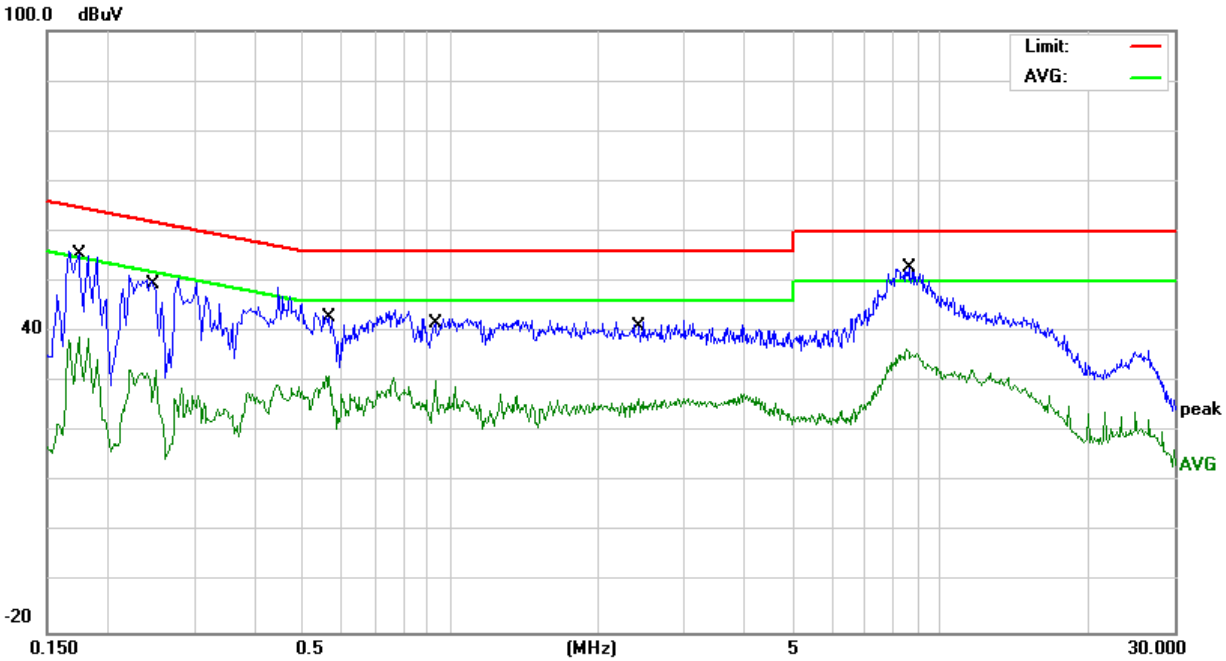

2.2 RADIATED EMISSION MEASUREMENT

2.2.1 APPLICABLE STANDARD

According to FCC Part 15.407(d) and 15.209

2.2.2 CONFORMANCE LIMIT

According to FCC Part 15.407(b)(7): radiated emissions which fall in the restricted bands, as defined in §15.205(a), must also comply with the radiated emission limits specified in §15.209(a) (see §15.205(c)).
According to FCC Part15.205, Restricted bands

MHz	MHz	MHz	GHz
0.090-0.110	16.42-16.423	399.9-410	4.5-5.15
0.495-0.505	16.69475-16.69525	608-614	5.35-5.46
2.1735-2.1905	16.80425-16.80475	960-1240	7.25-7.75
4.125-4.128	25.5-25.67	1300-1427	8.025-8.5
4.17725-4.17775	37.5-38.25	1435-1626.5	9.0-9.2
4.20725-4.20775	73-74.6	1645.5-1646.5	9.3-9.5
6.215-6.218	74.8-75.2	1660-1710	10.6-12.7
6.26775-6.26825	123-138	2200-2300	14.47-14.5
8.291-8.294	149.9-150.05	2310-2390	15.35-16.2
8.362-8.366	156.52475-156.52525	2483.5-2500	17.7-21.4
8.37625-8.38675	156.7-156.9	2690-2900	22.01-23.12
8.41425-8.41475	162.0125-167.17	3260-3267	23.6-24.0
12.29-12.293	167.72-173.2	3332-3339	31.2-31.8
12.51975-12.52025	240-285	3345.8-3358	36.43-36.5
12.57675-12.57725	322-335.4	3600-4400	(2)
13.36-13.41			

20dBc in any 100 kHz bandwidth outside the operating frequency band. In case the emission fall within the restricted band specified on 15.205(a), then the 15.209(a) limit in the table below has to be followed.

Restricted Frequency(MHz)	Field Strength (μV/m)	Field Strength (dBμV/m)	Measurement Distance
0.009~0.490	2400/F(KHz)	20 log (uV/m)	300
0.490~1.705	24000/F(KHz)	20 log (uV/m)	30
1.705~30.0	30	29.5	30
30-88	100	40	3
88-216	150	43.5	3
216-960	200	46	3
Above 960	500	54	3

Limits of Radiated Emission Measurement(Above 1000MHz)

Frequency(MHz)	Class B (dBuV/m) (at 3M)	
	PEAK	AVERAGE
Above 1000	74	54

Remark :1. Emission level in dBuV/m=20 log (uV/m)
2. Measurement was performed at an antenna to the closed point of EUT distance of meters.
3. For Frequency 9kHz~30MHz:
Distance extrapolation factor =40log(Specific distance/ test distance)(dB);
Limit line=Specific limits(dBuV) + distance extrapolation factor.
For Frequency above 30MHz:
Distance extrapolation factor =20log(Specific distance/ test distance)(dB);
Limit line=Specific limits(dBuV) + distance extrapolation factor.

2.2.3 MEASURING INSTRUMENTS

The Measuring equipment is listed in the section 6.3 of this test report.

2.2.4 TEST CONFIGURATION

(a) For radiated emissions below 30MHz

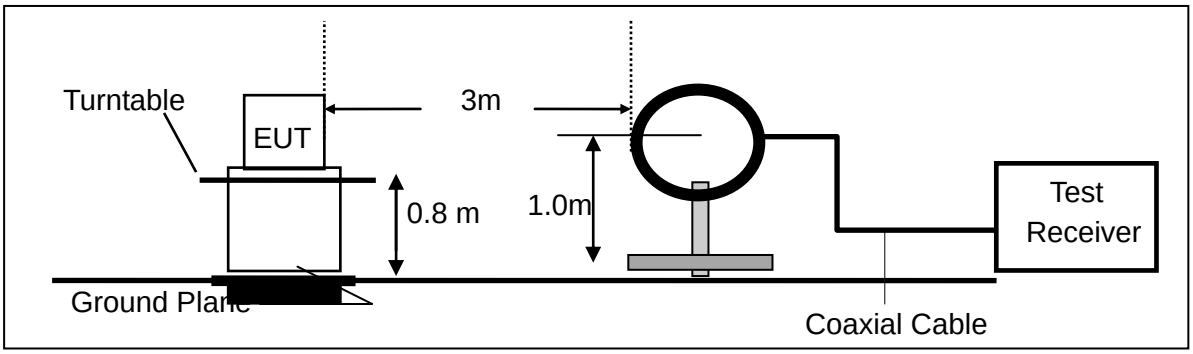

(b) For radiated emissions from 30MHz to 1000MHz

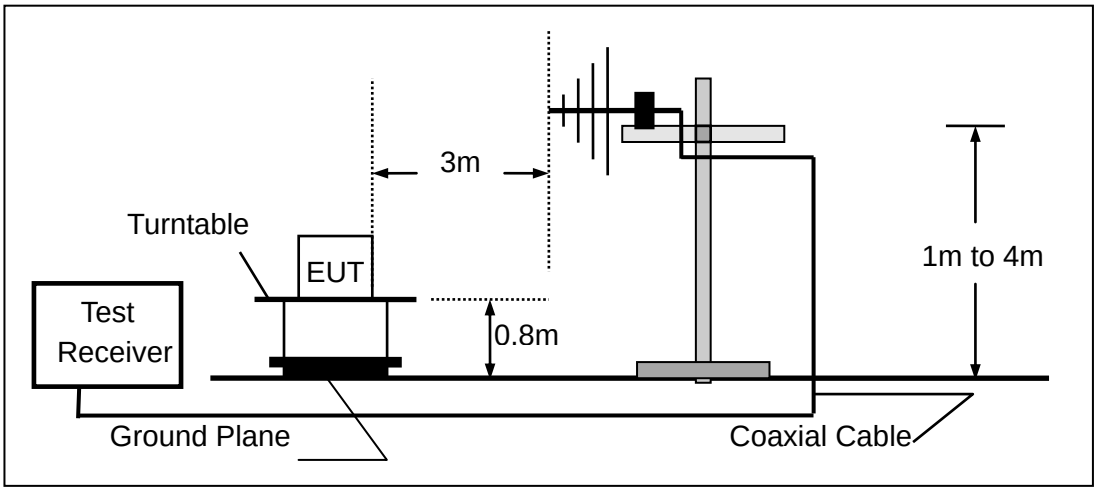

(c) For radiated emissions above 1000MHz

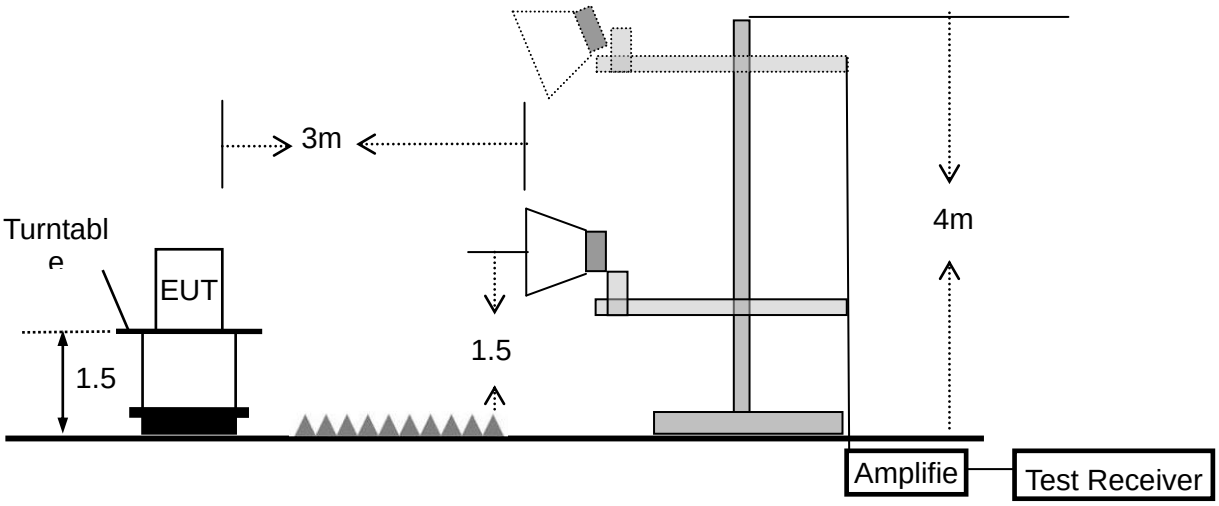

2.2.5 TEST PROCEDURE

The test site semi-anechoic chamber has met the requirement of NSA tolerance 4 dB according to the standards: ANSI C63.10-2013. The test distance is 3m.The setup is according to the requirements in Section 13.1.4.1 of ANSI C63.10-2013 and CAN/CSA-CEI/IEC CISPR 22.
This test is required for any spurious emission that falls in a Restricted Band, as defined in Section 15.205.
It must be performed with the highest gain of each type of antenna proposed for use with the EUT.
Use the following spectrum analyzer settings:

Spectrum Parameter	Setting
Attenuation	Auto
Start Frequency	1000 MHz
Stop Frequency	10th carrier harmonic
RB / VB (emission in restricted band)	1 MHz / 1 MHz for Peak, 1 MHz / 10Hz for Average

Receiver Parameter	Setting
Attenuation	Auto
Start ~ Stop Frequency	9kHz~150kHz / RB 200Hz for QP
Start ~ Stop Frequency	150kHz~30MHz / RB 9kHz for QP
Start ~ Stop Frequency	30MHz~1000MHz / RB 120kHz for QP

a. The measuring distance of at 3 m shall be used for measurements at frequency up to 1GHz. For frequencies above 1GHz, any suitable measuring distance may be used.
b. The EUT was placed on the top of a rotating table 0.8 m for below 1GHz and 1.5m for above 1GHz the ground at a 3 meter. The table was rotated 360 degrees to determine the position of the highest radiation.
c. The height of the equipment or of the substitution antenna shall be 0.8 m for below 1GHz and 1.5m for above 1GHz; the height of the test antenna shall vary between 1 m to 4 m. Both horizontal and vertical polarizations of the antenna are set to make the measurement.
d. The initial step in collecting conducted emission data is a spectrum analyzer peak detector mode pre-scanning the measurement frequency range. Significant peaks are then marked and then Quasi Peak detector mode re-measured.
e. If the Peak Mode measured value compliance with and lower than Quasi Peak Mode Limit, the EUT shall be deemed to meet QP Limits and then no additional QP Mode measurement performed.
f. For the actual test configuration, please refer to the related Item –EUT Test Photos.

Note:

Both horizontal and vertical antenna polarities were tested
and performed pretest to three orthogonal axis. The worst case emissions were reported

During the radiated emission test, the Spectrum Analyzer was set with the following configurations:

Frequency Band (MHz)	Function	Resolution bandwidth	Video Bandwidth
30 to 1000	QP	120 kHz	300 kHz
Above 1000	Peak	1 MHz	1 MHz
	Average	1 MHz	10 Hz

Note: for the frequency ranges below 30 MHz, a narrower RBW is used for these ranges but the measured value should add a RBW correction factor (RBWCF) where RBWCF [dB] =10*lg(100 [kHz]/narrower RBW [kHz]). , the narrower RBW is 1 kHz and RBWCF is 20 dB for the frequency 9 kHz to 150 kHz, and the narrower RBW is 10 kHz and RBWCF is 10 dB for the frequency 150 kHz to 30 MHz.

2.2.6 TEST RESULTS (9KHZ – 30 MHZ)

EUT：	PINEBOOK Pro	Model Name. ：	14″ PINEBOOK Pro LINUX LAPTOP
Temperature：	20 ℃	Relative Humidtity：	48%
Pressure：	1010 hPa	Test Voltage ：	DC 3.8V
Test Mode ：	TX	Polarization :	--

Freq.	Reading	Limit	Margin	State
(MHz)	(dBuV/m)	(dBuV/m)	(dB)	P/F
--	--	--	--	N/A
--	--	--	--	N/A

NOTE:

The amplitude of spurious emissions which are attenuated by more than 20dB below the permissible value has no need to be reported.

2.2.7 TEST RESULTS (30MHZ – 1GHZ)

EUT：	PINEBOOK Pro	Model Name. ：	14″ PINEBOOK Pro LINUX LAPTOP
Temperature：	20 ℃	Relative Humidity：	48%
Pressure：	1010 hPa	Test Voltage ：	DC 3.8V
Test Mode ：	TX(5.2G)- 802.11a (High CH)		

Polar (H/V)	Frequency (MHz)	Meter Reading (dBuV)	Factor (dB)	Emission Level (dBuV/m)	Limits (dBuV/m)	Margin (dB)	Remark
V	30.0000	15.69	18.59	34.28	40.00	-5.72	QP
V	84.7018	20.73	8.91	29.64	40.00	-10.36	QP
V	118.1860	19.78	12.35	32.13	43.50	-11.37	QP
V	225.3077	17.28	10.72	28.00	46.00	-18.00	QP
V	315.4806	15.43	14.91	30.34	46.00	-15.66	QP
V	550.9479	11.50	22.50	34.00	46.00	-12.00	QP

Remark:
Absolute Level= ReadingLevel+ Factor, Margin= Absolute Level - Limit

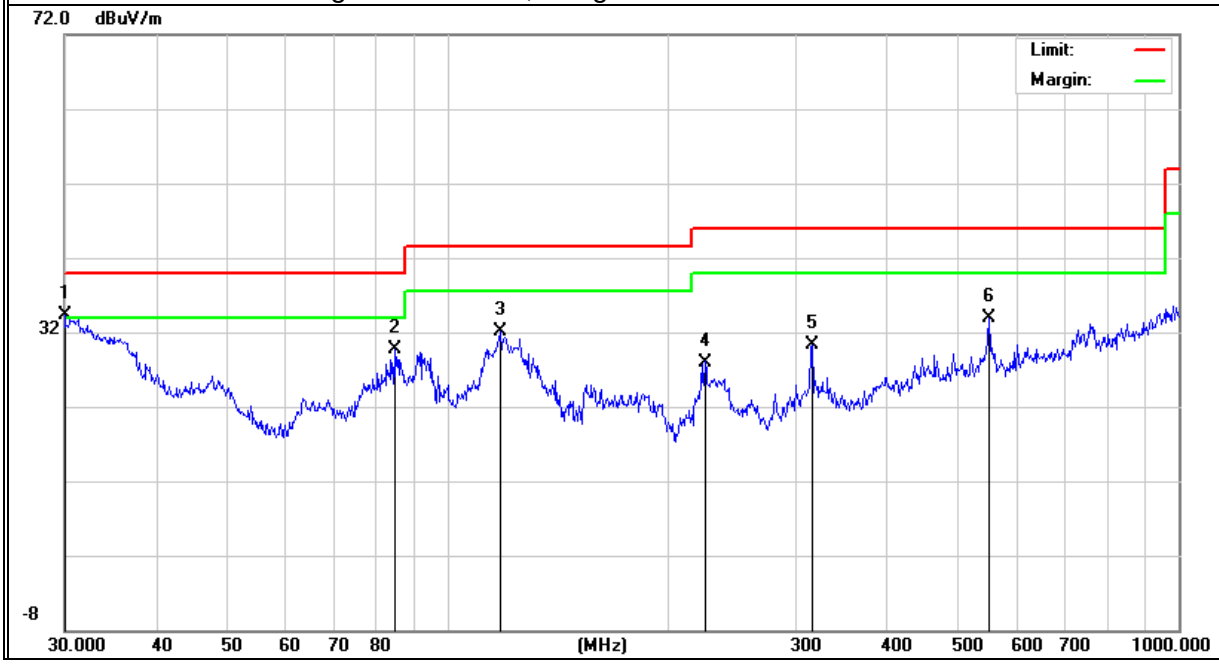

Polar (H/V)	Frequency (MHz)	Meter Reading (dBuV)	Factor (dB)	Emission Level (dBuV/m)	Limits (dBuV/m)	Margin (dB)	Remark
H	85.8983	19.97	9.32	29.29	40.00	-10.71	QP
H	130.8369	18.61	12.55	31.16	43.50	-12.34	QP
H	148.4410	19.83	11.90	31.73	43.50	-11.77	QP
H	222.9499	21.80	10.74	32.54	46.00	-13.46	QP
H	463.9696	12.35	18.88	31.23	46.00	-14.77	QP
H	595.1326	11.24	21.48	32.72	46.00	-13.28	QP

Remark:
Absolute Level= ReadingLevel+ Factor, Margin= Absolute Level - Limit

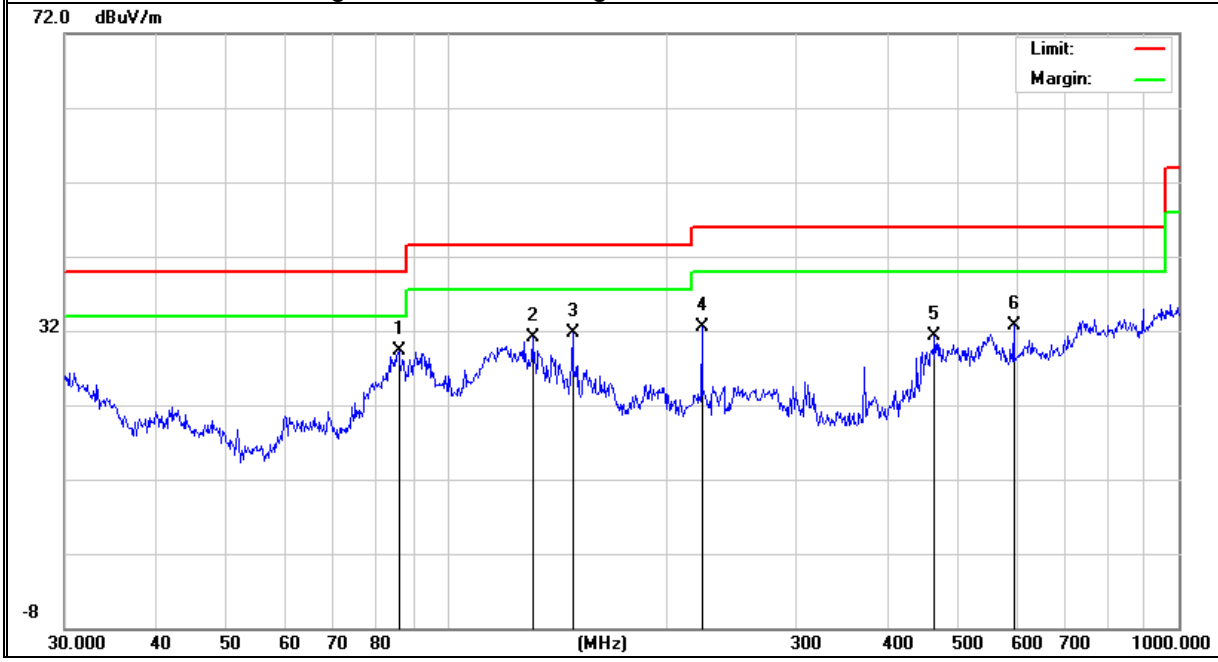

EUT：	PINEBOOK Pro	Model Name. ：	14″ PINEBOOK Pro LINUX LAPTOP
Temperature：	20 ℃	Relative Humidity：	48%
Pressure：	1010 hPa	Test Voltage ：	DC 3.8V
Test Mode ：	TX(5.3G)- 802.11a (High CH)		

Polar (H/V)	Frequency (MHz)	Meter Reading (dBuV)	Factor (dB)	Emission Level (dBuV/m)	Limits (dBuV/m)	Margin (dB)	Remark
V	32.2924	15.17	17.68	32.85	40.00	-7.15	QP
V	110.9569	18.15	11.67	29.82	43.50	-13.68	QP
V	158.6673	15.49	10.96	26.45	43.50	-17.05	QP
V	197.1999	18.14	8.58	26.72	43.50	-16.78	QP
V	319.9370	13.13	14.97	28.10	46.00	-17.90	QP
V	487.3149	13.54	19.60	33.14	46.00	-12.86	QP

Remark:
Absolute Level= ReadingLevel+ Factor, Margin= Absolute Level - Limit

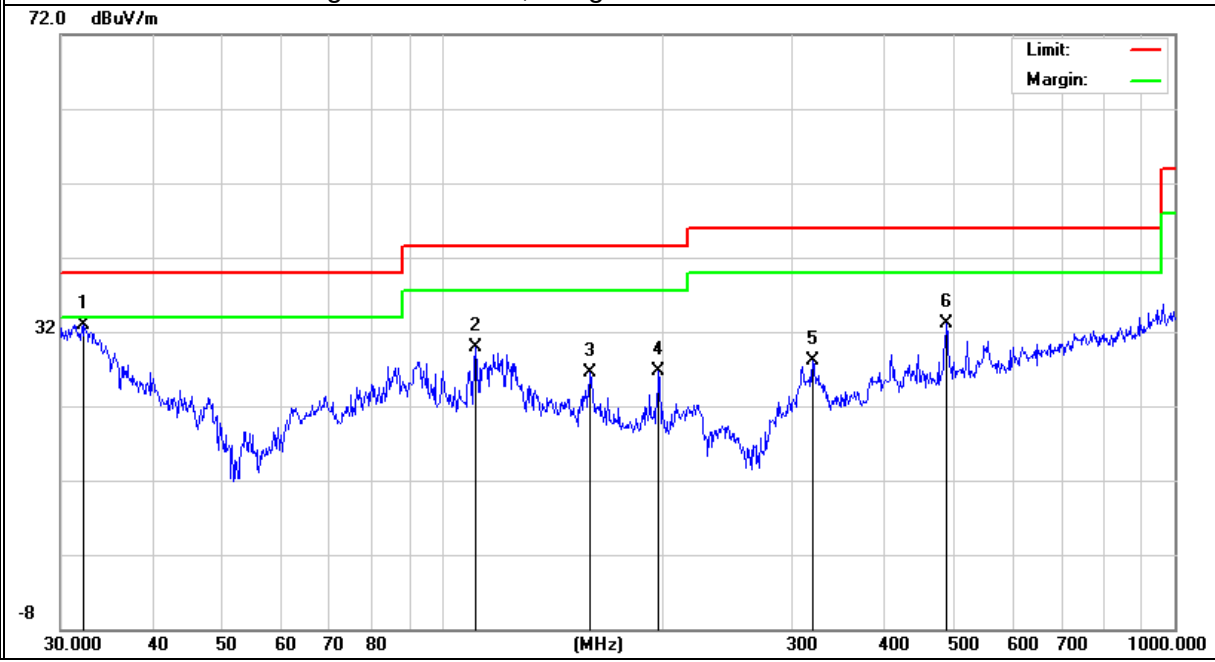

Polar (H/V)	Frequency	Meter Reading	Factor	Emission Level	Limits	Margin	Remark
	(MHz)	(dBuV)	(dB)	(dBuV/m)	(dBuV/m)	(dB)	
H	91.8161	19.29	10.05	29.34	43.50	-14.16	QP
H	142.3240	19.14	12.27	31.41	43.50	-12.09	QP
H	222.9499	18.60	10.74	29.34	46.00	-16.66	QP
H	297.2241	18.64	14.32	32.96	46.00	-13.04	QP
H	382.5878	13.92	17.02	30.94	46.00	-15.06	QP
H	614.2142	10.75	22.38	33.13	46.00	-12.87	QP

Remark:

Absolute Level= ReadingLevel+ Factor, Margin= Absolute Level - Limit

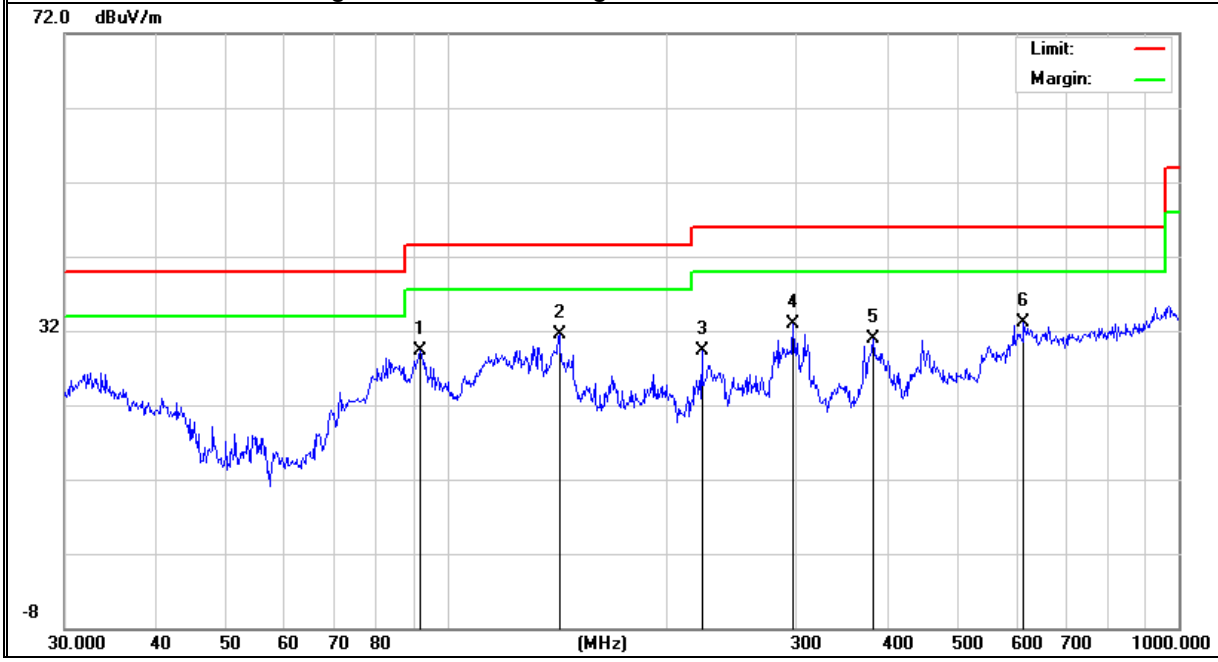

EUT：	PINEBOOK Pro	Model Name. ：	14″ PINEBOOK Pro LINUX LAPTOP
Temperature：	20 ℃	Relative Humidity：	48%
Pressure：	1010 hPa	Test Voltage ：	DC 3.8V
Test Mode ：	TX(5.6G)- 802.11a (High CH)		

Polar (H/V)	Frequency (MHz)	Meter Reading (dBuV)	Factor (dB)	Emission Level (dBuV/m)	Limits (dBuV/m)	Margin (dB)	Remark
V	32.2924	16.17	17.68	33.85	40.00	-6.15	QP
V	47.6584	15.12	10.88	26.00	40.00	-14.00	QP
V	92.7870	18.27	10.22	28.49	43.50	-15.01	QP
V	119.0180	16.72	12.33	29.05	43.50	-14.45	QP
V	197.1999	18.14	8.58	26.72	43.50	-16.78	QP
V	410.3824	12.21	18.22	30.43	46.00	-15.57	QP

Remark:
Absolute Level= ReadingLevel+ Factor, Margin= Absolute Level - Limit

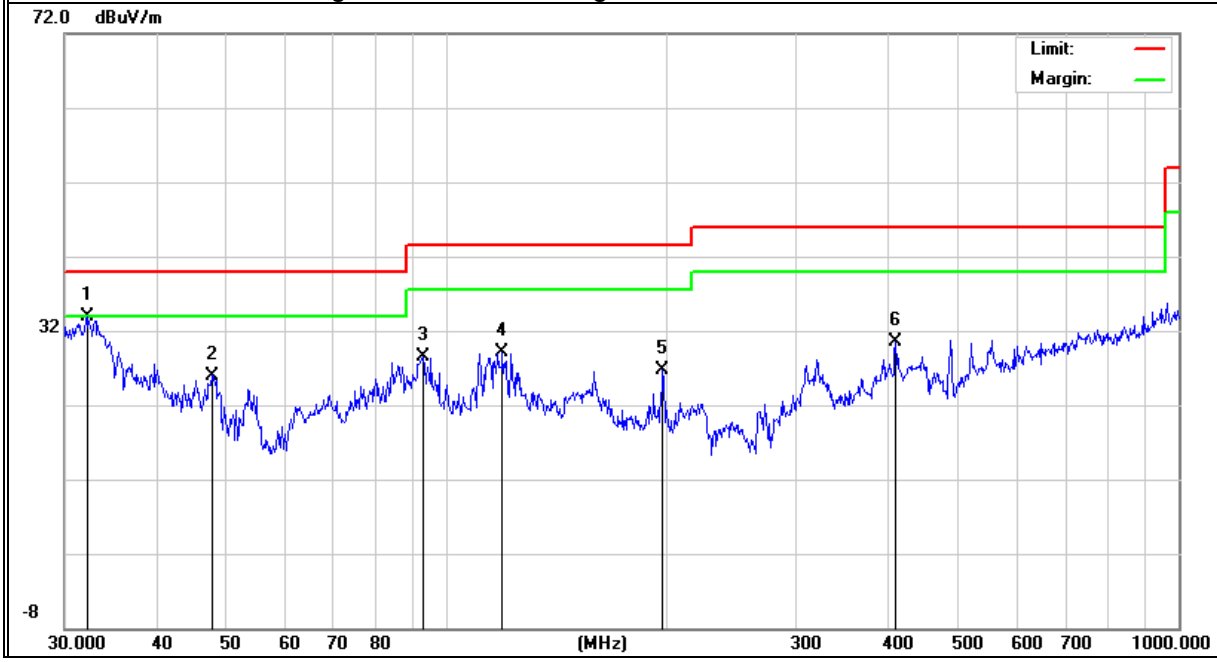

Polar (H/V)	Frequency	Meter Reading	Factor	Emission Level	Limits	Margin	Remark
	(MHz)	(dBuV)	(dB)	(dBuV/m)	(dBuV/m)	(dB)	
H	33.6802	12.34	16.90	29.24	40.00	-10.76	QP
H	91.8161	19.29	10.05	29.34	43.50	-14.16	QP
H	142.3240	18.14	12.27	30.41	43.50	-13.09	QP
H	297.2241	18.14	14.32	32.46	46.00	-13.54	QP
H	382.5878	13.92	17.02	30.94	46.00	-15.06	QP
H	614.2142	10.25	22.38	32.63	46.00	-13.37	QP

Remark:

Absolute Level= ReadingLevel+ Factor, Margin= Absolute Level - Limit

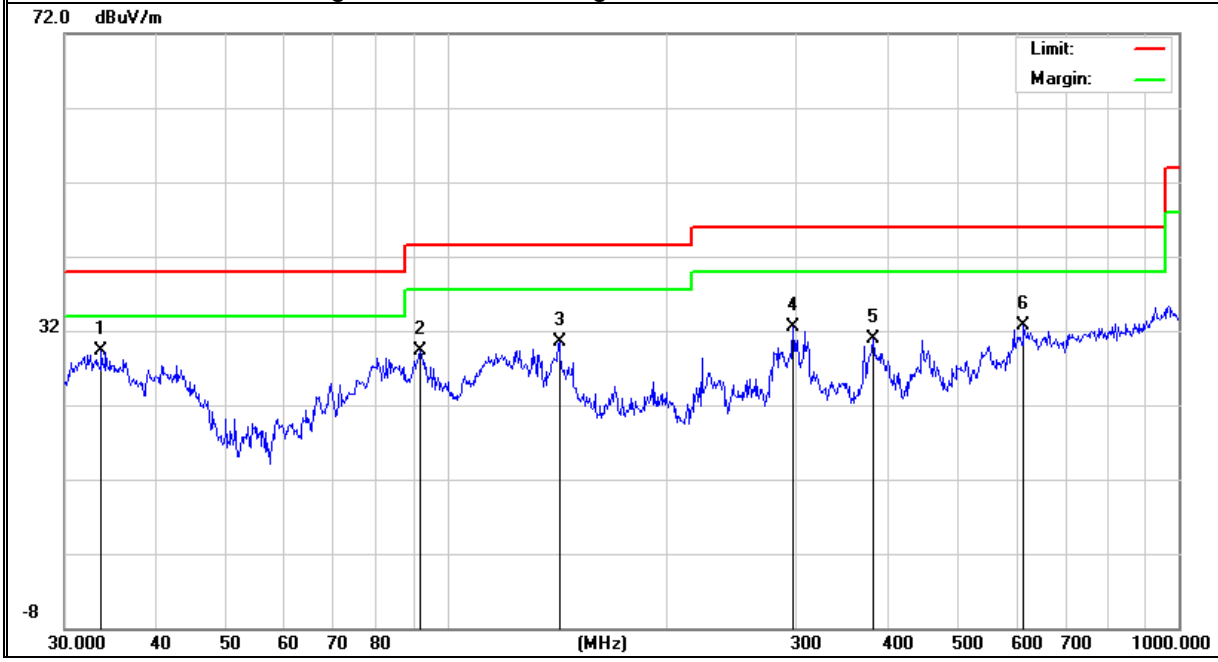

EUT：	PINEBOOK Pro	Model Name. ：	14″ PINEBOOK Pro LINUX LAPTOP
Temperature：	20 ℃	Relative Humidity：	48%
Pressure：	1010 hPa	Test Voltage ：	DC 3.8V
Test Mode ：	TX(5.8G) - 802.11a (High CH)		

Polar (H/V)	Frequency (MHz)	Meter Reading (dBuV)	Factor (dB)	Emission Level (dBuV/m)	Limits (dBuV/m)	Margin (dB)	Remark
V	31.2893	14.82	18.11	32.93	40.00	-7.07	QP
V	84.1098	20.59	8.71	29.30	40.00	-10.70	QP
V	119.0180	17.72	12.33	30.05	43.50	-13.45	QP
V	212.2692	20.45	9.69	30.14	43.50	-13.36	QP
V	564.6389	12.20	21.89	34.09	46.00	-11.91	QP
V	737.0714	9.50	25.02	34.52	46.00	-11.48	QP

Remark:

Absolute Level= ReadingLevel+ Factor, Margin= Absolute Level - Limit

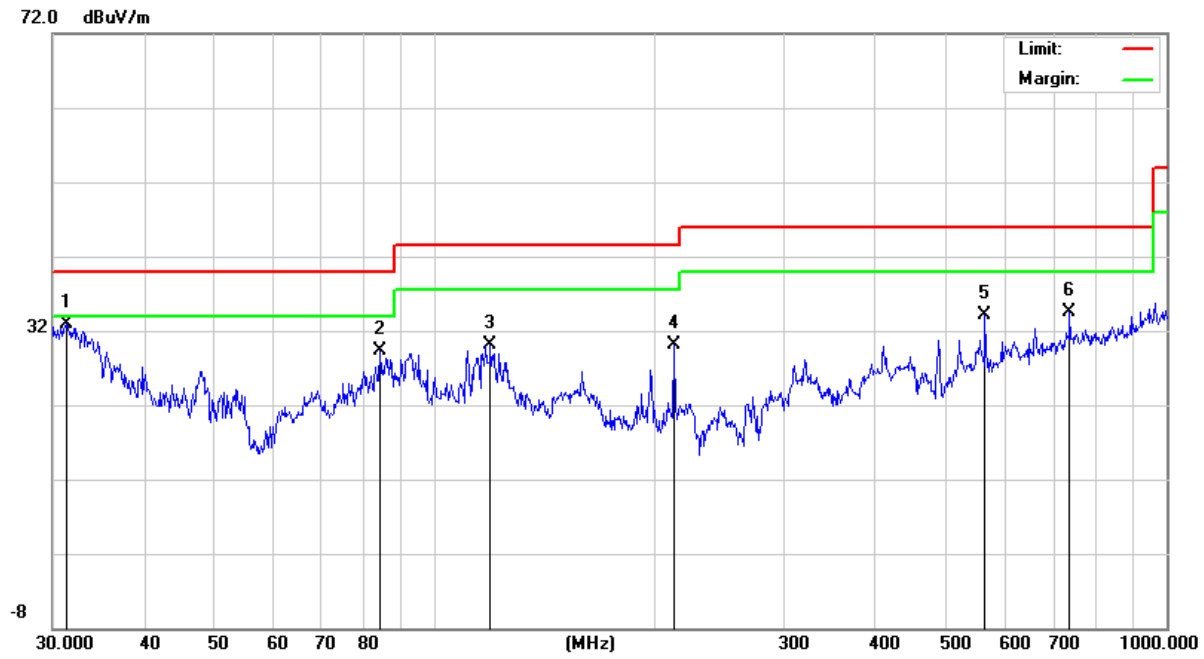

Polar (H/V)	Frequency (MHz)	Meter Reading (dBuV)	Factor (dB)	Emission Level (dBuV/m)	Limits (dBuV/m)	Margin (dB)	Remark
H	33.6802	15.34	16.90	32.24	40.00	-7.76	QP
H	91.8161	20.79	10.05	30.84	43.50	-12.66	QP
H	116.5400	16.51	12.38	28.89	43.50	-14.61	QP
H	222.9499	17.60	10.74	28.34	46.00	-17.66	QP
H	307.8312	17.19	14.79	31.98	46.00	-14.02	QP
H	446.4141	12.37	18.42	30.79	46.00	-15.21	QP

Remark:

Absolute Level= ReadingLevel+ Factor, Margin= Absolute Level - Limit

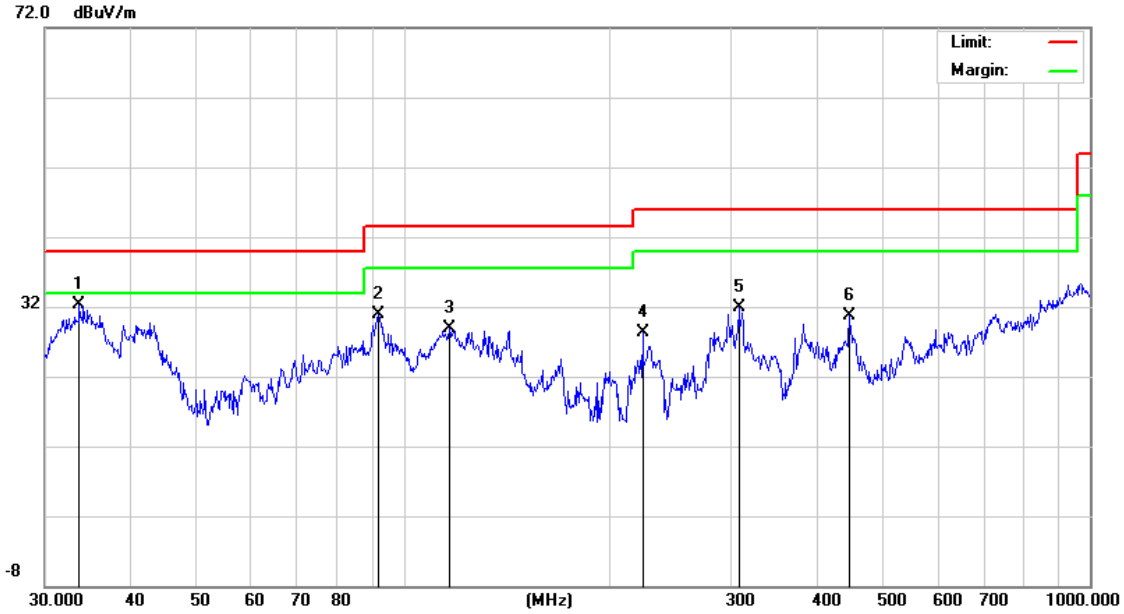

2.2.8 TEST RESULTS (1GHz-18GHz)

EUT：	PINEBOOK Pro	Model Name. ：	14″ PINEBOOK Pro LINUX LAPTOP
Temperature：	20 ℃	Relative Humidity：	48%
Pressure：	1010 hPa	Test Voltage ：	DC 3.8V
Test Mode ：	TX(5.2G) - 802.11a _5180~5240MHz		

Polar	Frequency	Meter Reading	Cable loss	Antenna Factor	Preamp Factor	Emission Level	Limits	Margin	Detector Type
(H/V)	(MHz)	(dBuV)	(dB)	dB/m	(dB)	(dBuV/m	(dBuV/m	(dB)	
Low Channel (5180 MHz)-Above 1G									
Vertical	5150.00	69.04	5.94	35.40	44.00	66.38	74.00	-7.62	Pk
Vertical	5150.00	44.22	5.94	35.40	44.00	41.56	54.00	-12.44	AV
Horizontal	5150.00	67.73	5.94	35.18	44.00	64.85	74.00	-9.15	Pk
Horizontal	5150.00	43.83	5.94	35.18	44.00	40.95	54.00	-13.05	AV

EUT：	PINEBOOK Pro	Model Name. ：	14″ PINEBOOK Pro LINUX LAPTOP
Temperature：	20 ℃	Relative Humidity：	48%
Pressure：	1010 hPa	Test Voltage ：	DC 3.8V
Test Mode ：	TX(5.3G) - 802.11a _5260~5320MHz		

Polar	Frequency	Meter Reading	Cable loss	Antenna Factor	Preamp Factor	Emission Level	Limits	Margin	Detector Type
(H/V)	(MHz)	(dBuV)	(dB)	dB/m	(dB)	(dBuV/m	(dBuV/m	(dB)	
High Channel (5320 MHz)-Above 1G									
Vertical	5350.00	57.84	6.48	35.40	43.50	56.22	74.00	-17.78	Pk
Vertical	5350.00	42.58	6.48	35.40	43.50	40.96	54.00	-13.04	AV
Horizontal	5350.00	56.76	6.48	35.18	43.50	54.92	74.00	-19.08	Pk
Horizontal	5350.00	41.76	6.48	35.18	43.50	39.92	54.00	-14.08	AV

EUT：	PINEBOOK Pro	Model Name. ：	14″ PINEBOOK Pro LINUX LAPTOP
Temperature：	20 ℃	Relative Humidity：	48%
Pressure：	1010 hPa	Test Voltage ：	DC 3.8V
Test Mode ：	TX (5.6G) -- 802.11a _5500~5700MHz		

Polar	Frequency	Meter Reading	Cable loss	Antenna Factor	Preamp Factor	Emission Level	Limits	Margin	Detector Type
(H/V)	(MHz)	(dBuV)	(dB)	dB/m	(dB)	(dBuV/m	(dBuV/m	(dB)	
Low Channel (5500 MHz)-Above 1G									
Vertical	5460.00	63.26	6.88	36.25	44.00	62.39	74.00	-11.61	Pk
Vertical	5460.00	36.89	6.88	36.25	44.00	36.02	54.00	-17.98	AV
Horizontal	5460.00	61.77	6.88	36.25	44.00	60.90	74.00	-13.10	Pk
Horizontal	5460.00	35.95	6.88	36.25	44.00	35.08	54.00	-18.92	AV

Note:"802.11a(5G)" mode is the worst mode. PK value is lower than the Average value limit, So average didn't record.

The amplitude of spurious emissions that are attenuated by more than 20dB below the permissible value

has no need to be reported.

Emission level (dBuV/m) = 20 log Emission level (uV/m).

Corrected Reading: Antenna Factor + Cable Loss + Read Level - Preamp Factor = Level.

EUT：	PINEBOOK Pro	Model Name. ：	14″ PINEBOOK Pro LINUX LAPTOP
Temperature：	20 ℃	Relative Humidity：	48%
Pressure：	1010 hPa	Test Voltage ：	DC 3.8V
Test Mode ：	TX(5.2G) - 802.11a _5180~5240MHz		

Polar	Frequency	Meter Reading	Cable loss	Antenna Factor	Preamp Factor	Emission Level	Limits	Margin	Detector Type
(H/V)	(MHz)	(dBuV)	(dB)	dB/m	(dB)	(dBuV/m	(dBuV/m	(dB)	
Low Channel (5180 MHz)-Above 1G									
Vertical	10360.15	59.68	8.46	39.75	44.50	63.39	74.00	-10.61	Pk
Vertical	10360.15	35.55	8.46	39.75	44.50	39.26	54.00	-14.74	AV
Vertical	15540.22	60.57	10.12	38.80	44.10	65.39	74.00	-8.61	Pk
Vertical	15540.22	40.01	10.12	38.80	42.70	46.23	54.00	-7.77	AV
Horizontal	10360.47	56.24	8.46	38.71	44.50	58.91	74.00	-15.09	Pk
Horizontal	10360.47	44.04	8.46	38.71	44.50	46.71	54.00	-7.29	AV
Horizontal	15540.38	55.45	10.12	38.38	44.10	59.85	74.00	-14.15	Pk
Horizontal	15540.38	43.72	10.12	38.38	44.10	48.12	54.00	-5.88	AV
middle Channel (5200 MHz)-Above 1G									
Vertical	10400.09	55.31	8.47	37.88	44.51	57.15	74.00	-16.85	Pk
Vertical	10400.09	37.71	8.47	37.88	44.51	39.55	54.00	-14.45	AV
Vertical	15600.15	55.24	10.12	38.80	44.10	60.06	74.00	-13.94	Pk
Vertical	15600.15	36.75	10.12	38.80	42.70	42.97	54.00	-11.03	AV
Horizontal	10400.14	56.76	8.47	38.64	44.50	59.37	74.00	-14.63	Pk
Horizontal	10400.14	41.10	8.47	38.64	44.50	43.71	54.00	-10.29	AV
Horizontal	15600.51	60.83	10.12	38.38	44.10	65.23	74.00	-8.77	Pk
Horizontal	15600.51	40.14	10.12	38.38	44.10	44.54	54.00	-9.46	AV
High Channel (5240 MHz)-Above 1G									
Vertical	10480.23	59.13	8.46	37.68	44.50	60.77	74.00	-13.23	Pk
Vertical	10480.23	44.60	8.46	37.68	44.50	46.24	54.00	-7.76	AV
Vertical	15720.15	59.99	10.12	38.80	44.10	64.81	74.00	-9.19	Pk
Vertical	15720.15	40.29	10.12	38.80	42.70	46.51	54.00	-7.49	AV
Horizontal	10480.59	58.02	8.46	38.57	44.50	60.55	74.00	-13.45	Pk
Horizontal	10480.59	37.87	8.46	38.57	44.50	40.40	54.00	-13.60	AV
Horizontal	15720.18	58.97	10.12	38.38	44.10	63.37	74.00	-10.63	Pk
Horizontal	15720.18	40.38	10.12	38.38	44.10	44.78	54.00	-9.22	AV

Note:"802.11a(5G)" mode is the worst mode. PK value is lower than the Average value limit, So average didn't record.

The amplitude of spurious emissions that are attenuated by more than 20dB below the permissible value

has no need to be reported.

Emission level (dBuV/m) = 20 log Emission level (uV/m).

Corrected Reading: Antenna Factor + Cable Loss + Read Level - Preamp Factor = Level

EUT：	PINEBOOK Pro	Model Name. ：	14″ PINEBOOK Pro LINUX LAPTOP
Temperature：	20 ℃	Relative Humidity：	48%
Pressure：	1010 hPa	Test Voltage ：	DC 3.8V
Test Mode ：	TX(5.3G) - 802.11a _5260~5320MHz		

Polar	Frequency	Meter Reading	Cable loss	Antenna Factor	Preamp Factor	Emission Level	Limits	Margin	Detector Type
(H/V)	(MHz)	(dBuV)	(dB)	dB/m	(dB)	(dBuV/m)	(dBuV/m)	(dB)	
Low Channel (5260 MHz)-Above 1G									
Vertical	10520.12	64.11	8.26	39.75	44.50	67.63	74.00	-6.37	Pk
Vertical	10520.12	41.93	8.01	39.75	44.50	45.19	54.00	-8.81	AV
Vertical	15780.34	60.75	10.12	38.80	44.10	65.57	74.00	-8.43	Pk
Vertical	15780.34	40.61	9.62	38.80	42.70	46.33	54.00	-7.67	AV
Horizontal	10520.26	56.37	8.38	38.71	44.50	58.97	74.00	-15.03	Pk
Horizontal	10520.26	41.14	8.45	38.71	44.50	43.81	54.00	-10.19	AV
Horizontal	15780.34	55.32	9.88	38.38	44.10	59.48	74.00	-14.52	Pk
Horizontal	15780.34	42.20	9.94	38.38	44.10	46.42	54.00	-7.58	AV
middle Channel (5280 MHz)-Above 1G									
Vertical	10560.19	59.30	8.28	37.88	44.51	60.95	74.00	-13.05	Pk
Vertical	10560.19	41.08	7.99	37.88	44.51	42.44	54.00	-11.56	AV
Vertical	15840.36	64.00	9.79	38.8	44.10	68.49	74.00	-5.51	Pk
Vertical	15840.36	37.39	9.70	38.8	42.70	43.19	54.00	-10.81	AV
Horizontal	10560.74	59.85	8.33	38.64	44.50	62.31	74.00	-11.69	Pk
Horizontal	10560.74	41.86	8.07	38.64	44.50	44.07	54.00	-9.93	AV
Horizontal	15840.37	61.55	9.99	38.38	44.10	65.82	74.00	-8.18	Pk
Horizontal	15840.37	41.83	9.81	38.38	44.10	45.92	54.00	-8.08	AV
High Channel (5320 MHz)-Above 1G									
Vertical	10640.58	63.37	8.14	37.68	44.50	64.69	74.00	-9.31	Pk
Vertical	10640.58	39.12	8.35	37.68	44.50	40.65	54.00	-13.35	AV
Vertical	15960.41	58.97	10.11	38.8	44.10	63.77	74.00	-10.23	Pk
Vertical	15960.41	38.30	9.64	38.8	42.70	44.05	54.00	-9.95	AV
Horizontal	10640.24	62.24	8.20	38.57	44.50	64.51	74.00	-9.49	Pk
Horizontal	10640.24	38.80	8.03	38.57	44.50	40.91	54.00	-13.09	AV
Horizontal	15960.88	56.56	9.81	38.38	44.10	60.65	74.00	-13.35	Pk
Horizontal	15960.88	41.46	9.96	38.38	44.10	45.70	54.00	-8.30	AV

Note:"802.11a(5G)" mode is the worst mode. PK value is lower than the Average value limit, So average didn't record.

The amplitude of spurious emissions that are attenuated by more than 20dB below the permissible value

has no need to be reported.

Emission level (dBuV/m) = 20 log Emission level (uV/m).

Corrected Reading: Antenna Factor + Cable Loss + Read Level - Preamp Factor = Level

EUT：	PINEBOOK Pro	Model Name. ：	14″ PINEBOOK Pro LINUX LAPTOP
Temperature：	20 ℃	Relative Humidity：	48%
Pressure：	1010 hPa	Test Voltage ：	DC 3.8V
Test Mode ：	TX (5.6G) -- 802.11a _5500~5700MHz		

Polar	Frequency	Meter Reading	Cable loss	Antenna Factor	Preamp Factor	Emission Level	Limits	Margin	Detector Type
(H/V)	(MHz)	(dBuV)	(dB)	dB/m	(dB)	(dBuV/m)	(dBuV/m)	(dB)	
Low Channel (5500 MHz)-Above 1G									
Vertical	11000.25	57.20	8.24	39.75	44.50	60.70	74.00	-13.3	Pk
Vertical	11000.25	40.82	8.35	39.75	44.50	44.42	54.00	-9.6	AV
Vertical	16500.41	50.00	10.05	38.80	44.10	54.75	74.00	-19.2	Pk
Vertical	16500.41	43.71	9.65	38.80	42.70	49.46	54.00	-4.5	AV
Horizontal	11000.32	60.99	8.22	38.71	44.50	63.43	74.00	-10.6	Pk
Horizontal	11000.32	42.68	8.14	38.71	44.50	45.04	54.00	-9.0	AV
Horizontal	16500.47	59.50	10.04	38.38	44.10	63.82	74.00	-10.2	Pk
Horizontal	16500.47	39.86	9.73	38.38	44.10	43.87	54.00	-10.1	AV
Middle Channel (5600 MHz)-Above 1G									
Vertical	11200.58	61.57	8.24	37.88	44.51	63.19	74.00	-10.81	Pk
Vertical	11200.58	42.58	8.13	37.88	44.51	44.07	54.00	-9.93	AV
Vertical	16800.45	55.82	9.71	38.8	44.10	60.22	74.00	-13.78	Pk
Vertical	16800.45	36.18	10.12	38.8	42.70	42.39	54.00	-11.61	AV
Horizontal	11200.45	57.01	8.31	38.64	44.50	59.45	74.00	-14.55	Pk
Horizontal	11200.45	41.81	8.04	38.64	44.50	44.00	54.00	-10.00	AV
Horizontal	16800.33	57.51	10.09	38.38	44.10	61.88	74.00	-12.12	Pk
Horizontal	16800.33	40.08	9.63	38.38	44.10	43.99	54.00	-10.01	AV
High Channel (5700 MHz)-Above 1G									
Vertical	11400.29	57.92	8.10	37.68	44.50	59.20	74.00	-14.80	Pk
Vertical	11400.29	41.07	8.23	37.68	44.50	42.48	54.00	-11.52	AV
Vertical	17100.54	61.50	9.70	38.8	44.10	65.90	74.00	-8.10	Pk
Vertical	17100.54	38.47	9.70	38.8	42.70	44.27	54.00	-9.73	AV
Horizontal	11400.43	59.71	8.25	38.57	44.50	62.03	74.00	-11.97	Pk
Horizontal	11400.43	40.39	8.35	38.57	44.50	42.82	54.00	-11.18	AV
Horizontal	17100.58	60.33	9.70	38.38	44.10	64.31	74.00	-9.69	Pk
Horizontal	17100.58	37.80	9.63	38.38	44.10	41.71	54.00	-12.29	AV

Note:"802.11a(5G)" mode is the worst mode. PK value is lower than the Average value limit, So average didn't record.

The amplitude of spurious emissions that are attenuated by more than 20dB below the permissible value

has no need to be reported.

Emission level (dBuV/m) = 20 log Emission level (uV/m).

Corrected Reading: Antenna Factor + Cable Loss + Read Level - Preamp Factor = Level.

EUT：	PINEBOOK Pro	Model Name. ：	14″ PINEBOOK Pro LINUX LAPTOP
Temperature：	20 ℃	Relative Humidity：	48%
Pressure：	1010 hPa	Test Voltage ：	DC 3.8V
Test Mode ：	TX (5.8G) -- 802.11a _5745~5825MHz		

Polar	Frequency	Meter Reading	Cable loss	Antenna Factor	Preamp Factor	Emission Level	Limits	Margin	Detector Type
(H/V)	(MHz)	(dBuV)	(dB)	dB/m	(dB)	(dBuV/m)	(dBuV/m)	(dB)	
Low Channel (5745 MHz)-Above 1G									
Vertical	11490.60	58.10	8.46	39.75	44.50	61.81	74.00	-12.19	Pk
Vertical	11490.60	39.16	8.46	39.75	44.50	42.87	54.00	-11.13	AV
Vertical	17235.65	55.11	10.12	38.80	44.10	59.93	74.00	-14.07	Pk
Vertical	17235.65	36.92	10.12	38.80	42.70	43.14	54.00	-10.86	AV
Horizontal	11490.47	60.65	8.46	38.71	44.50	63.32	74.00	-10.68	Pk
Horizontal	11490.47	43.63	8.46	38.71	44.50	46.30	54.00	-7.70	AV
Horizontal	17235.47	59.81	10.12	38.38	44.10	64.21	74.00	-9.79	Pk
Horizontal	17235.47	37.45	10.12	38.38	44.10	41.85	54.00	-12.15	AV
middle Channel (5785 MHz)-Above 1G									
Vertical	11570.41	59.69	8.47	37.88	44.51	61.53	74.00	-12.47	Pk
Vertical	11570.41	42.53	8.47	37.88	44.51	44.37	54.00	-9.63	AV
Vertical	17355.84	62.93	10.12	38.8	44.10	67.75	74.00	-6.25	Pk
Vertical	17355.84	36.87	10.12	38.8	42.70	43.09	54.00	-10.91	AV
Horizontal	11570.28	62.89	8.47	38.64	44.50	65.50	74.00	-8.50	Pk
Horizontal	11570.28	43.08	8.47	38.64	44.50	45.69	54.00	-8.31	AV
Horizontal	17355.49	63.40	10.12	38.38	44.10	67.80	74.00	-6.20	Pk
Horizontal	17355.49	39.31	10.12	38.38	44.10	43.71	54.00	-10.29	AV
High Channel (5825 MHz)-Above 1G									
Vertical	11652.42	64.49	8.46	37.68	44.50	66.13	74.00	-7.87	Pk
Vertical	11652.42	39.72	8.46	37.68	44.50	41.36	54.00	-12.64	AV
Vertical	17473.74	60.55	10.12	38.8	44.10	65.37	74.00	-8.63	Pk
Vertical	17473.74	37.34	10.12	38.8	42.70	43.56	54.00	-10.44	AV
Horizontal	11652.67	60.39	8.46	38.57	44.50	62.92	74.00	-11.08	Pk
Horizontal	11652.67	44.31	8.46	38.57	44.50	46.84	54.00	-7.16	AV
Horizontal	17474.68	59.06	10.12	38.38	44.10	63.46	74.00	-10.54	Pk
Horizontal	17474.68	39.59	10.12	38.38	44.10	43.99	54.00	-10.01	AV

Note:"802.11a(5G)" mode is the worst mode. PK value is lower than the Average value limit, So average didn't record.
The amplitude of spurious emissions that are attenuated by more than 20dB below the permissible value has no need to be reported.
Emission level (dBuV/m) = 20 log Emission level (uV/m).
Corrected Reading: Antenna Factor + Cable Loss + Read Level - Preamp Factor = Level.

2.2.9 TEST RESULTS (18GHZ-40GHZ)

EUT：	PINEBOOK Pro	Model Name. ：	14″ PINEBOOK Pro LINUX LAPTOP
Temperature：	20 ℃	Relative Humidity：	48%
Pressure：	1010 hPa	Test Voltage ：	DC 3.8V
Test Mode ：	TX (5.2G)-802.11a 5180MHz~5240MHz; TX (5.3G)-802.11a 5260MHz~5320MHz; TX (5.6G)-802.11a 5500MHz~5700MHz; TX (5.8G)-802.11a 5745MHz~5825MHz		

All the modulation modes have been tested, and the worst result was report as below:

Low Channel (5180 MHz)-Above 18G

Horizontal

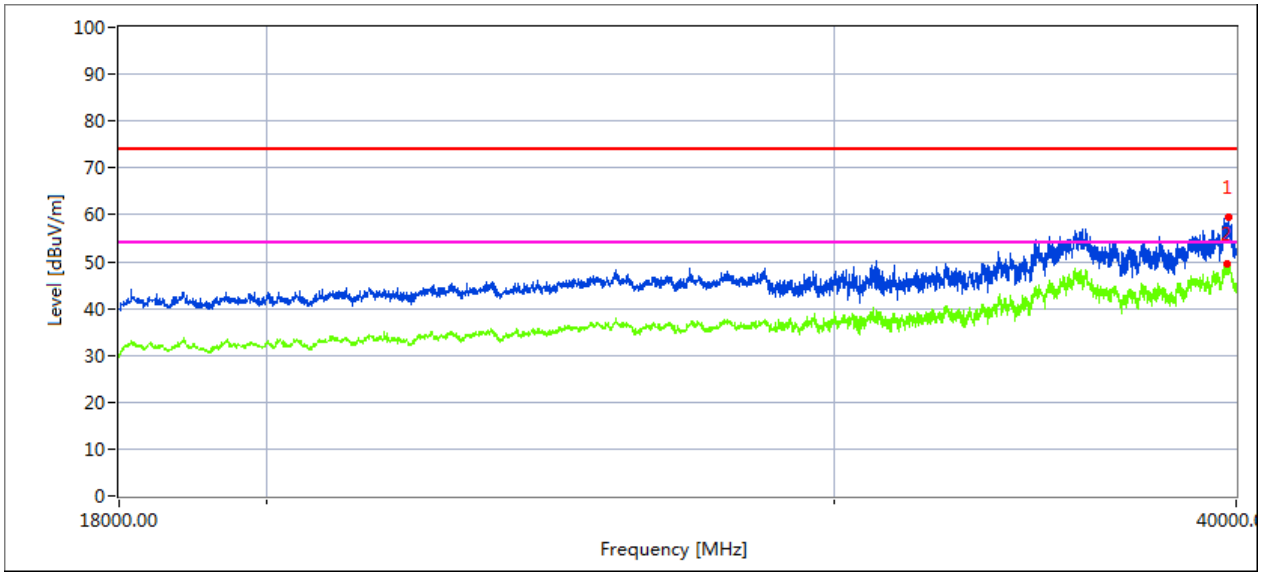

Measurement Result:

Frequency MHz	Pre-scan Level MaxPeak dBuV/m	Final Test Level MaxPeak dBuV/m	Limit MaxPeak dBuV/m	Margin dB
39787.123	58.7	53.3	74.0	19.3
39787.123	49.2	47.6	54.0	6.4

Vertical

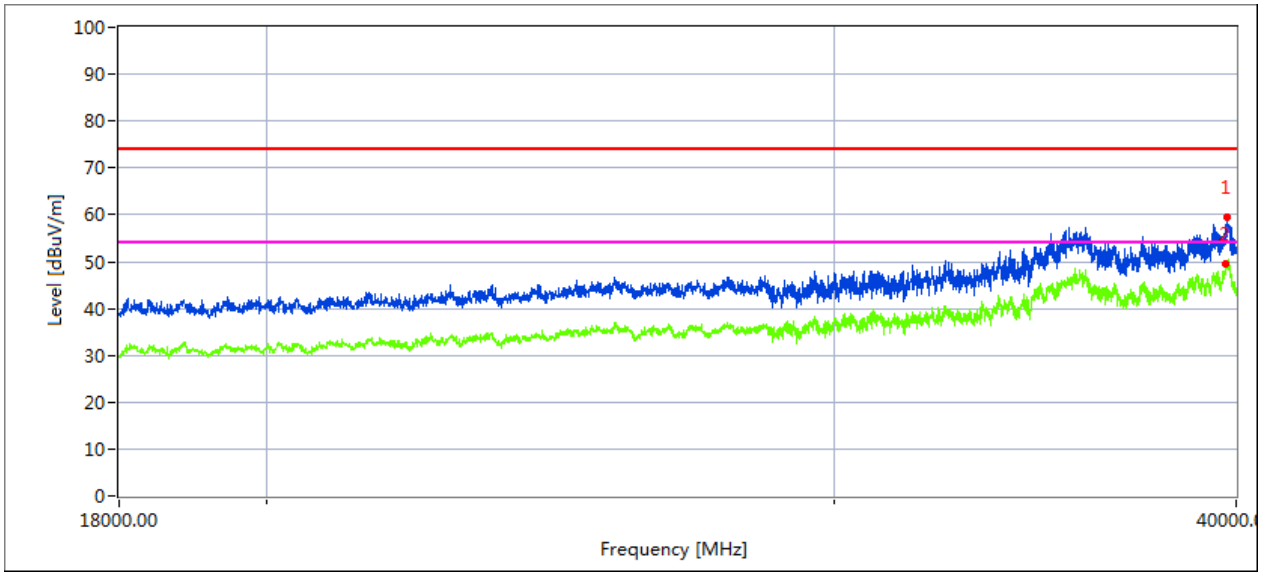

Measurement Result:

Frequency MHz	Pre-scan Level MaxPeak dBuV/m	Final Test Level MaxPeak dBuV/m	Limit MaxPeak dBuV/m	Margin dB
39769.516	59.2	56.1	74.0	17.9
39769.330	49.2	43.1	54.0	10.9

High Channel (5240 MHz)-Above 18G

Horizontal

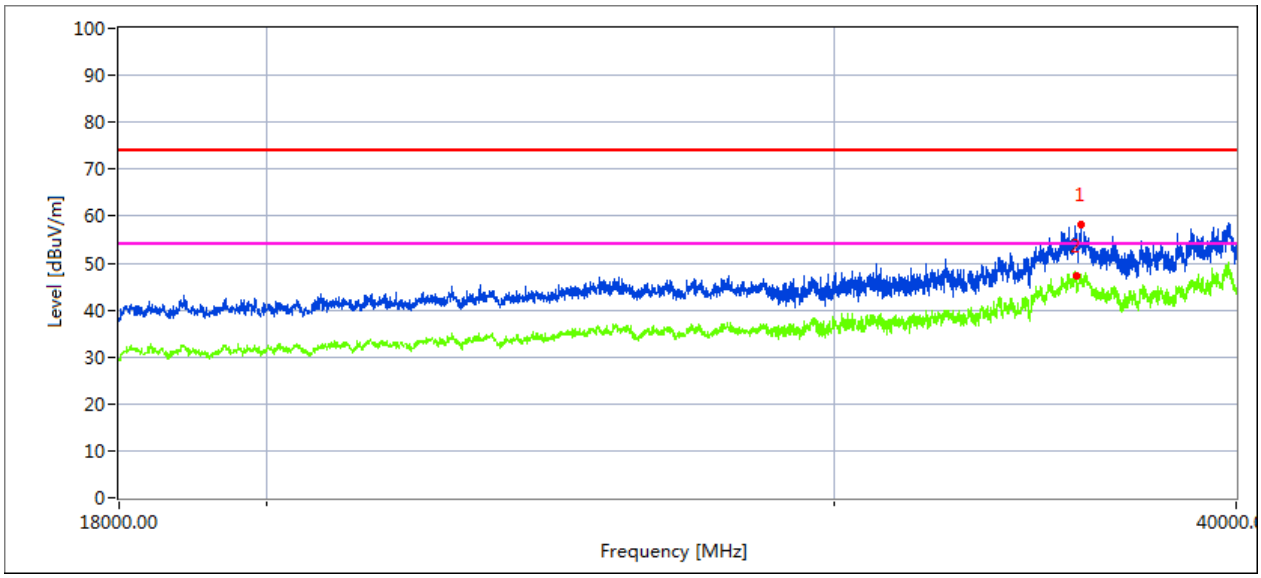

Measurement Result:

Frequency MHz	Pre-scan Level Max dBuV/m	Final Test Level Max dBuV/m	Limit Max dBuV/m	Margin dB	Remark
35628.572	57.4	53.8	74.0	20.2	Peak
35636.113	46.2	44.5	54.0	9.5	AVG

Vertical

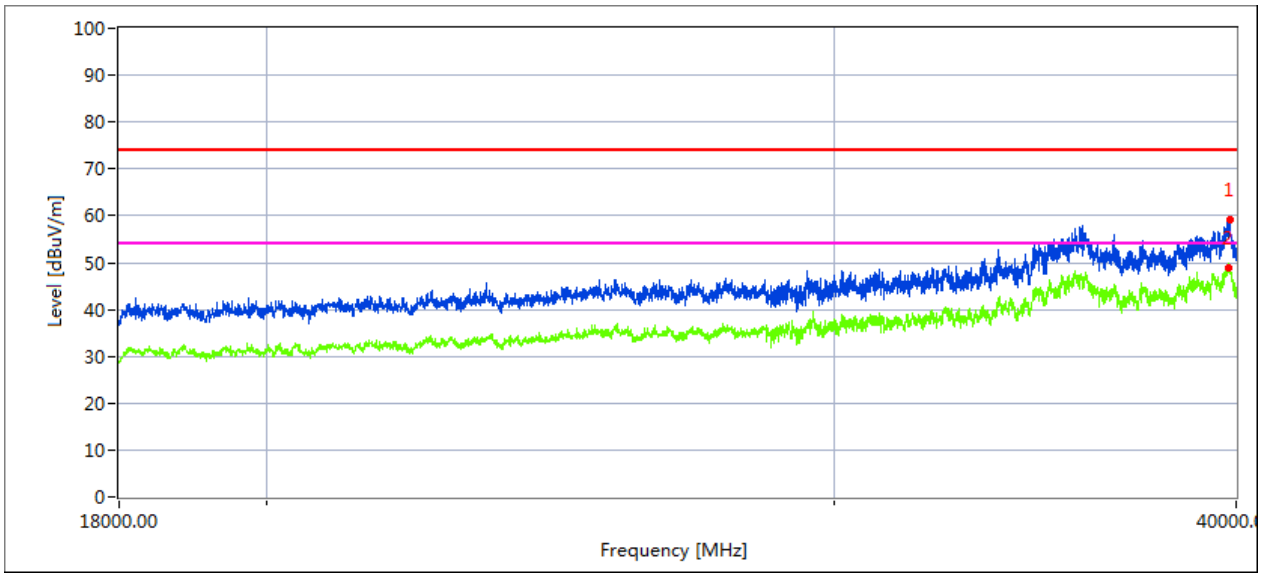

Measurement Result:

Frequency MHz	Pre-scan Level MaxPeak dBuV/m	Final Test Level MaxPeak dBuV/m	Limit MaxPeak dBuV/m	Margin dB
39769.446	58.6	54.8	74.0	19.2
39769.446	48.4	41.6	54.0	13.4

Low Channel (5260 MHz)-Above 18G

Horizontal

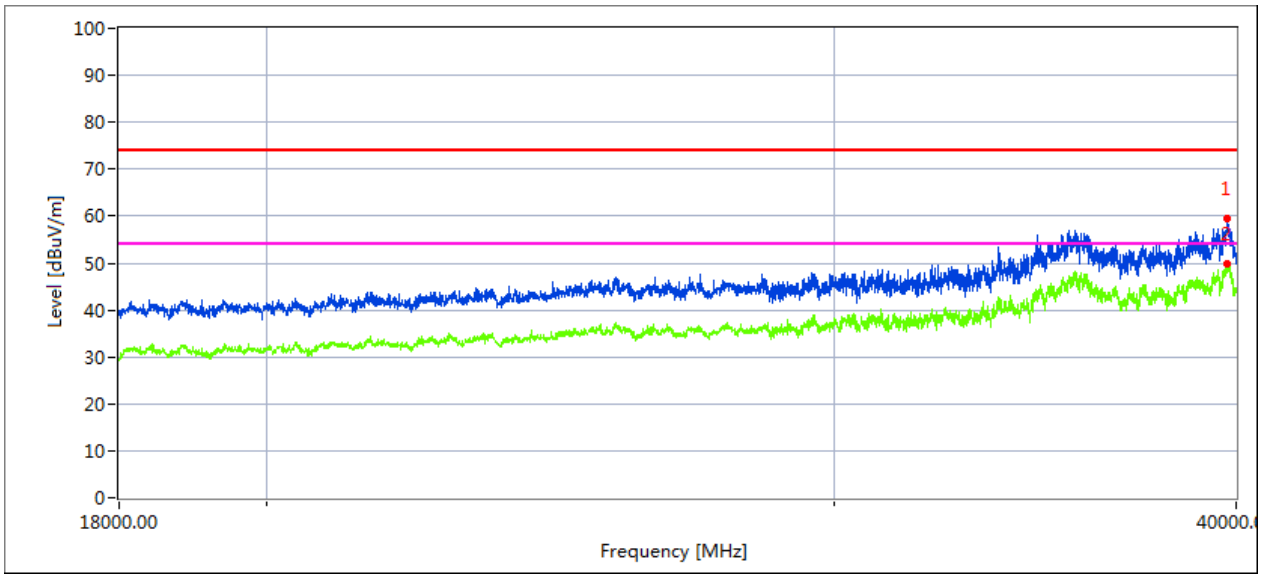

Measurement Result:

Frequency MHz	Pre-scan Level MaxPeak dBuV/m	Final Test Level MaxPeak dBuV/m	Limit MaxPeak dBuV/m	Margin dB
39737.694	59.5	56.3	74.0	17.7
39751.018	50.2	44.5	54.0	9.5

Vertical

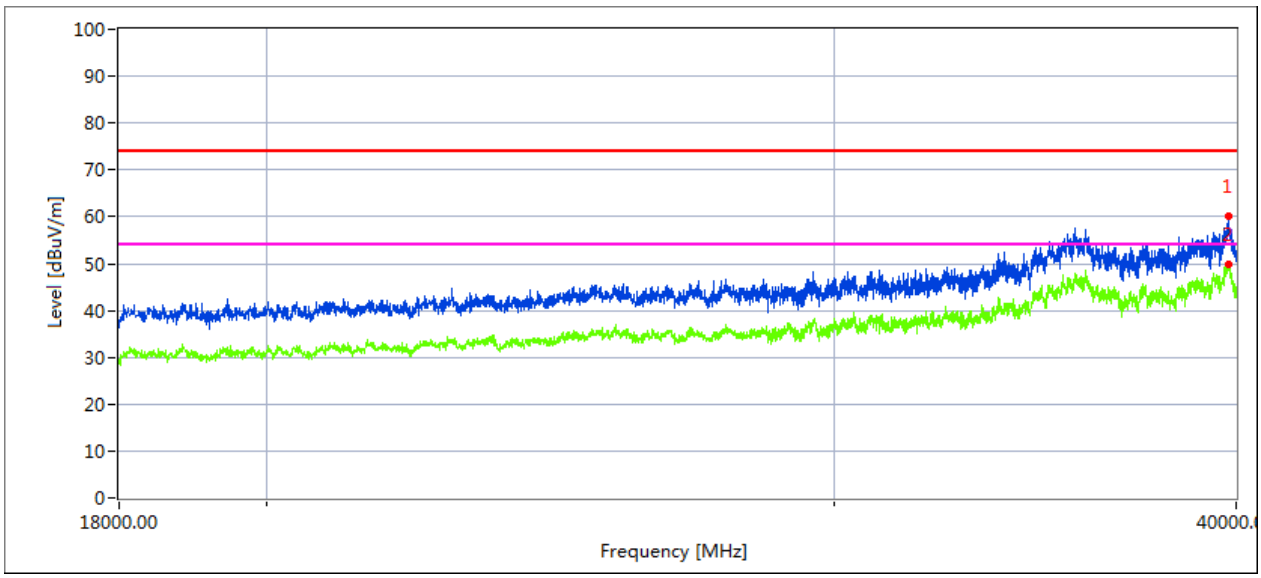

Measurement Result:

Frequency MHz	Pre-scan Level MaxPeak dBuV/m	Final Test Level MaxPeak dBuV/m	Limit MaxPeak dBuV/m	Margin dB
39737.694	59.7	58.8	74.0	15.2
39751.018	50.0	44.2	54.0	9.8

High Channel (5320 MHz)-Above 18G

Horizontal

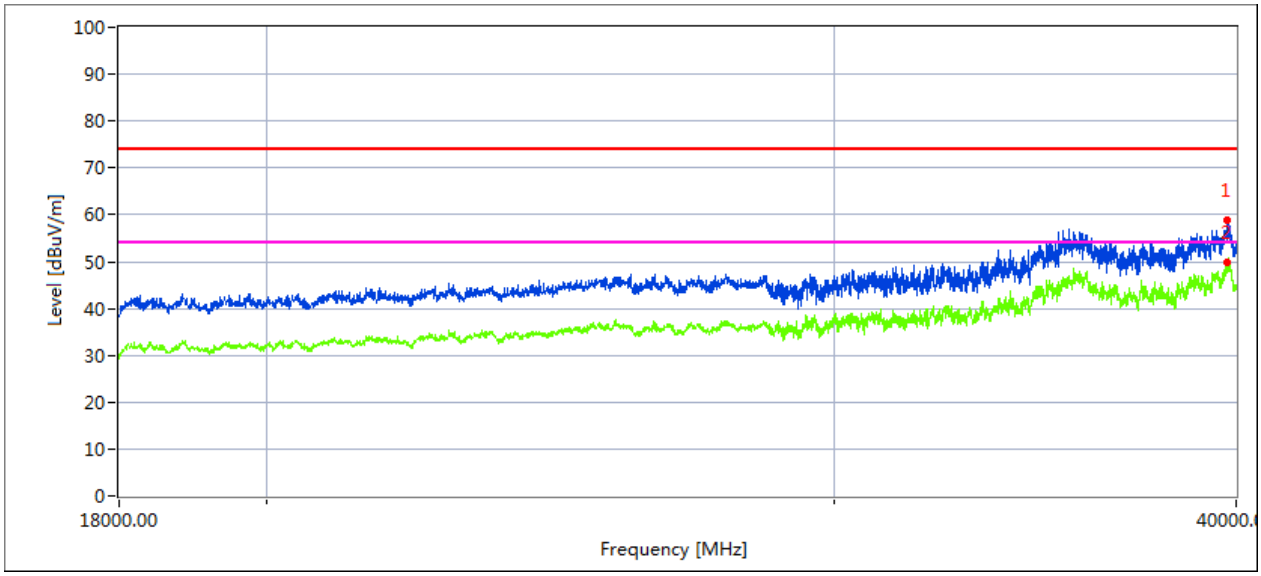

Measurement Result:

Frequency MHz	Pre-scan Level MaxPeak dBuV/m	Final Test Level MaxPeak dBuV/m	Limit MaxPeak dBuV/m	Margin dB
35628.504	58.8	58.5	74.0	15.5
35636.128	49.9	49.1	54.0	4.7

Vertical

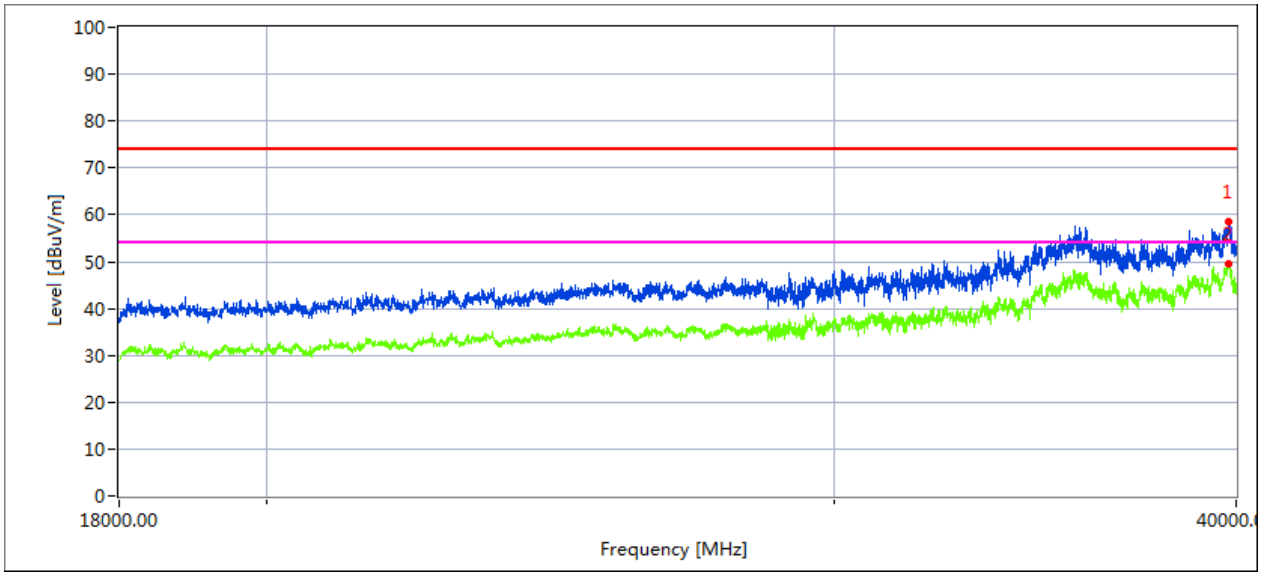

Measurement Result:

Frequency MHz	Pre-scan Level MaxPeak dBuV/m	Final Test Level MaxPeak dBuV/m	Limit MaxPeak dBuV/m	Margin dB
39737.694	57.7	55.2	74.0	18.8
39751.018	49.5	41.4	54.0	12.6

Low Channel (5500 MHz)-Above 18G

Horizontal

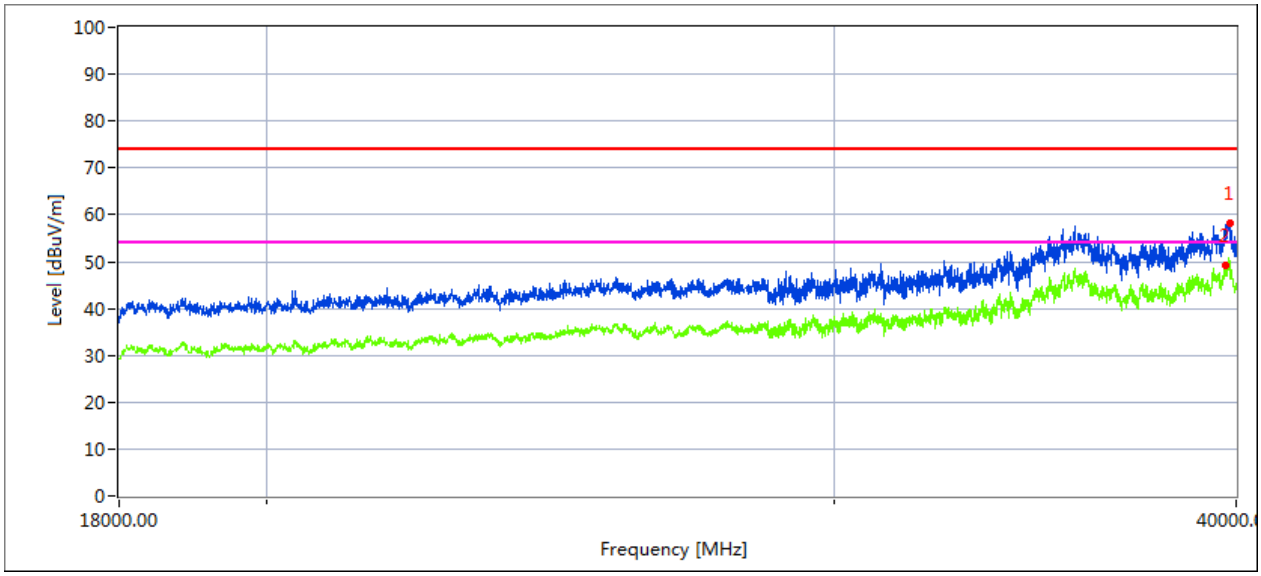

Measurement Result:

Frequency MHz	Pre-scan Level MaxPeak dBuV/m	Final Test Level MaxPeak dBuV/m	Limit MaxPeak dBuV/m	Margin dB
39788.126	58.2	47.8	74.0	26.2
39789.096	49.1	44.7	54.0	9.3

Vertical

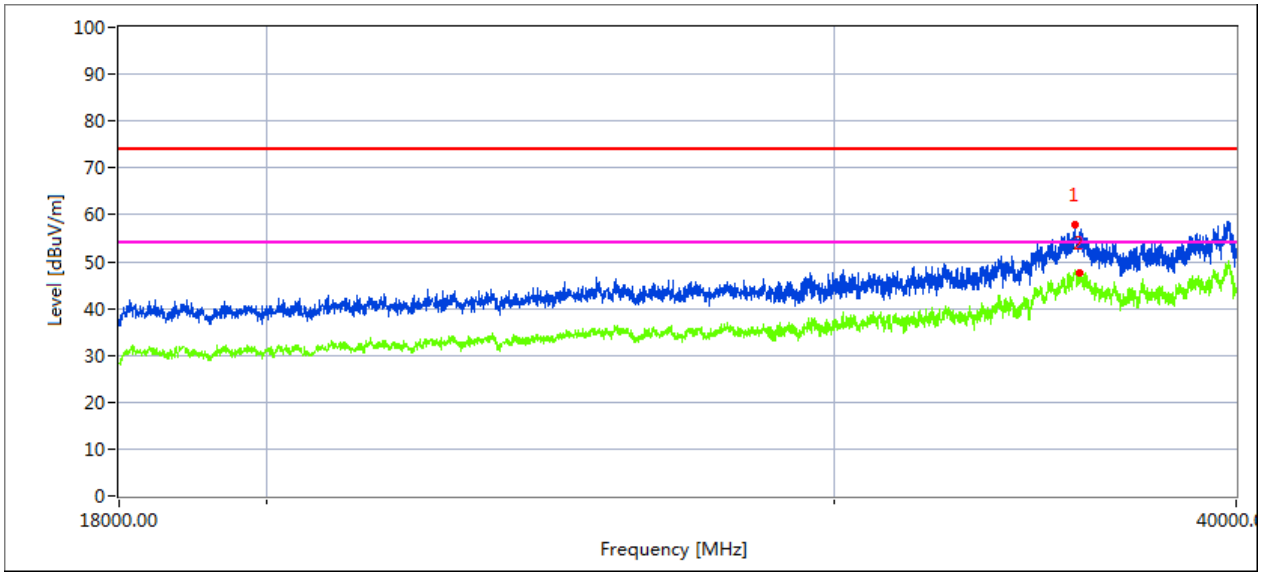

Measurement Result:

Frequency MHz	Pre-scan Level MaxPeak dBuV/m	Final Test Level MaxPeak dBuV/m	Limit MaxPeak dBuV/m	Margin dB
35628.504	57.8	50.9	74.0	23.1
35636.128	47.6	40.3	54.0	13.7

High Channel (5700 MHz)-Above 18G

Horizontal

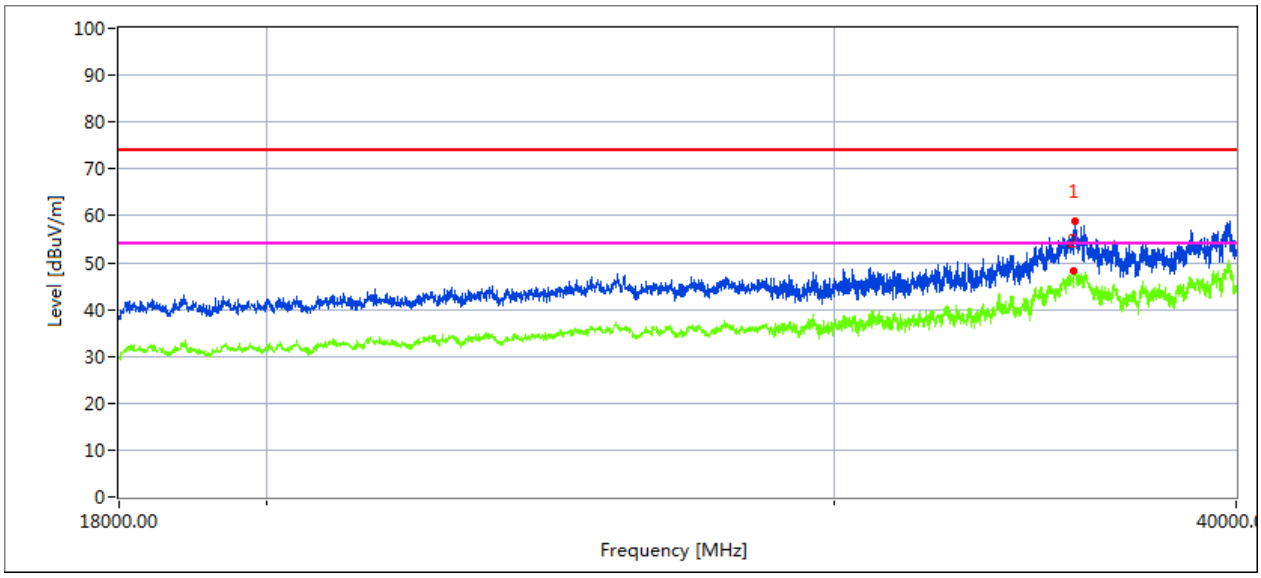

Measurement Result:

Frequency MHz	Pre-scan Level MaxPeak dBuV/m	Final Test Level MaxPeak dBuV/m	Limit MaxPeak dBuV/m	Margin dB
35628.504	58.8	37.2	74.0	36.8
35636.128	48.4	43.9	54.0	10.1

Vertical

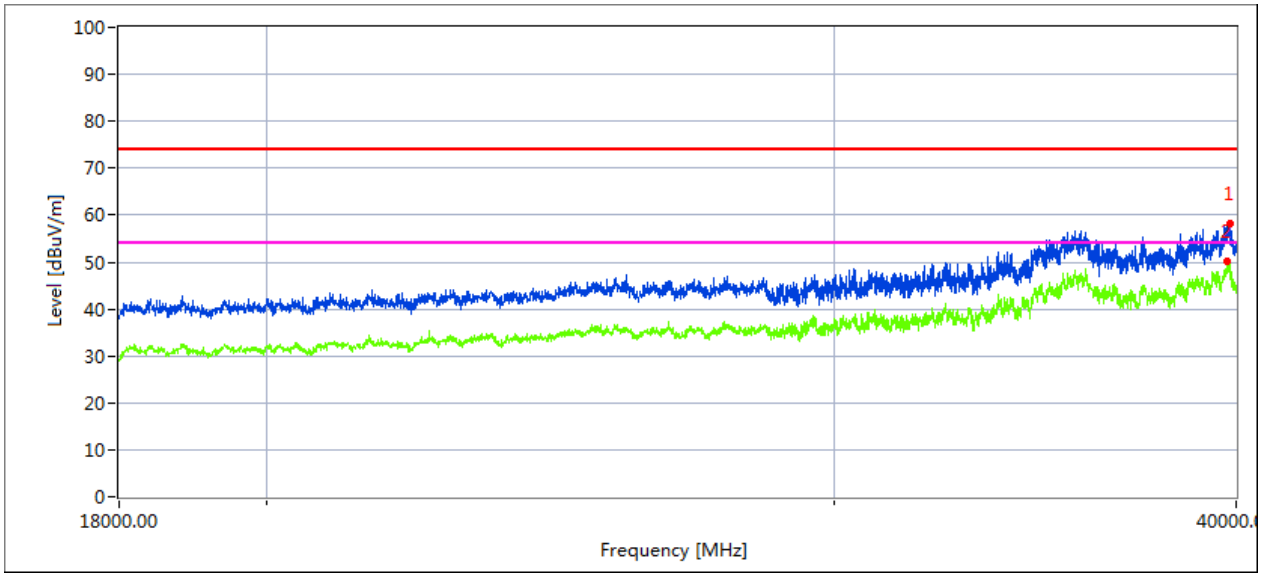

Measurement Result:

Frequency MHz	Pre-scan Level MaxPeak dBuV/m	Final Test Level MaxPeak dBuV/m	Limit MaxPeak dBuV/m	Margin dB
39737.694	58.3	47.7	74.0	26.3
39751.018	50.1	45.4	54.0	8.6

Low Channel (5745 MHz)-Above 18G

Horizontal

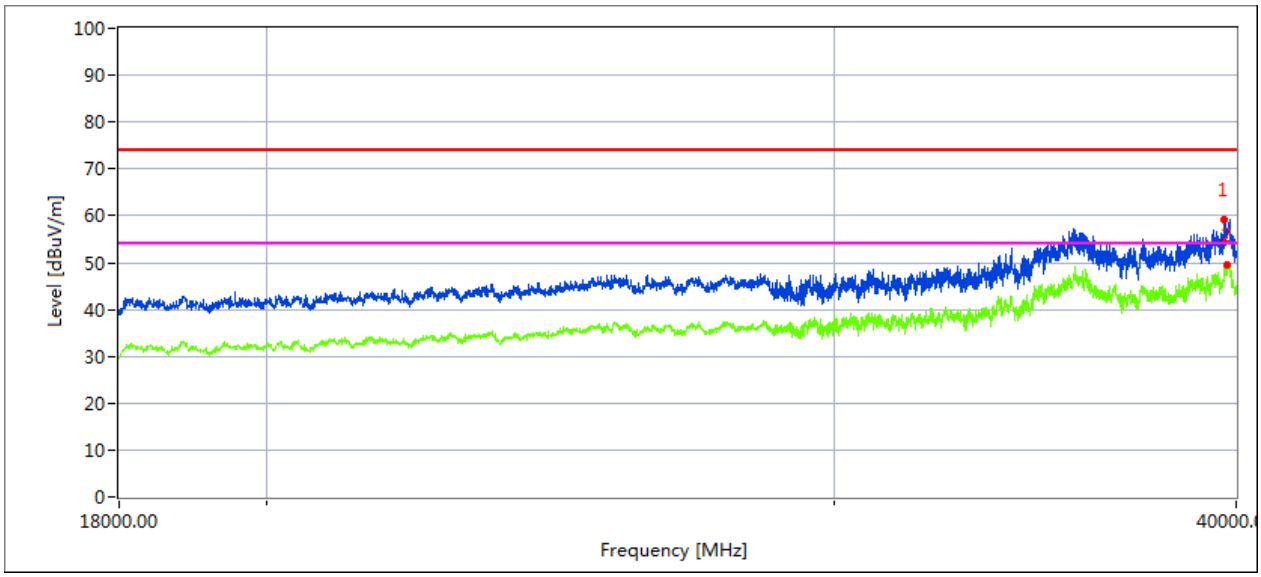

Measurement Result:

Frequency MHz	Pre-scan Level MaxPeak dBuV/m	Final Test Level MaxPeak dBuV/m	Limit MaxPeak dBuV/m	Margin dB
39731.582	59.2	56.8	74.0	17.2
39733.143	49.5	44.7	54.0	9.3

Vertical

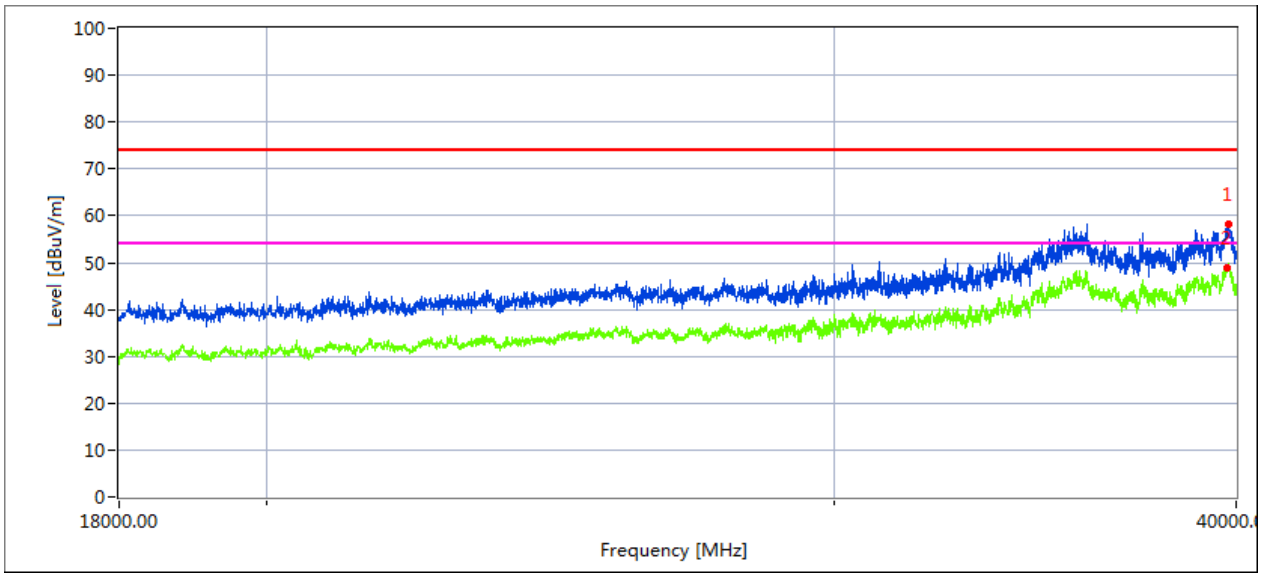

Measurement Result:

Frequency MHz	Pre-scan Level MaxPeak dBuV/m	Final Test Level MaxPeak dBuV/m	Limit MaxPeak dBuV/m	Margin dB
39731.312	58.2	55.6	74.0	18.4
39727.941	48.8	43.5	54.0	10.5

High Channel (5825 MHz)-Above 18G

Horizontal

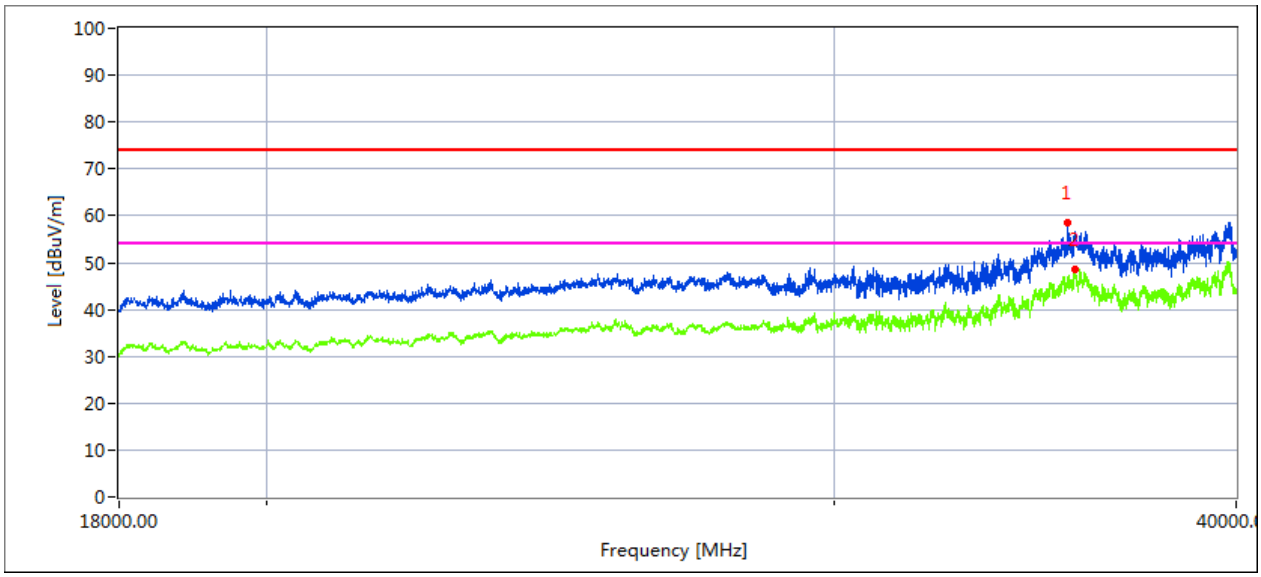

Measurement Result:

Frequency MHz	Pre-scan Level MaxPeak dBuV/m	Final Test Level MaxPeak dBuV/m	Limit MaxPeak dBuV/m	Margin dB
35628.504	58.5	53.7	74.0	20.3
35636.128	48.7	42.9	54.0	11.1

Vertical

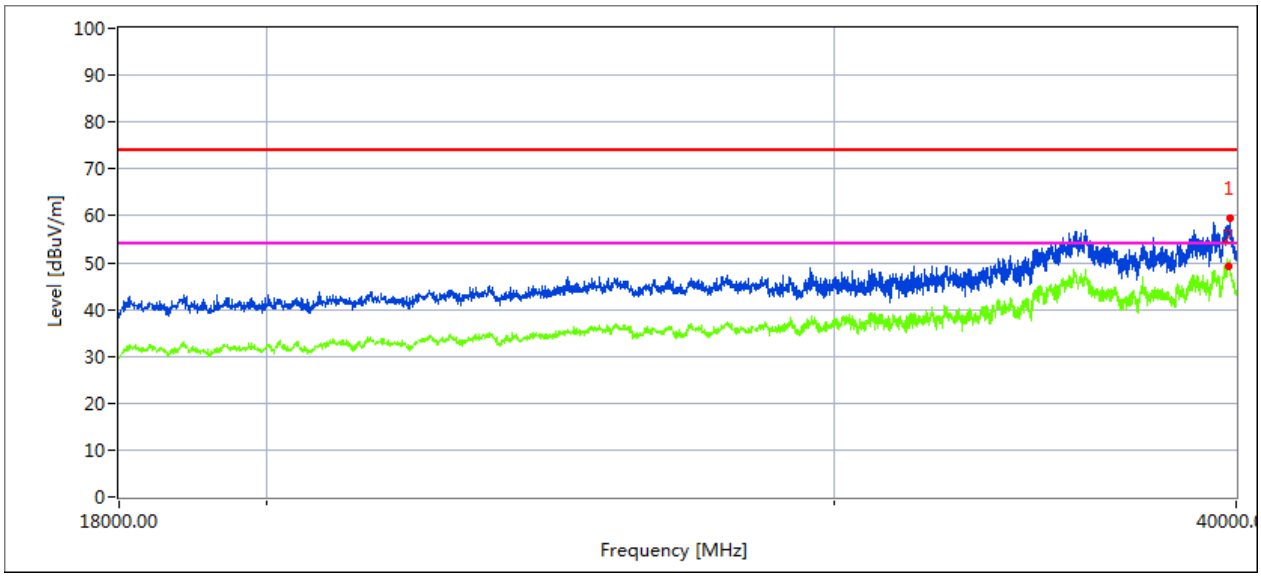

Measurement Result:

Frequency MHz	Pre-scan Level MaxPeak dBuV/m	Final Test Level MaxPeak dBuV/m	Limit MaxPeak dBuV/m	Margin dB
39743.304	59.6	56.3	74.0	17.7
39743.701	49.3	45.2	54.0	8.8

3. POWER SPECTRAL DENSITY TEST

3.1 APPLIED PROCEDURES / LIMIT

According to FCC §15.407(a)

For the band 5.15-5.25 GHz,

(i) For an outdoor access point operating in the band 5.15-5.25 GHz, the maximum power spectral density shall not exceed 17 dBm in any 1 megahertz band. If transmitting antennas of directional gain greater than 6 dBi are used, both the maximum conducted output power and the maximum power spectral density shall be reduced by the amount in dB that the directional gain of the antenna exceeds 6 dBi. The maximum e.i.r.p. at any elevation angle above 30 degrees as measured from the horizon must not exceed 125 mW (21 dBm).
(ii) For an indoor access point operating in the band 5.15-5.25 GHz, the maximum power spectral density shall not exceed 17 dBm in any 1 megahertz band. If transmitting antennas of directional gain greater than 6 dBi are used, both the maximum conducted output power and the maximum power spectral density shall be reduced by the amount in dB that the directional gain of the antenna exceeds 6 dBi.

(iii) For fixed point-to-point access points operating in the band 5.15-5.25 GHz, the maximum power spectral density shall not exceed 17 dBm in any 1 megahertz band. Fixed point-to-point U-NII devices may employ antennas with directional gain up to 23 dBi without any corresponding reduction in the maximum conducted output power or maximum power spectral density. For fixed point-to-point transmitters that employ a directional antenna gain greater than 23 dBi, a 1 dB reduction in maximum conducted output power and maximum power spectral density is required for each 1 dB of antenna gain in excess of 23 dBi. Fixed, point-to-point operations exclude the use of point-to-multipoint systems, omnidirectional applications, and multiple collocated transmitters transmitting the same information. The operator of the U-NII device, or if the equipment is professionally installed, the installer, is responsible for ensuring that systems employing high gain directional antennas are used exclusively for fixed, point-to-point operations.

(iv) For client devices in the 5.15-5.25 GHz band, the maximum power spectral density shall not exceed 11 dBm in any 1 megahertz band. If transmitting antennas of directional gain greater than 6 dBi are used, both the maximum conducted output power and the maximum power spectral density shall be reduced by the amount in dB that the directional gain of the antenna exceeds 6 dBi.

For the 5.25-5.35 GHz and 5.47-5.725 GHz bands, the maximum conducted output power over the frequency bands of operation shall not exceed the lesser of 250 mW or 11 dBm + 10 log B, where B is the 26 dB emission bandwidth in megahertz. In addition, the maximum power spectral density shall not exceed 11 dBm in any 1 megahertz band. If transmitting antennas of directional gain greater than 6 dBi are used, both the maximum conducted output power and the maximum power spectral density shall be reduced by the amount in dB that the directional gain of the antenna exceeds 6 dBi.

For the band 5.725-5.85 GHz

(3)For the band 5.725-5.85 GHz, the maximum power spectral density shall not exceed 30 dBm in any 500-kHz band. If transmitting antennas of directional gain greater than 6 dBi are used, both the maximum conducted output power and the maximum power spectral density shall be reduced by the amount in dB that the directional gain of the antenna exceeds 6 dBi.

,

3.2 TEST PROCEDURE

For devices operating in the bands 5.15-5.25 GHz, 5.25-5.35 GHz, and 5.47-5.725 GHz, the above procedures make use of 1 MHz RBW to satisfy directly the 1 MHz reference bandwidth specified in § 15.407(a)(5). For devices operating in the band 5.725-5.85 GHz, the rules specify a measurement bandwidth of 500 kHz. Many spectrum analyzers do not have 500 kHz RBW, thus a narrower RBW may need to be used. The rules permit the use of a RBWs less than 1 MHz, or 500 kHz, "provided that the measured power is integrated over the full reference bandwidth" to show the total power over the specified measurement bandwidth (i.e., 1 MHz, or 500 kHz). If measurements are performed using a reduced resolution bandwidth (< 1 MHz, or < 500 kHz) and integrated over 1 MHz, or 500 KHz bandwidth, the following adjustments to the procedures apply:

a) Set RBW ≥ 1/T, where T is defined in section II.B.I.a).

b) Set VBW ≥ 3 RBW.

c) If measurement bandwidth of Maximum PSD is specified in 500 kHz, add 10log(500kHz/RBW) to the measured result, whereas RBW (< 500 KHz) is the reduced resolution bandwidth of the spectrum analyzer set during measurement.

d) If measurement bandwidth of Maximum PSD is specified in 1 MHz, add 10log(1MHz/RBW) to the measured result, whereas RBW (< 1 MHz) is the reduced resolution bandwidth of spectrum analyzer set during measurement.

e) Care must be taken to ensure that the measurements are performed during a period of continuous transmission or are corrected upward for duty cycle.

Note: As a practical matter, it is recommended to use reduced RBW of 100 KHz for the sections 5.c) and 5.d) above, since RBW=100 KHZ is available on nearly all spectrum analyzers.

3.3 DEVIATION FROM STANDARD

No deviation.

3.4 TEST SETUP

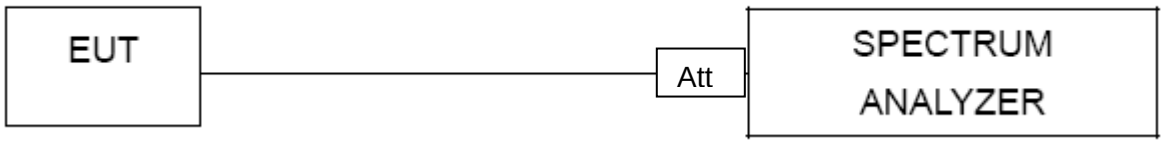

3.5 EUT OPERATION CONDITIONS

The EUT tested system was configured as the statements of 2.1 Unless otherwise a special operating condition is specified in the follows during the testing.

3.6 TEST RESULTS

EUT：	PINEBOOK Pro	Model Name. ：	14″ PINEBOOK Pro LINUX LAPTOP
Temperature：	25 ℃	Relative Humidity：	56%
Pressure：	1015 hPa	Test Voltage ：	DC 3.8V
Test Mode ：	TX Frequency Band 1 (5150-5250MHz), Band 2A (5250-5350MHz), Band 2C (5470-5725MHz), Band 3 (5745-5825MHz)		

Test data reference attachment.

4. 26DB & 99% EMISSION BANDWIDTH

4.1 APPLIED PROCEDURES / LIMIT

The maximum power spectral density is measured as a conducted emission by direct connection of a calibrated test instrument to the equipment under test. If the device cannot be connected directly, alternative techniques acceptable to the Commission may be used. Measurements in the 5.725-5.85 GHz band are made over a reference bandwidth of 500 kHz or the 26 dB emission bandwidth of the device, whichever is less. Measurements in the 5.15-5.25 GHz, 5.25-5.35 GHz, and the 5.47-5.725 GHz bands are made over a bandwidth of 1 MHz or the 26 dB emission bandwidth of the device, whichever is less. A narrower resolution bandwidth can be used, provided that the measured power is integrated over the full reference bandwidth.

4.2 TEST PROCEDURE

a) Set RBW = approximately 1% of the emission bandwidth.

b) Set the VBW > RBW.

c) Detector = Peak.

d) Trace mode = max hold.

e) Measure the maximum width of the emission that is 26 dB down from the maximum of the emission. Compare this with the RBW setting of the analyzer. Readjust RBW and repeat measurement as needed until the RBW/EBW ratio is approximately 1%.

The following procedure shall be used for measuring (99 %) power bandwidth:

1. Set center frequency to the nominal EUT channel center frequency.
2. Set span = 1.5 times to 5.0 times the OBW.
3. Set RBW = 1 % to 5 % of the OBW
4. Set VBW ≥ 3 · RBW
5. Video averaging is not permitted. Where practical, a sample detection and single sweep mode shall be used. Otherwise, peak detection and max hold mode (until the trace stabilizes) shall be used.
6. Use the 99 % power bandwidth function of the instrument (if available).
7. If the instrument does not have a 99 % power bandwidth function, the trace data points are recovered and directly summed in power units. The recovered amplitude data points, beginning at the lowest frequency, are placed in a running sum until 0.5 % of the total is reached; that frequency is recorded as the lower frequency. The process is repeated until 99.5 % of the total is reached; that frequency is recorded as the upper frequency. The 99% occupied bandwidth is the difference between these two frequencies.

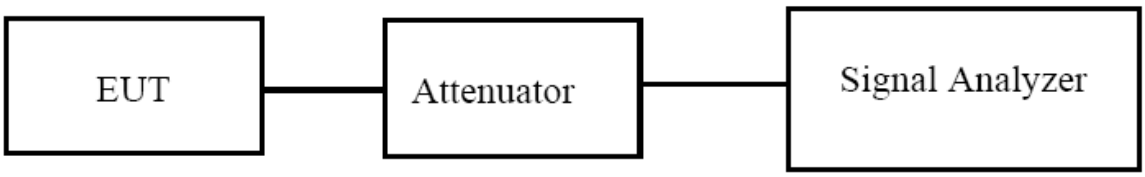

4.3 EUT OPERATION CONDITIONS

The EUT tested system was configured as the statements of 2.4 Unless otherwise a special operating condition is specified in the follows during the testing.

4.4 TEST RESULTS

EUT：	PINEBOOK Pro	Model Name. ：	14″ PINEBOOK Pro LINUX LAPTOP
Temperature：	25 ℃	Relative Humidity：	56%
Pressure：	1012 hPa	Test Voltage ：	DC 3.8V
Test Mode ：	TX Frequency Band 1 (5150-5250MHz), Band 2A (5250-5350MHz), Band 2C(5470-5725MHz), Band 3(5725-5850MHz)		

Test data reference attachment.

5. MINIMUM 6 DB BANDWIDTH

5.1 APPLIED PROCEDURES / LIMIT

According to FCC §15.407(e)
(e) Within the 5.725-5.85 GHz band, the minimum 6 dB bandwidth of U-NII devices shall be at least 500 kHz.

5.2 TEST PROCEDURE

Section 15.407(e) specifies the minimum 6 dB emission bandwidth of at least 500 KHz for the band 5.715-5.85 GHz. The following procedure shall be used for measuring this bandwidth:

a) Set RBW = 100 kHz.

b) Set the video bandwidth (VBW) ≥ 3 × RBW.

c) Detector = Peak.

d) Trace mode = max hold.

e) Sweep = auto couple.

f) Allow the trace to stabilize.

g) Measure the maximum width of the emission that is constrained by the frequencies associated with the two outermost amplitude points (upper and lower frequencies) that are attenuated by 6 dB relative to the maximum level measured in the fundamental emission.

5.3 DEVIATION FROM STANDARD

No deviation.

5.4 TEST SETUP

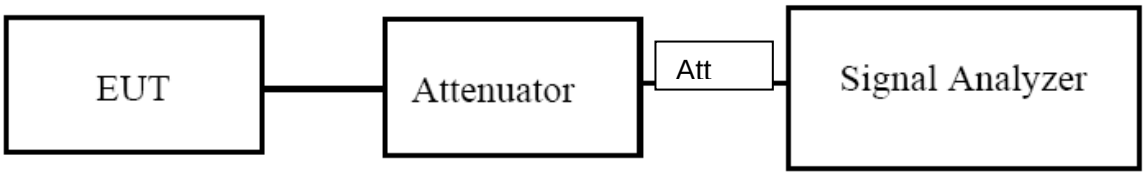

5.5 EUT OPERATION CONDITIONS

The EUT tested system was configured as the statements of 2.4 Unless otherwise a special operating condition is specified in the follows during the testing.

5.6 TEST RESULTS

EUT：	PINEBOOK Pro	Model Name. ：	14″ PINEBOOK Pro LINUX LAPTOP
Temperature：	25 ℃	Relative Humidity：	60%
Pressure：	1012 hPa	Test Voltage ：	DC 3.8V
Test Mode ：	TX (5G) Mode Frequency Band 3 (5725-5850MHz)		

Test data reference attachment.

6. MAXIMUM CONDUCTED OUTPUT POWER

6.1 PPLIED PROCEDURES / LIMIT

According to FCC §15.407

The maximum conduced output power should not exceed:

The maximum conduced output power should not exceed:

Frequency Band(MHz)	Limit
5150~5250	250mW
5725~5850	1W

The maximum e.i.r.p should not exceed:

Frequency Band(MHz)	Limit
5150~5250	200mW or 10dBm +10logB whichever is less
5725~5850	N/A

Note: Where “B” is the 99% emission bandwidth in MHz

6.2 TEST PROCEDURE

· Method PM is Measurement using an RF average power meter. The procedure for this method is as follows:

a) Measurements may be performed using a wideband RF power meter with a thermocouple detector or equivalent if all of the following conditions are satisfied:

1) The EUT is configured to transmit continuously, or to transmit with a constant duty cycle.

2) At all times when the EUT is transmitting, it shall be transmitting at its maximum power control level.

3) The integration period of the power meter exceeds the repetition period of the transmitted signal by at least a factor of five.

b) If the transmitter does not transmit continuously, measure the duty cycle D of the transmitter output signal as described in 12.2.

c) Measure the average power of the transmitter. This measurement is an average over both the ON and OFF periods of the transmitter.

d) Adjust the measurement in dBm by adding [10 log (1 / D)], where D is the duty cycle {e.g., [10 log (1 / 0.25)], if the duty cycle is 25%}.

6.3 DEVIATION FROM STANDARD

No deviation.

6.4 TEST SETUP

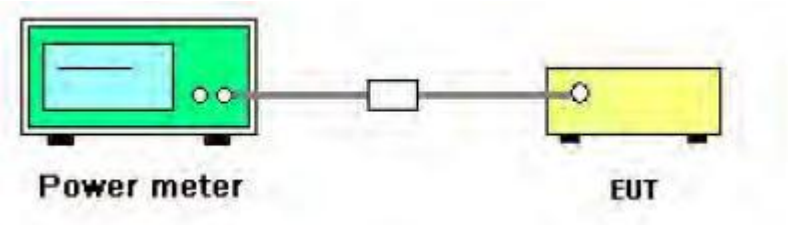

6.5 EUT OPERATION CONDITIONS

The EUT tested system was configured as the statements of 2.4 Unless otherwise a special operating condition is specified in the follows during the testing.

6.2 TEST RESULTS

EUT：	PINEBOOK Pro	Model Name. ：	14″ PINEBOOK Pro LINUX LAPTOP
Temperature：	25 ℃	Relative Humidity：	60%
Pressure：	1012 hPa	Test Voltage ：	DC 3.8V
Test Mode ：	TX (5G) Mode Frequency Band 1 (5150-5250MHz), Band 2A (5250-5350MHz) Band 2C, (5470-5725MHz), Band 3 (5725-5850MHz)		

Test data reference attachment.

7. OUT OF BAND EMISSIONS

7.1 APPLICABLE STANDARD

According to FCC §15.407(b)

Undesirable emission limits. Except as shown in paragraph (b)(7) of this section, the maximum emissions outside of the frequency bands of operation shall be attenuated in accordance with the following limits:

(1) For transmitters operating in the 5.15-5.25 GHz band: All emissions outside of the 5.15-5.35 GHz band shall not exceed an e.i.r.p. of −27 dBm/MHz.

(2) For transmitters operating in the 5.25-5.35 GHz band: All emissions outside of the 5.15-5.35 GHz band shall not exceed an e.i.r.p. of −27 dBm/MHz.

(3) For transmitters operating in the 5.47-5.725 GHz band: All emissions outside of the 5.47-5.725 GHz band shall not exceed an e.i.r.p. of −27 dBm/MHz.

(4) For transmitters operating in the 5.725-5.85 GHz band: All emissions within the frequency range from the band edge to 10 MHz above or below the band edge shall not exceed an e.i.r.p. of −17 dBm/MHz; for frequencies 10 MHz or greater above or below the band edge, emissions shall not exceed an e.i.r.p. of −27 dBm/MHz.

7.2 TEST PROCEDURE

1. Check the calibration of the measuring instrument using either an internal calibrator or a known signal from an external generator.
2. Position the EUT without connection to measurement instrument. Turn on the EUT and connect its antenna terminal to measurement instrument via a low loss cable. Then set it to any one measured frequency within its operating range, and make sure the instrument is operated in its linear range.
3. Set RBW of spectrum analyzer to 1 MHz with a convenient frequency span.
4. Measure the highest amplitude appearing on spectral display and set it as a reference level. Plot the graph with marking the highest point and edge frequency.
5. Repeat above procedures until all measured frequencies were complete.

7.3 DEVIATION FROM STANDARD

No deviation.

7.4 TEST SETUP

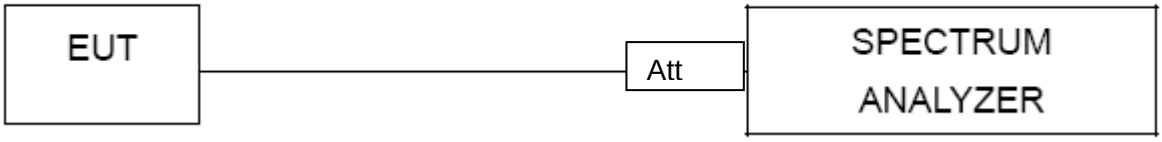

7.5 EUT OPERATION CONDITIONS

The EUT tested system was configured as the statements of 2.4 Unless otherwise a special operating condition is specified in the follows during the testing.

7.6 TEST RESULTS

EUT：	PINEBOOK Pro	Model Name. ：	14″ PINEBOOK Pro LINUX LAPTOP
Temperature：	25 ℃	Relative Humidity：	56%
Pressure：	1012 hPa	Test Voltage ：	DC 3.8V

Test data reference attachment.

9.SPURIOUS RF CONDUCTED EMISSIONS

9.1CONFORMANCE LIMIT

According to FCC §15.407(b)(1) (2) (3)

9.**2** Measuring Instruments

The Measuring equipment is listed in the section 6.3 of this test report.

9.3 Test Setup

Please refer to Section 6.1 of this test report.

9.4 Test Procedure

The Spurious RF conducted emissions compliance of RF radiated emission should be measured by following the guidance in ANSI C63.10-2013 with respect to maximizing the emission by rotating the EUT, measuring the emission while the EUT is situated in three orthogonal planes (if appropriate), adjusting the measurement antenna height and polarization etc. Set RBW=100kHz and VBW= 300KHz to measure the peak field strength , and measure frequency range from 1GHz to 26.5GHz.

9.5 Test Results

Remark: The measurement frequency range is from 1GHz to the 10th harmonic of the fundamental frequency. The lowest, middle and highest channels are tested to verify the spurious emissions and bandege measurement data.

10. FREQUENCY STABILITY MEASUREMENT

10.1 LIMIT

Manufactures of U-NII devices are responsible for ensuring frequency stability such that an emission is maintained within the band of operation under all conditions of normal operation as specified in the user's manual.

The transmitter center frequency tolerance shall be ± 20 ppm maximum for the 5 GHz band (IEEE 802.11n specification).

10.2 TEST PROCEDURES

1. The transmitter output (antenna port) was connected to the spectrum analyzer.
2. EUT have transmitted absence of modulation signal and fixed channelize.
3. Set the spectrum analyzer span to view the entire absence of modulation emissions bandwidth.
4. Set RBW = 10 kHz, VBW = 10 kHz with peak detector and maxhold settings.
5. fc is declaring of channel frequency. Then the frequency error formula is (fc-f)/fc × 10_6 ppm and the limit is less than ±20ppm (IEEE 802.11nspecification).
6. The test extreme voltage is to change the primary supply voltage from 85 to 115 percent of the nominal value
7. Extreme temperature is -20°C~70°C.

10.3 TEST SETUP LAYOUT

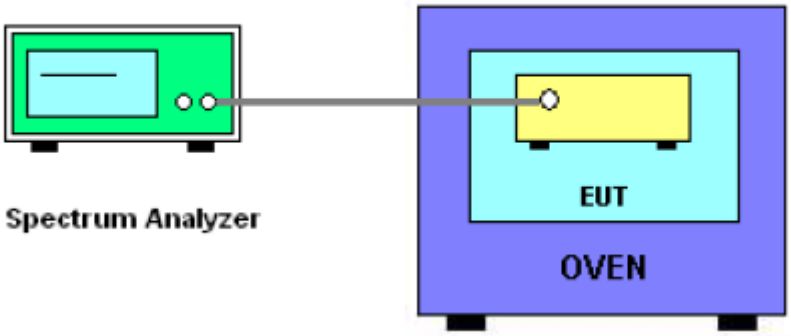

10.4 EUT OPERATION DURING TEST

The EUT was programmed to be in continuously un-modulation transmitting mode.

10.5 TEST RESULTS

EUT：	PINEBOOK Pro	Model Name. ：	14″ PINEBOOK Pro LINUX LAPTOP
Temperature：	25 ℃	Relative Humidity：	56%
Pressure：	1012 hPa	Test Voltage ：	DC 3.8V
Test Mode ：	TX Frequency Band I (5150-5250MHz)		

Voltage vs. Frequency Stability

TEST CONDITIONS				Reference Frequency：5180MHz			
				f	fc	Max. Deviation (MHz)	Max. Deviation (ppm)
T nom (°C)	20	V nom (V)	3.8	5180.0413	5180	-0.0413	-7.9730
		V max (V)	4.4	5180.0228	5180	-0.0228	-4.4015
		V min (V)	3.4	5180.0137	5180	-0.0137	-2.6448
Limits				Within 5150-5250MHz			
Result				Complies			

Temperature vs. Frequency Stability

TEST CONDITIONS				Reference Frequency：5180MHz			
				f	fc	Max. Deviation (MHz)	Max. Deviation (ppm)
V nom (V)	3.8	T (°C)	-30	5180.0274	5180	-0.0274	-5.2896
		T (°C)	-20	5180.0135	5180	-0.0135	-2.6062
		T (°C)	-10	5180.0331	5180	-0.0331	-6.3900
		T (°C)	0	5180.0260	5180	-0.0260	-5.0193
		T (°C)	10	5180.0148	5180	-0.0148	-2.8571
		T (°C)	20	5180.0413	5180	-0.0413	-7.9730
		T (°C)	30	5180.0181	5180	-0.0181	-3.4942
		T (°C)	40	5180.0150	5180	-0.0150	-2.8958
		T (°C)	50	5180.0153	5180	-0.0153	-2.9537
		T (°C)	60	5180.0166	5180	-0.0166	-3.2046
		T (°C)	70	5180.0178	5180	-0.0178	-3.4363
		T (°C)	80	5180.0166	5180	-0.0166	-3.2046
Limits				Within 5150-5250MHz			
Result				Complies			

Voltage vs. Frequency Stability

TEST CONDITIONS				Reference Frequency：5200MHz			
				f	fc	Max. Deviation (MHz)	Max. Deviation (ppm)
T nom (°C)	20	V nom (V)	3.8	5200.0078	5200	-0.0078	-1.5000
		V max (V)	4.4	5200.0182	5200	-0.0182	-3.5000
		V min (V)	3.4	5200.0143	5200	-0.0143	-2.7500
Limits				Within 5150-5250MHz			
Result				Complies			

Temperature vs. Frequency Stability

TEST CONDITIONS				Reference Frequency：5200MHz			
				f	fc	Max. Deviation (MHz)	Max. Deviation (ppm)
V nom (V)	3.8		-30	5200.0535	5200	-0.0535	-10.2885
		T (°C)	-20	5200.0146	5200	-0.0146	-2.8077
		T (°C)	-10	5200.0130	5200	-0.0130	-2.5000
		T (°C)	0	5200.0223	5200	-0.0223	-4.2885
		T (°C)	10	5200.0154	5200	-0.0154	-2.9615
		T (°C)	20	5200.0078	5200	-0.0078	-1.5000
		T (°C)	30	5200.0456	5200	-0.0456	-8.7692
		T (°C)	40	5200.0162	5200	-0.0162	-3.1154
		T (°C)	50	5200.0197	5200	-0.0197	-3.7885
		T (°C)	60	5200.0388	5200	-0.0388	-7.4615
		T (°C)	70	5200.0147	5200	-0.0147	-2.8269
		T (°C)	80	5200.0169	5200	-0.0169	-3.2500
Limits				Within 5150-5250MHz			
Result				Complies			

Voltage vs. Frequency Stability

TEST CONDITIONS				Reference Frequency：5240MHz			
				f	fc	Max. Deviation (MHz)	Max. Deviation (ppm)
T nom (°C)	20	V nom (V)	3.8	5240.0135	5240	-0.0135	-2.5763
		V max (V)	4.4	5240.0146	5240	-0.0146	-2.7863
		V min (V)	3.4	5240.0133	5240	-0.0133	-2.5382
Limits				Within 5150-5250MHz			
Result				Complies			

Temperature vs. Frequency Stability

TEST CONDITIONS				Reference Frequency：5240MHz			
				f	fc	Max. Deviation (MHz)	Max. Deviation (ppm)
V nom (V)	3.8	T (°C)	-30	5240.0196	5240	-0.0196	-3.7405
		T (°C)	-20	5240.0178	5240	-0.0178	-3.3969
		T (°C)	-10	5240.0103	5240	-0.0103	-1.9656
		T (°C)	0	5240.0152	5240	-0.0152	-2.9008
		T (°C)	10	5240.0330	5240	-0.0330	-6.2977
		T (°C)	20	5240.0135	5240	-0.0135	-2.5763
		T (°C)	30	5240.0189	5240	-0.0189	-3.6069
		T (°C)	40	5240.0185	5240	-0.0185	-3.5305
		T (°C)	50	5240.0146	5240	-0.0146	-2.7863
		T (°C)	60	5240.0133	5240	-0.0133	-2.5382
		T (°C)	70	5240.0119	5240	-0.0119	-2.2710
		T (°C)	80	5240.0152	5240	-0.0152	-2.9008
Limits				Within 5150-5250MHz			
Result				Complies			

EUT：	PINEBOOK Pro	Model Name. ：	14″ PINEBOOK Pro LINUX LAPTOP
Temperature：	25 ℃	Relative Humidity：	56%
Pressure：	1012 hPa	Test Voltage ：	DC 3.8V
Test Mode ：	TX Frequency Band 2A (5250-5350MHz)		

Voltage vs. Frequency Stability

TEST CONDITIONS				Reference Frequency：5260MHz			
				f	fc	Max. Deviation (MHz)	Max. Deviation (ppm)
T nom (°C)	20	V nom (V)	3.8	5260.0160	5260	-0.0160	-3.0418
		V max (V)	4.4	5260.0140	5260	-0.0140	-2.6616
		V min (V)	3.4	5260.0191	5260	-0.0191	-3.6312
Limits				Within 5250-5350MHz			
Result				Complies			

Temperature vs. Frequency Stability

TEST CONDITIONS				Reference Frequency：5260MHz			
				f	fc	Max. Deviation (MHz)	Max. Deviation (ppm)
V nom (V)	3.8	T (°C)	-30	5260.0153	5260	-0.0153	-2.9087
		T (°C)	-20	5260.0264	5260	-0.0264	-5.0190
		T (°C)	-10	5260.0117	5260	-0.0117	-2.2243
		T (°C)	0	5260.0352	5260	-0.0352	-6.6920
		T (°C)	10	5260.0133	5260	-0.0133	-2.5285
		T (°C)	20	5260.0160	5260	-0.0160	-3.0418
		T (°C)	30	5260.0438	5260	-0.0438	-8.3270
		T (°C)	40	5260.0145	5260	-0.0145	-2.7567
		T (°C)	50	5260.0063	5260	-0.0063	-1.1977
		T (°C)	60	5260.0226	5260	-0.0226	-4.2966
		T (°C)	70	5260.0210	5260	-0.0210	-3.9924
		T (°C)	80	5260.0221	5260	-0.0221	-4.2015
Limits				Within 5250-5350MHz			
Result				Complies			

Voltage vs. Frequency Stability

TEST CONDITIONS				Reference Frequency：5280MHz			
				f	fc	Max. Deviation (MHz)	Max. Deviation (ppm)
T nom (°C)	20	V nom (V)	3.8	5280.0122	5280	-0.0122	-2.3125
		V max (V)	4.4	5280.0145	5280	-0.0145	-2.7462
		V min (V)	3.4	5280.0122	5280	-0.0122	-2.3106
Limits				Within 5250-5350MHz			
Result				Complies			

Temperature vs. Frequency Stability

TEST CONDITIONS				Reference Frequency：5280MHz			
				f	fc	Max. Deviation (MHz)	Max. Deviation (ppm)
V nom (V)	3.8	T (°C)	-30	5280.0147	5280	-0.0147	-2.7860
		T (°C)	-20	5280.0166	5280	-0.0166	-3.1458
		T (°C)	-10	5280.0153	5280	-0.0153	-2.8996
		T (°C)	0	5280.0093	5280	-0.0093	-1.7614
		T (°C)	10	5280.0100	5280	-0.0100	-1.8958
		T (°C)	20	5280.0122	5280	-0.0122	-2.3106
		T (°C)	30	5280.0080	5280	-0.0080	-1.5152
		T (°C)	40	5280.0166	5280	-0.0166	-3.1458
		T (°C)	50	5280.0107	5280	-0.0107	-2.0284
		T (°C)	60	5280.0164	5280	-0.0164	-3.1061
		T (°C)	70	5280.0588	5280	-0.0588	-11.1364
		T (°C)	80	5280.0180	5280	-0.0180	-3.4091
Limits				Within 5250-5350MHz			
Result				Complies			

Voltage vs. Frequency Stability

TEST CONDITIONS				Reference Frequency：5320MHz			
				f	fc	Max. Deviation (MHz)	Max. Deviation (ppm)
T nom (°C)	20	V nom (V)	3.8	5320.0461	5320	-0.0461	-8.6654
		V max (V)	4.4	5320.0188	5320	-0.0188	-3.5357
		V min (V)	3.4	5320.0165	5320	-0.0165	-3.1034
Limits				Within 5250-5350MHz			
Result				Complies			

Temperature vs. Frequency Stability

TEST CONDITIONS				Reference Frequency：5320MHz			
				f	fc	Max. Deviation (MHz)	Max. Deviation (ppm)
V nom (V)	3.8	T (°C)	-30	5320.0154	5320	-0.0154	-2.8947
		T (°C)	-20	5320.0170	5320	-0.0170	-3.1955
		T (°C)	-10	5320.0103	5320	-0.0103	-1.9361
		T (°C)	0	5320.0131	5320	-0.0131	-2.4624
		T (°C)	10	5320.0246	5320	-0.0246	-4.6241
		T (°C)	20	5320.0461	5320	-0.0461	-8.6654
		T (°C)	30	5320.0116	5320	-0.0116	-2.1805
		T (°C)	40	5320.0237	5320	-0.0237	-4.4549
		T (°C)	50	5320.0174	5320	-0.0174	-3.2726
		T (°C)	60	5320.0056	5320	-0.0056	-1.0526
		T (°C)	70	5320.0332	5320	-0.0332	-6.2406
		T (°C)	80	5320.0141	5320	-0.0141	-2.6429
Limits				Within 5250-5350MHz			
Result				Complies			

EUT：	PINEBOOK Pro	Model Name. ：	14″ PINEBOOK Pro LINUX LAPTOP
Temperature：	25 ℃	Relative Humidity：	56%
Pressure：	1012 hPa	Test Voltage ：	DC 3.8V
Test Mode ：	TX Frequency Band 2C (5470-5725MHz)		

Voltage vs. Frequency Stability

TEST CONDITIONS				Reference Frequency：5500MHz			
				f	fc	Max. Deviation (MHz)	Max. Deviation (ppm)
T nom (°C)	20	V nom (V)	3.8	5500.0141	5500	-0.0141	-2.5636
		V max (V)	4.4	5500.0212	5500	-0.0212	-3.8491
		V min (V)	3.4	5500.0316	5500	-0.0316	-5.7418
Limits				Within 5470-5725MHz			
Result				Complies			

Temperature vs. Frequency Stability

TEST CONDITIONS				Reference Frequency：5500MHz			
				f	fc	Max. Deviation (MHz)	Max. Deviation (ppm)
V nom (V)	3.8	T (°C)	-30	5500.0332	5500	-0.0332	-6.0364
		T (°C)	-20	5500.0156	5500	-0.0156	-2.8364
		T (°C)	-10	5500.0193	5500	-0.0193	-3.5091
		T (°C)	0	5500.0463	5500	-0.0463	-8.4182
		T (°C)	10	5500.0278	5500	-0.0278	-5.0545
		T (°C)	20	5500.0141	5500	-0.0141	-2.5636
		T (°C)	30	5500.0046	5500	-0.0046	-0.8345
		T (°C)	40	5500.0117	5500	-0.0117	-2.1273
		T (°C)	50	5500.0115	5500	-0.0115	-2.0891
		T (°C)	60	5500.0119	5500	-0.0119	-2.1636
		T (°C)	70	5500.0183	5500	-0.0183	-3.3273
		T (°C)	80	5500.0187	5500	-0.0187	-3.4000
Limits				Within 5470-5725MHz			
Result				Complies			

Voltage vs. Frequency Stability

TEST CONDITIONS				Reference Frequency：5600MHz			
				f	fc	Max. Deviation (MHz)	Max. Deviation (ppm)
T nom (°C)	20	V nom (V)	3.8	5600.0165	5600	-0.0165	-2.9464
		V max (V)	4.4	5600.0146	5600	-0.0146	-2.6071
		V min (V)	3.4	5600.0157	5600	-0.0157	-2.8036
Limits				Within 5470-5725MHz			
Result				Complies			

Temperature vs. Frequency Stability

TEST CONDITIONS				Reference Frequency：5600MHz			
				f	fc	Max. Deviation (MHz)	Max. Deviation (ppm)
V nom (V)	3.8	T (°C)	-30	5600.0152	5600	-0.0152	-2.7143
		T (°C)	-20	5600.0152	5600	-0.0152	-2.7143
		T (°C)	-10	5600.0166	5600	-0.0166	-2.9643
		T (°C)	0	5600.0146	5600	-0.0146	-2.6071
		T (°C)	10	5600.0178	5600	-0.0178	-3.1786
		T (°C)	20	5600.0165	5600	-0.0165	-2.9464
		T (°C)	30	5600.0103	5600	-0.0103	-1.8393
		T (°C)	40	5600.0132	5600	-0.0132	-2.3571
		T (°C)	50	5600.0156	5600	-0.0156	-2.7857
		T (°C)	60	5600.0137	5600	-0.0137	-2.4464
		T (°C)	70	5600.0144	5600	-0.0144	-2.5750
		T (°C)	80	5600.0164	5600	-0.0164	-2.9286
Limits				Within 5470-5725MHz			
Result				Complies			

Voltage vs. Frequency Stability

TEST CONDITIONS				Reference Frequency：5700MHz			
				f	fc	Max. Deviation (MHz)	Max. Deviation (ppm)
T nom (°C)	20	V nom (V)	3.8	5700.0159	5700	-0.0159	-2.7895
		V max (V)	4.4	5700.0164	5700	-0.0164	-2.8772
		V min (V)	3.4	5700.0160	5700	-0.0160	-2.8070
Limits				Within 5470-5725MHz			
Result				Complies			

Temperature vs. Frequency Stability

TEST CONDITIONS				Reference Frequency：5700MHz			
				f	fc	Max. Deviation (MHz)	Max. Deviation (ppm)
V nom (V)	3.8	T (°C)	-30	5700.0164	5700	-0.0164	-2.8772
		T (°C)	-20	5700.0115	5700	-0.0115	-2.0246
		T (°C)	-10	5700.0152	5700	-0.0152	-2.6667
		T (°C)	0	5700.0046	5700	-0.0046	-0.8053
		T (°C)	10	5700.0153	5700	-0.0153	-2.6842
		T (°C)	20	5700.0159	5700	-0.0159	-2.7895
		T (°C)	30	5700.0120	5700	-0.0120	-2.1018
		T (°C)	40	5700.0135	5700	-0.0135	-2.3684
		T (°C)	50	5700.0164	5700	-0.0164	-2.8772
		T (°C)	60	5700.0130	5700	-0.0130	-2.2807
		T (°C)	70	5700.0188	5700	-0.0188	-3.2982
		T (°C)	80	5700.0163	5700	-0.0163	-2.8596
Limits				Within 5470-5725MHz			
Result				Complies			

EUT：	PINEBOOK Pro	Model Name. ：	14″ PINEBOOK Pro LINUX LAPTOP
Temperature：	25 ℃	Relative Humidity：	56%
Pressure：	1012 hPa	Test Voltage ：	DC 3.8V
Test Mode ：	TX Frequency(5745-5825MHz)		

Voltage vs. Frequency Stability

TEST CONDITIONS				Reference Frequency：5745MHz			
				f	fc	Max. Deviation (MHz)	Max. Deviation (ppm)
T nom (°C)	20	V nom (V)	3.8	5745.0183	5745	-0.0183	-3.1854
		V max (V)	4.4	5745.0126	5745	-0.0126	-2.1932
		V min (V)	3.4	5745.0196	5745	-0.0196	-3.4117
Limits				Within 5725-5850MHz			
Result				Complies			

Temperature vs. Frequency Stability

TEST CONDITIONS				Reference Frequency：5745MHz			
				f	fc	Max. Deviation (MHz)	Max. Deviation (ppm)
V nom (V)	3.8	T (°C)	-30	5745.0154	5745	-0.0154	-2.6806
		T (°C)	-20	5745.0184	5745	-0.0184	-3.2028
		T (°C)	-10	5745.0168	5745	-0.0168	-2.9243
		T (°C)	0	5745.0103	5745	-0.0103	-1.7929
		T (°C)	10	5745.0120	5745	-0.0120	-2.0888
		T (°C)	20	5745.0183	5745	-0.0183	-3.1854
		T (°C)	30	5745.0108	5745	-0.0108	-1.8799
		T (°C)	40	5745.0151	5745	-0.0151	-2.6284
		T (°C)	50	5745.0147	5745	-0.0147	-2.5587
		T (°C)	60	5745.0133	5745	-0.0133	-2.3151
		T (°C)	70	5745.0111	5745	-0.0111	-1.9321
		T (°C)	80	5745.0131	5745	-0.0131	-2.2802
Limits				Within 5725-5850MHz			
Result				Complies			

Voltage vs. Frequency Stability

TEST CONDITIONS				Reference Frequency：5785MHz			
				f	fc	Max. Deviation (MHz)	Max. Deviation (ppm)
T nom (°C)	20	V nom (V)	3.8	5785.0110	5785	-0.0110	-1.9015
		V max (V)	4.4	5785.0157	5785	-0.0157	-2.7139
		V min (V)	3.4	5785.0136	5785	-0.0136	-2.3509
Limits				Within 5725-5850MHz			
Result				Complies			

Temperature vs. Frequency Stability

TEST CONDITIONS				Reference Frequency：5785MHz			
				f	fc	Max. Deviation (MHz)	Max. Deviation (ppm)
V nom (V)	3.8	T (°C)	-30	5785.0089	5785	-0.0089	-1.5385
		T (°C)	-20	5785.0117	5785	-0.0117	-2.0225
		T (°C)	-10	5785.0138	5785	-0.0138	-2.3855
		T (°C)	0	5785.0169	5785	-0.0169	-2.9213
		T (°C)	10	5785.0100	5785	-0.0100	-1.7286
		T (°C)	20	5785.0147	5785	-0.0147	-2.5411
		T (°C)	30	5785.0114	5785	-0.0114	-1.9706
		T (°C)	40	5785.0090	5785	-0.0090	-1.5557
		T (°C)	50	5785.0132	5785	-0.0132	-2.2818
		T (°C)	60	5785.0162	5785	-0.0162	-2.8003
		T (°C)	70	5785.0163	5785	-0.0163	-2.8176
		T (°C)	80	5785.0132	5785	-0.0132	-2.2818
Limits				Within 5725-5850MHz			
Result				Complies			

Voltage vs. Frequency Stability

TEST CONDITIONS				Reference Frequency：5825MHz			
				f	fc	Max. Deviation (MHz)	Max. Deviation (ppm)
T nom (°C)	20	V nom (V)	3.8	5825.0095	5825	-0.0095	-1.6309
		V max (V)	4.4	5825.0126	5825	-0.0126	-2.1631
		V min (V)	3.4	5825.0182	5825	-0.0182	-3.1245
Limits				Within 5725-5850MHz			
Result				Complies			

Temperature vs. Frequency Stability

TEST CONDITIONS				Reference Frequency：5825MHz			
				f	fc	Max. Deviation (MHz)	Max. Deviation (ppm)
V nom (V)	3.8	T (°C)	-30	5825.0134	5825	-0.0134	-2.3004
		T (°C)	-20	5825.0101	5825	-0.0101	-1.7339
		T (°C)	-10	5825.0156	5825	-0.0156	-2.6781
		T (°C)	0	5825.0110	5825	-0.0110	-1.8884
		T (°C)	10	5825.0091	5825	-0.0091	-1.5622
		T (°C)	20	5825.0100	5825	-0.0100	-1.7167
		T (°C)	30	5825.0178	5825	-0.0178	-3.0558
		T (°C)	40	5825.0160	5825	-0.0160	-2.7468
		T (°C)	50	5825.0100	5825	-0.0100	-1.7167
		T (°C)	60	5825.0174	5825	-0.0174	-2.9871
		T (°C)	70	5825.0145	5825	-0.0145	-2.4893
		T (°C)	80	5825.0121	5825	-0.0121	-2.0773
Limits				Within 5725-5850MHz			
Result				Complies			

11. DYNAMIC FREQUENCY SELECTION(DFS)

11.1 APPLICABILITY OF DFS REQUIREMENTS

EUT is client and operates as client without radar detection function.

Table 1: Applicability of DFS Requirements Prior to Use of a Channel

Requirement	Operational Mode		
	Master	Client Without Radar Detection	Client With Radar Detection
Non-Occupancy Period	Yes	Not required	Yes
DFS Detection Threshold	Yes	Not required	Yes
Channel Availability Check Time	Yes	Not required	Not required
U-NII Detection Bandwidth	Yes	Not required	Yes

Table 2: Applicability of DFS requirements during normal operation

Requirement	Operational Mode		
	Master	Client Without Radar Detection	Client With Radar Detection
DFS Detection Threshold	Yes	Not required	Yes
Channel Closing Transmission Time	Yes	Yes	Yes
Channel Move Time	Yes	Yes	Yes
U-NII Detection Bandwidth	Yes	Not required	Yes
Client Beacon Test	N/A	Yes	Yes

Additional requirements for devices with multiple bandwidth modes	Operational Mode	
	Master or Client With Radar Detection	Client Without Radar Detection
U-NII Detection Bandwidth and Statistical Performance Check	All BW modes must be tested	Not required
Channel Move Time and Channel Closing Transmission Time	Test using widest BW mode available	Test using the widest BW mode available for the link
All other tests	Any single BW mode	Not required

Note
Frequencies selected for statistical performance check (Section 7.8.4) should include several frequencies within the radar detection bandwidth and frequencies near the edge of the radar detection bandwidth. For 802.11 devices it is suggested to select frequencies in each of the bonded 20 MHz channels and the channel center frequency.

11.2 INTERFERENCE THRESHOLD VALUES, MASTER OR CLIENT INCORPORATING IN-SERVICE MONITORING

Maximum Transmit Power	Value (see notes 1, 2, and 3)
EIRP ≥ 200 milliwatt	-64 dBm
EIRP < 200 milliwatt and power spectral density < 10 dBm/MHz	-62 dBm
EIRP < 200 milliwatt that do not meet the power spectral density requirement	-64 dBm

Note 1: This is the level at the input of the receiver assuming a 0 dBi receive antenna.
Note 2: Throughout these test procedures an additional 1 dB has been added to the amplitude of the test transmission waveforms to account for variations in measurement equipment. This will ensure that the test signal is at or above the detection threshold level to trigger a DFS response.
Note 3: EIRP is based on the highest antenna gain.

11.3 DFS RESPONSE REQUIREMENT VALUES

Parameter	Value
Non-occupancy period	Minimum 30 minutes
Channel Availability Check Time	60 seconds
Channel Move Time	10 seconds See Note 1.
Channel Closing Transmission Time	200 milliseconds + an aggregate of 60 milliseconds over remaining 10 second period. See Notes 1 and 2.
U-NII Detection Bandwidth	Minimum 100% of the 99% power bandwidth See Note 3.

Note 1: The instant that the Channel Move Time and the Channel Closing Transmission Time begins is as follows:
• For the Short pulse radar Test Signals this instant is the end of the Burst.
• For the Frequency Hopping radar Test Signal, this instant is the end of the last radar Burst generated.
• For the Long Pulse radar Test Signal this instant is the end of the 12 second period defining the radar transmission.
Note 2: The Channel Closing Transmission Time is comprised of 200 milliseconds starting at the beginning of the Channel Move Time plus any additional intermittent control signals required to facilitate Channel changes (an aggregate of 60 milliseconds) during the remainder of the 10 second period. The aggregate duration of control signals will not count quiet periods in between transmissions.
Note 3: During the U-NII Detection Bandwidth detection test, radar type 0 is used and for each frequency step the minimum percentage of detection is 90%. Measurements are performed with no data traffic.

11.4 SHORT PULSE RADAR TEST WAVEFORMS

As the EUT is a Client Device with no Radar Detection, only one type radar pulse is required for the testing. Radar Pulse type 0 was used in the evaluation of the Client device for the purpose of measuring the Channel Move Time and the Channel Closing Transmission Time.

Radar Type	Pulse Width (μsec)	PRI (μsec)	Number of Pulses	Minimum Percentage of Successful Detection	Minimum Trials
0	1	1428	18	60%	30
1	1	Test A Test B	$\mathrm{Roundup}\left\{\left(\frac{1}{360}\right)\cdot\left(\frac{19\cdot 10^6}{\mathrm{PRI}_{\mu sec}}\right)\right\}$	60%	30
2	1-5	150-230	23-29	60%	30
3	6-10	200-500	16-18	60%	30
4	11-20	200-500	12-16	60%	30
Aggregate (Radar Types 1-4)				80%	120

Test A: 15 unique PRI values randomly selected from the list of 23 PRI values in Table 5a
Test B: 15 unique PRI values randomly selected within the range of 518-3066 μsec, with a minimum increment of 1 μsec, excluding PRI values selected in Test A

A minimum of 30 unique waveforms are required for each of the short pulse radar types 2 through 4. For short pulse radar type 1, the same waveform is used a minimum of 30 times. If more than 30 waveforms are used for short pulse radar types 2 through 4, then each additional waveform must also be unique and not repeated from the previous waveforms.
If more than 30 waveforms are used for Short Pulse Radar Type 1, then each additional waveform is generated with Test B and must also be unique and not repeated from the previous waveforms in Tests A or B. The aggregate is the average of the percentage of successful detections of short pulse radar types 1-4.

11.5 CALIBRATION SETUP AND DFS TEST RESULTS

Radar Waveform Calibration Procedure

1) A 50 ohm load is connected in place of the spectrum analyzer, and the spectrum analyzer is connected to place of the master

2) The interference Radar Detection Threshold Level is -62dBm + 0dBi +1dB = -61dBm that had been taken into account the output power range and antenna gain.

3) The following equipment setup was used to calibrate the conducted radar waveform. A vector signal generator was utilized to establish the test signal level for radar type 0. During this process there were no transmissions by either the master or client device. The spectrum analyzer was switched to the zero spans (time domain) at the frequency of the radar waveform generator. Peak detection was used. The spectrum analyzer resolution bandwidth (RBW) and video bandwidth (VBW) were set to 3 MHz. The spectrum analyzer had offset -1.0dB to compensate RF cable loss 1.0dB.

4) The vector signal generator amplitude was set so that the power level measured at the spectrum analyzer was - -62dBm + 0dBi +1dB = -61dBm. Capture the spectrum analyzer plots on short pulse radar waveform.

11.6 CONDUCTED CALIBRATION SETUP

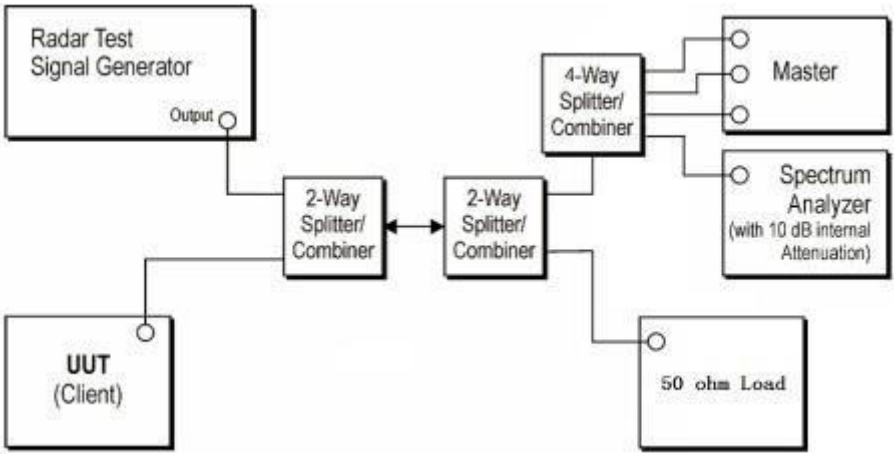

11.7 RADAR WAVEFORM CALIBRATION RESULT

Test data reference attachment.

11.8 IN-SERVICE MONITORING: CHANNEL MOVE TIME, CHANNEL CLOSING TRANSMISSION TIME AND NON-OCCUPANCY PERIOD

TEST CONFIGURATION:

Setup for Client with injection at the Master

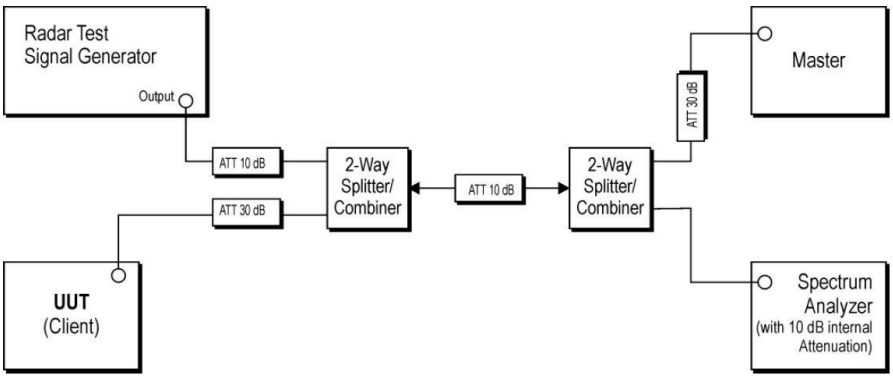

TEST PROCEDURE:

1. The radar pulse generator is setup to provide a pulse at frequency that the master and client are operating. A type 0 radar pulse with a 1us pulse width and a 1428us PRI is used for the testing.
2. The vector signal generator is adjusted to provide the radar burst (18 pulses) at the level of approximately -61dBm at the antenna port of the master device
3. A trigger is provided from the pulse generator to the DFS monitoring system in order to capture the traffic and the occurrence of the radar pulse.
4. EUT will associate with the master at channel. The file “iperf.exe” specified by the FCC is Streamed from the PC 2 through the master and the client device to the PC 1 and played in full motion video using Media Player Classic Ver. 6.4.8.6 in order to properly load the network for the entire period of the test.
5. When radar burst with a level equal to the DFS Detection Threshold +1dB is generated on the operating channel of the U-NII device. At time T0 the radar waveform generator sends a burst of pulse of the radar waveform at Detection Threshold +1dB.
6. Observe the transmissions of the EUT at the end of the radar Burst on the Operating Channel Measure and record the transmissions from the UUT during the observation time (Channel Move Time). One 15 seconds plot is reported for the Short Pulse Radar Type 0. The plot for the Short Pulse Radar Types start at the end of the radar burst. The Channel Move Time will be calculated based on the zoom In 600ms plot of the Short Pulse Radar Type
7. Measurement of the aggregate duration of the Channel Closed Transmission Time method. With the spectrum analyzer set to zero span tuned to the center frequency of the EUT operating channel at the radar simulated frequency, peak detection, and max hold, the dwell time per bin is given by: Dwell (0.3ms) =S (12000ms) / B (4000); where Dwell is the dwell time per spectrum analyzer sampling bin, S is sweep time and B is the number of spectrum analyzer sampling bins. An upper bound of the aggregate duration of the intermittent control signals of Channel Closing Transmission Time is calculated by: C (ms)= N X Dwell (0.3ms); where C is the Closing Time, N is the number of spectrum analyzer sampling bins (intermittent control signals) showing a U-NII transmission and Dwell is the dwell time per bin.
8. Measurement the EUT for more than 30 minutes following the channel move time to verify that no transmission or beacons occur on this channel.

TEST MODE:

Please refer to the clause 2.2

11.9 RESULT OF CHANNEL MOVE TIME, CHANNEL CLOSING TRANSMISSION TIME AND NON-OCCUPANCY PERIOD FOR CLIENT BEACON TEST

BW/ Channel	Maximum EIRP Power(dBm)	Test Item	Test Result	Limit	Result
80MHz/ 5290MHz	12.4	Channel Move Time	2208.05ms	＜10s	PASS
		Channel Closing Transmission Time	52.00ms	＜260ms	PASS
80MHz/ 5530MHz	12.5	Channel Move Time	1321.45ms	＜10s	PASS
		Channel Closing Transmission Time	56.55ms	＜260ms	PASS

Test data reference attachment.

12. ANTENNA REQUIREMENT

12.1 STANDARD REQUIREMENT

15.203 requirement: For intentional device, according to 15.203: an intentional radiator shall be designed to ensure that no antenna other than that furnished by the responsible party shall be used with the device.

12.2 EUT ANTENNA

The EUT antenna is permanent attached Internal antenna(antenna gain: 2.93dBi). It comply with the standard requirement.