DEWALT®

Instruction Manual
Guide d'utilisation
Manual de instrucciones
Manual de Instruções

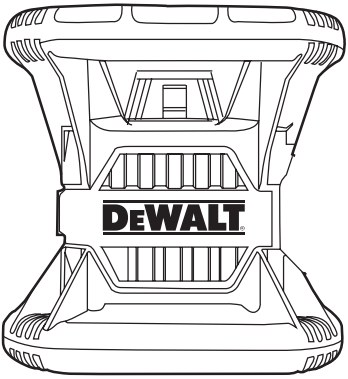

DW080LRS, DW080LGS

Rotary Laser
Laser rotatif
Láser rotativo
Laser Rotativo

www.DEWALT.com

If you have questions or comments, contact us.
Pour toute question ou tout commentaire, nous contacter.
Si tiene dudas o comentarios, contáctenos.
Dúvidas? Visite-nos na Internet em www.DEWALT.com.br

1-800-4-DEWALT

English 8

Français 18

Español 29

Português 41

Ⓐ

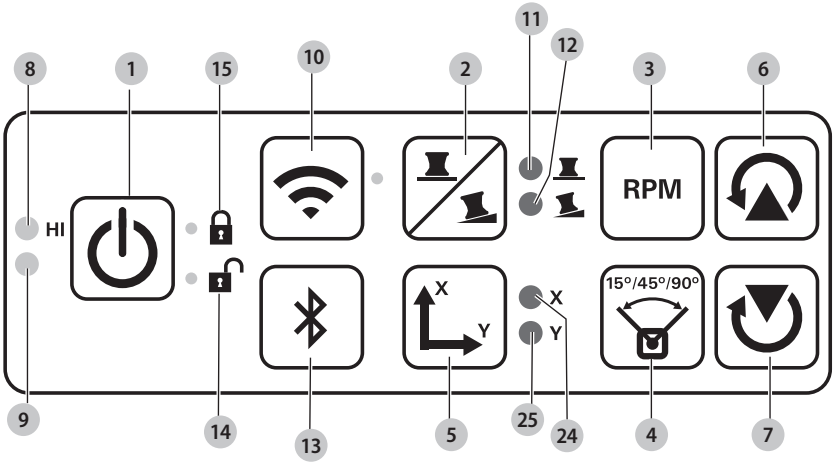
8
1
15
10
2
11
12
3
6
HI
RPM
X
Y
X
Y
15°/45°/90°
9
14
13
5
25
24
4
7

Ⓑ

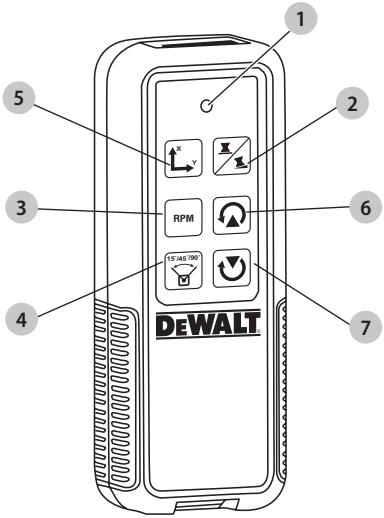
1
5
2
3
6
4
7
RPM
15°/45°/90°
DEWALT

Ⓒ

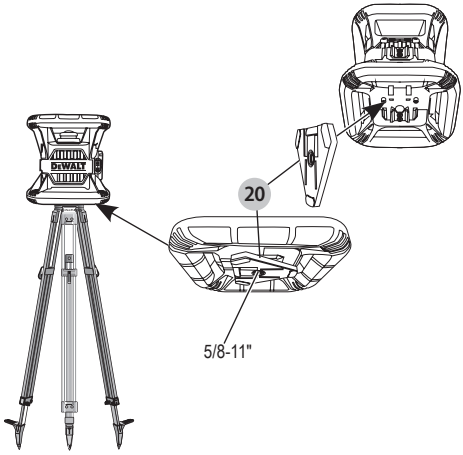

PLUMB MODE/MODE APLOMB /MODALIDAD DE PLOMADA/
MODO NIVELAMENTO VERTICAL

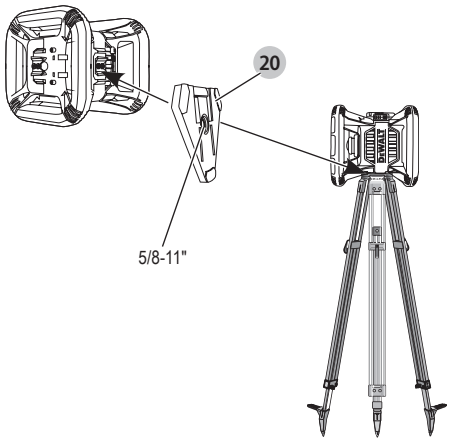

LEVEL MODE/MODE NIVEAU/MODALIDAD DE NIVEL/
MODO DE NIVELAMENTO

Ⓓ

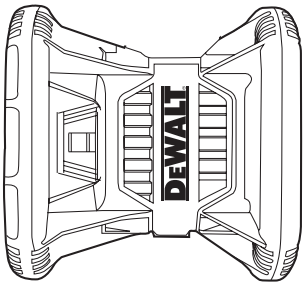

PLUMB MODE
MODE APLOMB
MODALIDAD DE PLOMADAL
MODO NIVELAMENTO VERTICAL

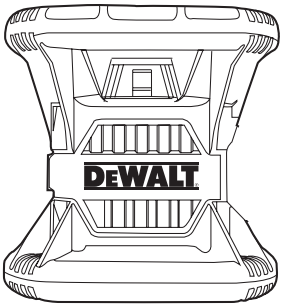

LEVEL MODE
MODE NIVEAU
MODALIDAD DE NIVEL
MODO DE NIVELAMENTO

Ⓔ

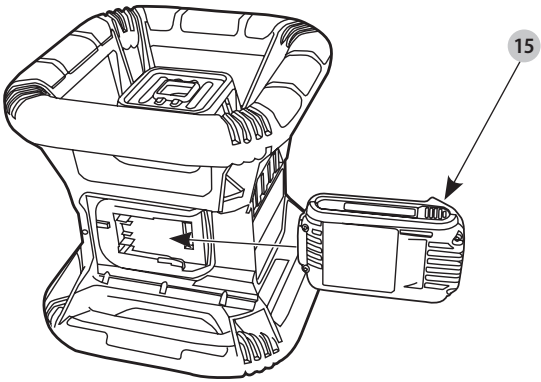

Ⓕ

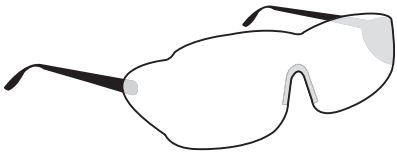

G

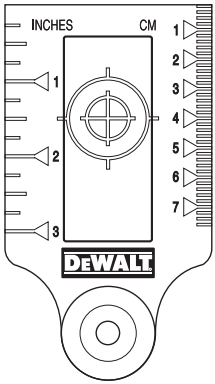

H

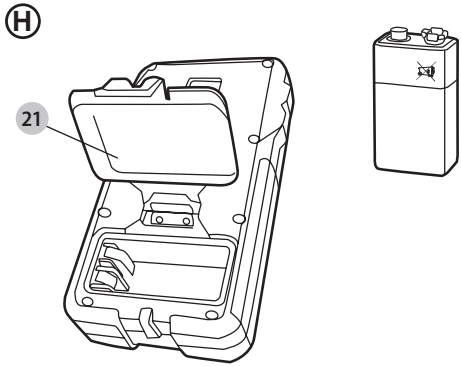

I

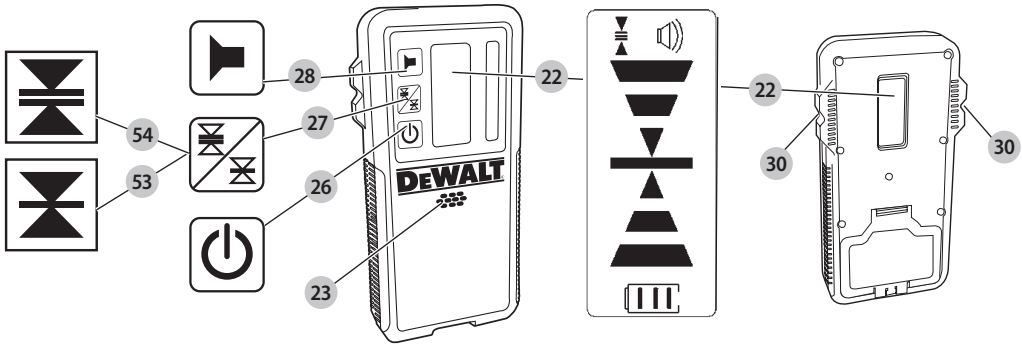

J

INDICATORS/INDICATEURS /INDICADORES/INDICADORES

	Above Grade/ Au-dessus du niveau / Por encima del nivel Acima do grau	Slightly Above Grade/ Légèrement au-dessus du niveau / Ligeramente por encima del nivel/ Ligeiramente acima do grau	On Grade/ Au niveau / En nivel/ Um grau	Slightly below Grade/ Légèrement au-dessous du niveau / Ligeramente por debajo del nive/ Ligeiramente abaixo do graul	Below Grade/ Au-dessous du niveau / Por debajo del nivel/ Abaixo do grau
audible signals/ signal sonore / señales auditivas/ sinais audíveis	fast beep / bip rapide / bip rápido/ Bipe rápido	fast beep / bip rapide / bip rápido/ Bipe rápido	steady tone/ tonalité constante / tono constante/ Tom estável	slow beep/ bip lent / bip lento/ Bipe lento	slow beep/ bip lent / bip lento/ Bipe lento
display icons/ icône affichée / iconos en pantalla/ ícones da tela					

Ⓚ

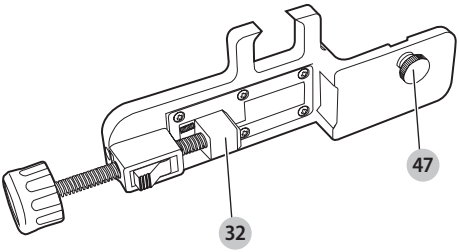
47
32

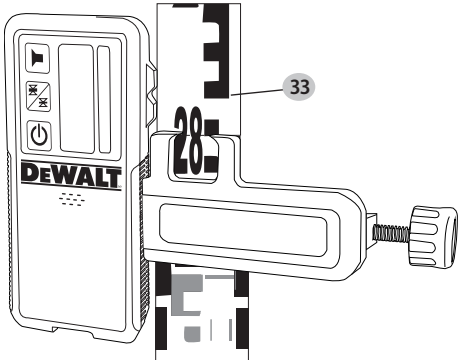
33
DEWALT

Ⓛ

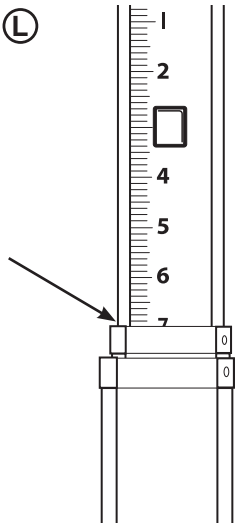
1
2
4
5
6
0
0

Ⓜ

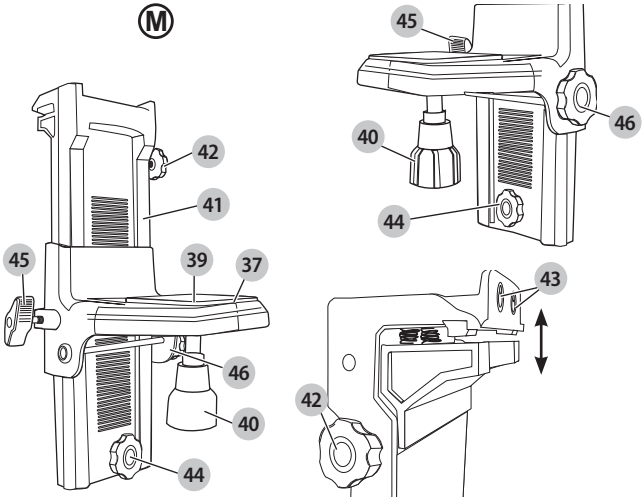
42
41
45
39
37
46
40
44
45
46
40
44
43
42

Ⓝ

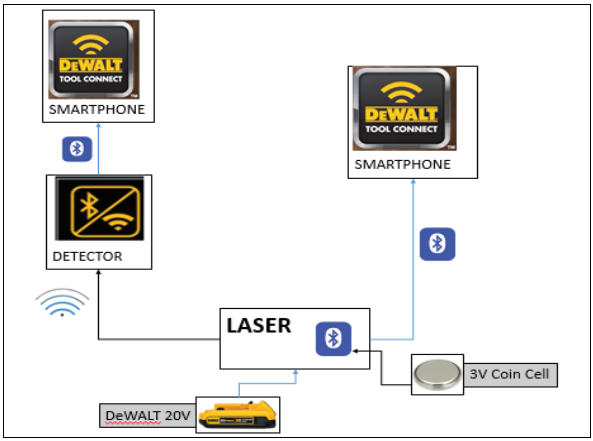
DEWALT TOOL CONNECT
SMARTPHONE
DETECTOR
DEWALT TOOL CONNECT
SMARTPHONE
LASER
3V Coin Cell
DeWALT 20V

Ⓞ

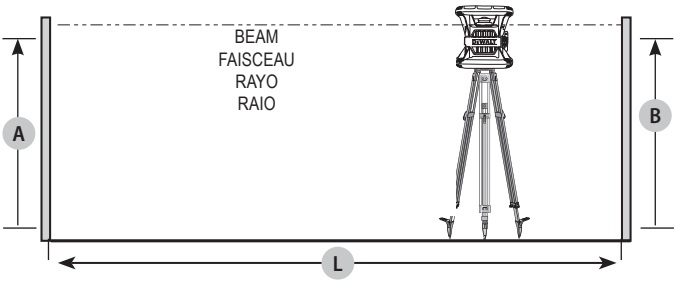

Ⓟ

LASER UNIT ROTATED 180˚
ROTATION DE L'APPAREIL LASER A 180˚
UNIDAD LÁSER ROTADA EN 180º
UNIDADE DE LASER EM ROTAÇÃO DE 180º

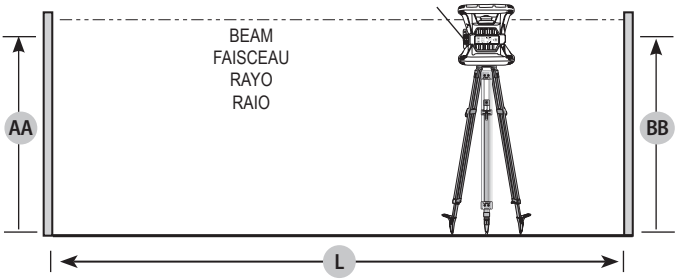

Ⓠ

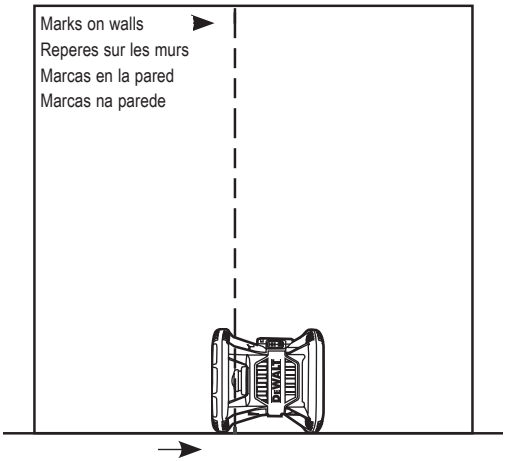

Ⓡ

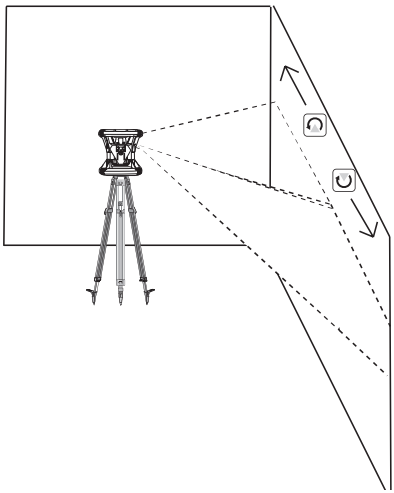

Definitions: Safety Alert Symbols and Words

This instruction manual uses the following safety alert symbols and words to alert you to hazardous situations and your risk of personal injury or property damage.

DANGER: *Indicates an imminently hazardous situation which, if not avoided,* ***will*** *result in* ***death or serious injury.***

WARNING: *Indicates a potentially hazardous situation which, if not avoided,* ***could*** *result in* ***death or serious injury.***

CAUTION: *Indicates a potentially hazardous situation which, if not avoided,* ***may*** *result in* ***minor or moderate injury.***

(Used without word) Indicates a safety related message.

NOTICE: *Indicates a practice* ***not related to personal injury*** *which, if not avoided, may result in* ***property damage.***

If you have any questions or comments about this or any DEWALT tool, call us toll free at: 1-800-4-DEWALT (1-800-433-9258).

Warning: To reduce the risk of injury, user must read instruction manual.

Safety Instructions for Lasers

WARNING! Read and understand all instructions. *Failure to follow all instructions listed below may result in electric shock, fire and/or serious personal injury.*

SAVE ALL WARNINGS AND INSTRUCTIONS FOR FUTURE REFERENCE

WARNING! Laser Radiation Exposure. Do not disassemble or modify the laser level. There are no user serviceable parts inside. Serious eye injury could result.

WARNING: Hazardous Radiation. *Use of controls or adjustments or performance of procedures other than those specified herein may result in hazardous radiation exposure.*

- ***Do not operate the laser in explosive atmospheres, such as in the presence of flammable liquids, gases, or dust.*** *Power tools create sparks which may ignite the dust or fumes.*
- ***Use the laser only with the specifically designated batteries.*** *Use of any other batteries may create a risk of fire.*
- ***Store idle laser out of reach of children and other untrained persons.*** *Lasers are dangerous in the hands of untrained users.*
- ***Use only accessories that are recommended by the manufacturer for your model.*** *Accessories that may be suitable for one laser, may create a risk of injury when used on another laser.*
- ***Tool service must be performed only by qualified repair personnel.*** *Service or maintenance performed by unqualified personnel may result in injury. To locate your nearest DEWALT service center call 1–800–4-DEWALT (1–800–433–9258) or go to http://www.DEWALT.com on the Internet.*
- ***Do not use optical tools such as a telescope or transit to view the laser beam.*** *Serious eye injury could result.*
- ***Do not place the laser in a position which may cause anyone to intentionally or unintentionally stare into the laser beam.*** *Serious eye injury could result.*
- ***Turn the laser off when it is not in use.*** *Leaving the laser on increases the risk of staring into the laser beam.*
- ***Do not position the laser near a reflective surface which may reflect the laser beam toward anyone's eyes.*** *Serious eye injury could result.*
- ***Do not operate the laser around children or allow children to operate the laser.*** *Serious eye injury may result.*
- ***Do not remove or deface warning labels.*** *Removing labels increases the risk of exposure to radiation.*
- ***Position the laser securely on a level surface.*** *Damage to the laser or serious injury could result if the laser falls.*

WARNING: *Use of controls or adjustments or performance of procedures other than those specified herein may result in hazardous radiation exposure.*

WARNING! DO NOT DISASSEMBLE THE ROTARY LASER. There are no user serviceable parts inside. Disassembling the rotary laser will void all warranties on the product. Do not modify the product in any way. Modifying the tool may result in hazardous laser radiation exposure.

- *The label on your tool may include the following symbols.*

V .....volts
mW .....milliwatts
.....laser warning symbol
nm.....wavelength in nanometers
3R.....Class 3R Laser

Warning Labels

For your convenience and safety, the following label is on your laser.

WARNING: To reduce the risk of injury, user must read instruction manual.

WARNING: LASER RADIATION. DO NOT STARE INTO BEAM. Class 3R Laser Product

AVOID EXPOSURE -LASER RADIATION IS EMITTED FROM THIS APERTURE

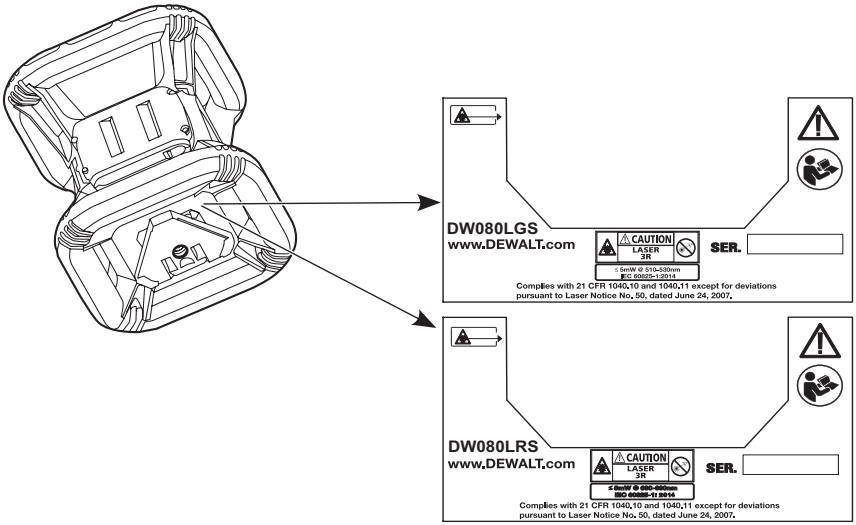

Laser Information

The DW080LRS/LGS Cordless Rotary Laser is a CLASS 3R laser product and complies with 21 CFR 1040.10 and 1040.11 except for deviations pursuant to laser notice No. 50, dated June 24, 2007.

Conforms to UL STDS 61010-1 & 2595

Certified to CSA STD C22.2 No. 61010-1

Complies with IEC 60825-1:2014

These devices comply with Part 15 of the FCC Rules. Operation is subject to the following two conditions: 1) this device may not cause harmful interference, and 2) this device must accept any interference received, including interference that may cause undesired operation.

NOTE: This equipment has been tested and found to comply with the limits for a Class B digital device, pursuant to Part 15 of the FCC Rules. These limits are designed to provide reasonable protection against harmful interference in a residential installation. This equipment generates, uses and can radiate radio frequency energy and, if not installed and used in accordance with the instructions, may cause harmful interference to radio communications. However, there is no guarantee that interference will not occur in a particular installation. If this equipment does cause harmful interference to radio and television reception, which can be determined by turning the equipment off and on, the user is encouraged to try to correct the interference by one or more of the following measures:

- Reorient or relocate the receiving antenna.

- Increase the separation between the equipment and receiver.
- Connect the equipment into an outlet on a circuit differentfrom that which the receiver is connected.
- Consult the dealer or an experienced radio/TV technician for help.

Canada, Industry Canada (IC) Notices

Class B digital circuitry of this device complies with Canadian ICES-003. This device complies with Industry Canada license-exempt RSS standard(s). Operation is subject to the following two conditions: 1) this device may not cause interference, and 2) this device must accept any interference, including interference that may cause undesired operation of the device.

READ ALL INSTRUCTIONS

Batteries and Power

This DEWALT rotary laser will accept all DEWALT 20 volt lithium ion batteries, but is built to best resist damage during a fall when used with the following batteries: All 1.5Ah and 2Ah DEWALT 20 volt lithium ion batteries.

Charging the Battery

The battery pack is not fully charged out of the carton. You need to use a DEWALT 20 volt charger to charge the battery pack before you can use the rotary laser.

- Refer to the chart at the end of this manual for compatibility of chargers and battery packs.
- Be sure to read all safety instructions before using your charger.

WARNING:

- ***DO NOT attempt to charge the battery pack with any chargers other than the ones listed in this manual.*** *The charger and battery pack are specifically designed to work together.*
- *Carefully follow all instructions and warnings on the battery label and package and accompanying* ***Battery Safety Manual****.*

1. Slide the battery pack into the charger as described in the ***Battery Safety Manual***.
2. Wait until the battery pack is **fully charged**.
3. Slide the battery pack out of the track.

NOTE: When ordering replacement battery packs, be sure to include the catalog number and voltage.

Installing the 20V DEWALT Battery Pack

1. Position the fully-charged 20V DEWALT battery pack so the release button (Figure Ⓔ **15**) is facing away from you and to the right.
2. Press and hold down the release button on the battery pack.
3. Slide the battery pack all the way into the track on the side of the laser.
4. Release the button on the battery pack.

Removing the Battery Pack

1. Press and hold the release button on the battery pack.
2. Slide the battery pack out of the track on the laser.
3. Release the button on the battery pack.
4. To recharge the battery pack, insert it into the charger, as described in the ***Battery Safety Manual***.

WARNING: *Batteries can explode or leak, and can cause injury or fire. To reduce this risk, follow the instructions in the* ***Battery Safety Manual****.*

Storing Battery Packs

- The best storage place is one that is cool and dry, and away from direct sunlight and excess heat or cold.
- Long storage will not harm the battery pack or charger. Under proper conditions, they can be stored for 5 years or more.

SAVE THESE INSTRUCTIONS FOR FUTURE USE

User Safety

Personal Safety

- ***Stay alert, watch what you are doing, and use common sense when operating a laser product. Do not use the tool while tired or under the influence of drugs, alcohol, or medication.*** *A moment of inattention while operating laser products may result in serious personal injury.*
- *Use appropriate personal protective equipment, including eye protection when working in a construction environment.*

Tool Use and Care

- ***Do not use the tool if the switch does not turn it on or off.*** *Any tool that cannot be controlled with the switch is dangerous and must be repaired.*
- ***Store idle laser products out of the reach of children and do not allow persons unfamiliar with the laser product or these instructions to operate the laser product.*** *Laser products are dangerous in the hands of untrained users.*
- ***Use only accessories that are recommended by the manufacturer for your model.*** *Accessories that may be suitable for one tool, may become hazardous when used with another tool.*

Caution:
This device complies with Part 15 of the FCC Rules / Industry Canada licence-exempt RSS standard(s). Operation is subject to the following two conditions: (1) this device may not cause harmful interference, and (2) this device must accept any interference received, including interference that may cause undesired operation.
Le présent appareil est conforme aux CNR d'Industrie Canada applicables aux appareils radio exempts de licence. L'exploitation est autorisée aux deux conditions suivantes : (1) l'appareil ne doit pas produire de brouillage, et (2) l'utilisateur de l'appareil doit accepter tout brouillage radioélectrique subi, même si le brouillage est susceptible d'en compromettre le fonctionnement.
Changes or modifications not expressly approved by the party responsible for compliance could void the user's authority to operate the equipment.
This equipment has been tested and found to comply with the limits for a Class B digital device, pursuant to part 15 of the FCC Rules. These limits are designed to provide reasonable protection against harmful interference in a residential installation. This equipment generates uses and can radiate radio frequency energy and, if not installed and used in accordance with the instructions, may cause harmful interference to radio communications. However, there is no guarantee that interference will not occur in a particular installation. If this equipment does cause harmful interference to radio or television reception, which can be determined by turning the equipment off and on, the user is encouraged to try to correct the interference by one or more of the following measures:
—Reorient or relocate the receiving antenna.
—Increase the separation between the equipment and receiver.
—Connect the equipment into an outlet on a circuit different from that to which the receiver is connected.
—Consult the dealer or an experienced radio/TV technician for help.

MPE Reminding
To satisfy FCC / IC RF exposure requirements, a separation distance of 20 cm or more should be maintained between the antenna of this device and persons during device operation.
To ensure compliance, operations at closer than this distance is not recommended.

L'antenne installée doit être située
de facon à ce que la population ne puissey être exposée à une dis tance de moin
de 20 cm. Installer l'antenne de facon à ce que le personnel ne puisse approcher à 20 cm ou moins de la position centrale de l' antenne.
La FCC des éltats-unis stipule que cet appareil doit être en tout temps éloigné d'au
moins 20 cm des personnes pendant son functionnement.

The RBRC® Seal

The RBRC® (Rechargeable Battery Recycling Corporation) Seal on the nickel cadmium, nickel metal hydride or lithium-ion batteries (or battery packs) indicates that the costs to recycle these batteries (or battery packs) at the end of their useful life have already been paid by DEWALT. In some areas, it is illegal to place spent nickel cadmium, nickel metal hydride or lithium-ion batteries in the trash or municipal solid waste stream and the Call 2 Recycle® program provides an environmentally conscious alternative.

Call 2 Recycle, Inc., in cooperation with DEWALT and other battery users, has established the program in the United States and Canada to facilitate the collection of spent nickel cadmium, nickel metal hydride or lithium-ion batteries. Help protect our environment and conserve natural resources by returning the spent nickel cadmium, nickel metal hydride or lithium-ion batteries to an authorized DEWALT service center or to your local retailer for recycling. You may also contact your local recycling center for information on where to drop off the spent battery. RBRC® is a registered trademark of Call 2 Recycle, Inc.

Operation

Operating Tips

- *To extend battery life per charge, turn the laser off when it is not in use.*
- *To ensure the accuracy of your work, check the laser calibration often. Refer to **Calibrating the Laser**.*
- *Before attempting to use the laser, make sure the tool is positioned on a relatively smooth, secure surface.*
- *Always mark the center of the laser line or dot. If you mark different parts of the beam at different times you will introduce error into your measurements.*
- *To increase working distance and accuracy, set up the laser in the middle of your working area.*
- *When attaching to a tripod or wall, mount the laser securely.*
- *When working indoors, a slow rotary head speed will produce a visibly brighter line, a faster rotary head speed will produce a visibly solid line.*
- *To increase beam visibility, wear Laser Enhancement Glasses and/or use a Laser Target Card to help find the beam.*
- *Extreme temperature changes can cause movement or shifting of building structures, metal tripods, equipment, etc., which can effect accuracy. Check your accuracy often while working.*
- *When working with the DEWALT Digital Laser Detector, set the laser's rotation speed to the fastest setting.*
- *If the laser is dropped or has suffers a sharp blow, have the calibration system checked by a qualified service center before using the laser.*

Control Panel (Fig. Ⓐ)

The laser is primarily controlled by the power button 1, the mode button 2, the speed button 3 and the scan mode button 4. These features are then modified when used with either the Axis selection button 5 (DW080LRS/LGS in Slope mode only), or the two direction/elevation adjustment buttons 6 and 7. The direction/elevation adjustment buttons control the rotational direction of the laser head as well as adjust the elevation of the beam when the unit is in slope mode. These buttons can also be used to incrementally rotate the beam when the unit is in Scan mode.

The buttons on the DW080LRS/DW080LGS control panel and the DW080LRS/DW080LGS Remote keypad work the same, unless otherwise indicated.

Power Button

The Power button is used to turn the laser unit on and off.

- To power ON the DW080LRS/LGS laser unit, press the Power button once.
- To completely power OFF the DW080LRS/LGS laser unit, press the power button for 3 sec.

Speed/Rotation Button

The speed button 3 is used to adjust the rotation speed of the laser beam through its 4 preset speeds (150, 300, 600, and 1200 RPM).

Scan Mode Button

The scan mode button 4 is used to make the laser head sweep back and forth, creating a short, bright laser line. This short line is much brighter and more visible than when the unit is in full rotation mode.

Using Scan Mode

- To enter Scan Mode, push and release the scan mode button 4. To cycle through the scan angles, continue to press the button until you reach the desired angle.
- The direction of the scan zone can be controlled with the arrow buttons 6 and 7.

Slope Mode Button

- To activate Slope Mode press the slope mode button 2.
- To return to self-leveling mode and re-engage full self-leveling, press and hold the mode button 2 again.

Setting the Slope Direction

When Slope Mode is activated, the unit automatically engages the X- Axis. This allows you to slope the laser in the direction of the X-Axis, as indicated by the "gunsights" on the rollcage.

The LED light 11 or 12 indicates the current slope direction.

In certain situations, it may be desirable to slope the laser in the Y-axis. The direction of Slope Mode can be changed back and forth between the Y-axis and the X-axis by pressing the X-Y axis button 5. The selected axis is identified by LED light 24 or 25.

Setting the Amount of Slope

1. Turn on Slope Mode.
2. Select the desired axis.
3. Use the Arrow buttons (Fig. Ⓑ, 6 and 7) to tilt the laser rotor head up and down.

Arrow Buttons (Fig. Ⓐ, Ⓡ)

The arrow buttons (Figure Ⓐ 6 and 7) are used for different functions depending on the operating mode of the laser unit.

- In **Self-Leveling Horizontal** Mode**,** the arrow buttons rotate the direction of the laser beam clockwise or counter-clockwise during rotation, or adjust the position of the laser beam clockwise or counter-clockwise during Scan Mode.
- In **Self-Leveling Vertical** Mode, the arrow buttons rotate the direction of the laser beam clockwise or counter-clockwise during rotation, or adjust the position of the laser beam clockwise or counter-clockwise during Scan Mode.
- In **Slope Mode**, the arrow buttons are used to tilt the laser head.

Connection Buttons

The connection buttons (Figure Ⓐ 10 and 13) provide different ways to wirelessly connect to the laser.

- Press the radio waves button (Figure Ⓐ 10) to connect your cell phone to the Detector which is connected to the laser.
- Press the Bluetooth button (Figure Ⓐ 13) to enable Bluetooth on the laser. If the laser is within 100 ft (30 m), you can use the Tool Connect application on your cell phone to control the laser, instead of using the remote. Also, if the laser is dropped, disturbed, etc., it will send messages to the Tool Connect application to inform you.

Using the Tool Connect Application

You can use Bluetooth® capability to pair the laser with the DEWALT® Tool Connect application on your cell phone, and then use your cell phone to control the laser (Figure Ⓝ).

1. From either GET IT ON Google Play or Download on the App Store, download the DEWALT® Tool Connect application to your cell phone.
2. On the laser keypad, press to turn the laser on.
3. On the laser keypad, press to turn on Bluetooth®. (If Bluetooth does not turn on, replace the coin cell battery (3V CR2430) on the bottom of the laser.)
4. Using the DEWALT® Tool Connect application, select the product type (Rotary Laser) and pair your cell phone to the DW080LRS/DW080LGS.

When the laser is on, the DEWALT® Tool Connect application will display information about the laser:

- A laser safety icon to let you know the laser is on.
- The laser's current settings for RPM, Slope, etc.
- If the current settings are one of the "favorite settings" you have saved for the laser, it will display the name of that setting (e.g., Main St - Site 1).
- If the Tracking feature is on, the application will know where the laser is and will let you know if the laser has been taken and is now out-of-range.

Bluetooth

THE BLUETOOTH® WORD MARK AND LOGOS ARE REGISTERED TRADEMARKS OWNED BY BLUETOOTH SIG, INC. AND ANY USE OF SUCH MARKS BY STANLEY TOOLS IS UNDER LICENSE. APPLE AND THE APPLE LOGO ARE TRADEMARKS OF APPLE INC., REGISTERED IN THE U.S. AND OTHER COUNTRIES. APP STORE IS A SERVICE MARK OF APPLE INC., REGISTERED IN THE U.S. AND OTHER COUNTRIES. GOOGLE PLAY AND THE GOOGLE PLAY LOGO ARE TRADEMARKS OF GOOGLE INC.

Turning the Laser On (Fig. Ⓔ, Ⓑ)

1. Insert the fully charged 20V battery pack as shown in Figure Ⓔ.-
2. Gently press the power button to power ON the laser.
   - The power LED indicator light (Figure Ⓐ 9) will illuminate.
   - Self-leveling mode is activated automatically and the laser unit will self-level. Once the laser unit is level, the beam will rotate clockwise once at 600 RPM.
   - After 10 sec., Hi Mode (Anti- Drift) is activated automatically and the Hi LED (Figure Ⓐ 8) will illuminate.
3. Press the speed/rotation button (Figure Ⓐ 3) to adjust the rotation speed. The direction can be changed using buttons 6 and 7.
4. Press the Scan button (Figure Ⓐ 4) to set the laser to scan in 0°, 15°, 45°, or 90° degree mode.

If you turn ON Slope Mode, the Slope LED (Figure Ⓐ 12) will light. If using X-axis leveling, the X-axis LED (Figure Ⓐ 24) will light, or if using Y-axis leveling, the Y-axis LED (Figure Ⓐ 25) will light instead.

Calibrating the Laser (Fig. O, P)

Field calibration checks should be done frequently. This section provides instructions for performing simple field calibration checks of your DEWALT Rotary Laser. Field calibration checks do not calibrate the laser. That is, these checks do not correct errors in the leveling or plumbing capability of the laser. Instead, the checks indicate whether or not the laser is providing a correct level and plumb line. These checks cannot take the place of professional calibration performed by a DEWALT service center.

Level Calibration Check (X-axis)

1. Set up a tripod between two walls that are at least 50 feet apart. The exact location of the tripod is not critical.
2. Mount the laser unit on the tripod so that the X-axis points directly toward one of the walls.
3. Turn the laser unit on and allow it to self-level.
4. Mark and measure points A and B on the walls as shown in Figure O.
5. Turn the entire laser unit 180º so the X-axis points directly toward the opposite wall.
6. Allow the laser unit to self-level, and mark and measure points AA and BB on the walls as shown in Figure P.
7. Calculate the total error using the equation:

   Total Error = (AA – A) – (BB– B)
8. Compare total error to the allowable limits shown in the following table.

Distance between walls	Allowable Error
L = 50 ft. (15.3 m)	1/8" (3 mm)
L = 75 ft. (22.9 m)	3/16" (4.5 mm)
L = 100 ft. (30.5 m)	1/4" (6 mm)

Level Calibration Check (Y-axis)

Repeat the procedure above, but with the laser unit positioned so the Y-axis is pointed directly toward the walls.

Plumb Error Check (Fig. Q)

1. Using a standard plumb bob as a reference, mark the top and bottom of a wall. (Be sure to mark the wall and not the floor and ceiling.)
2. Position the rotary laser securely on the floor approximately 3' (1 m) from the wall.
3. Turn the laser on, and point the dot at the mark on the bottom of the wall. Then, using the up/down arrows on the remote control, rotate the dot upwards. If the center of the dot scans over the mark on the top of the wall, the laser is properly calibrated.

NOTE: This check should be done with a wall no shorter than the tallest wall for which this laser will be used.

Using the Laser on a Tripod (Fig. ©)

1. Position the tripod securely and set it to the desired height.
2. Make sure that the top of the tripod is roughly level. The laser will self-level only if the top of the tripod is within ± 5˚ of level. If the laser is set up too far out of level, it will beep when it reaches the limit of its leveling range. No damage will be done to the laser, but it will not operate in an “out of level” condition.
3. Secure the laser to the tripod by attaching the tripod adapter **20** as shown in Figure © to the laser body. The adapter may be assembled to the bottom for level mode or to the side for plumb mode. Place the assembly on the tripod and screw the threaded knob on the tripod into the female thread on the tripod adapter.

   NOTE: Be sure that the tripod you are working with has a 5/8"–11 threaded screw to ensure secure mounting.
4. Turn the laser on and adjust the rotation speed and controls as desired.

Using the Laser on a Floor (Fig. ®)

The laser level can be positioned directly on the floor for leveling and plumbing applications such as framing walls.

1. Place the laser on a relatively smooth and level surface where it will not be disturbed.
2. Position the laser for a level or plumb setting as shown.
3. Turn the laser on and adjust the rotation speed and controls as desired.

NOTE: The laser will be easier to set up for wall applications if the rotation speed is set to 0 rpm's and if the remote control is used to line up the laser with control marks. The remote allows one person to set up the laser.

Using the DW080LRS/LGS Remote

The remote control allows one person to operate and set up the laser from a distance. The remote is powered by a Li-Ion battery. Use the USB port to charge the battery.

You must press the radio waves button on the laser in order to use the remote.The LED light on the remote control (Figure Ⓑ **1**) indicates a signal is being transmitted from the DW080LRS/LGS laser unit.

NOTE: Whenever Bluetooth® is enabled on the laser, you will NOT be able to use the remote.

Any remote could control the laser unless the laser is paired to one remote.

- If the laser is **not** paired to the remote, the unlocked LED will be lit on the laser keypad to indicate that any remote can control the laser.
- If the laser **is** paired to the remote, the locked LED will be lit to indicate that currently only one remote can control the laser.

You can use all the buttons on the keypad to control the laser unit. To completely power OFF a DW080LRS/LGS laser unit using the Remote keypad, press the X-Y axis button **14** and the MODE button **13** simultaneously.

Specifications

SKU	DW080LRS	DW080LGS
Laser Wavelength	630-680nm	515-530nm 630-680nm
Laser Power/Class	≤ 5mw /CLASS 3R	≤ 5mw /CLASS 3R
Rotation Speed	150, 300, 600, 1200 RPM	150, 300, 600, 1200 RPM
Self-Leveling Range	± 5°	± 5°
Indoor Visibile Range	200' (60 m) diameter	250' (80 m) diameter
Range with Detector	2000' (600 m) diameter	2000' (600 m) diameter
Leveling Accuracy	+/- 1/16" per 100' (+/- 1.5 mm per 30m)	+/- 1/16" per 100' (+/- 1.5 mm per 30m)
Power Source	20V DEWALT batteries	20V DEWALT batteries
Operating Temperature	23°F to 122°F (-5°C to 50°C)	23°F to 122°F (-5°C to 50°C)
Storage Temperature	-4°F to 158°F (-20°C to 70°C)	-4°F to 158°F (-20°C to 70°C)
Environmental	Water resistant	Water resistant

Accessories

Recommended accessories for use with your tool are available for purchase at your factory-owned local service center.

WARNING: Since accessories, other than those offered by DEWALT, have not been tested with this product, use of such accessories with this tool could be hazardous. To reduce the risk of injury, only DEWALT, recommended accessories should be used with this product.

If you need assistance in locating any accessory, please contact DEWALT Industrial Tool Co., 701 East Joppa Road, Towson, MD 21286, call 1–800–4-DEWALT (1–800–433–9258) or visit our website www.DEWALT.com

Digital Laser Detector (Fig. Ⓗ–Ⓚ)

Some laser kits include a DEWALT Digital Laser Detector. The DEWALT Digital Laser Detector allows you to locate a laser beam emitted by a rotary laser in bright light conditions or over long distances. The detector can be used in both indoor and outdoor situations where it is difficult to see the laser beam.

The detector is not for use with non-rotating lasers but is compatible with most rotary red-beam (DW0743R) and green beam (DW0743G) lasers. It can be set to indicate the location of the beam to either the nearest 1/8" (3 mm) or the nearest 1/25" (1 mm). The detector gives both visual signals through the display window 22 and audio signals through the speaker 23 to indicate the location of the laser beam.

The DEWALT Digital Laser Detector can be used with or without the detector clamp. When used with the clamp, the detector can be positioned on a grade rod, leveling pole, stud or post.

Installing a Battery in the Detector (Fig. Ⓗ)

The Digital Laser Detector is powered by a 9 volt battery. To install the battery provided, lift up on the battery compartment cover 21. Place the 9 volt battery in the compartment, aligning the battery as shown.

Detector Controls (Fig. Ⓘ)

The detector is controlled by the power button 26 and the accuracy mode button 27.

When the power button is pushed once, the detector is turned on. The top of the display window shows the accuracy icon 27, and the volume icon 28. To decrease the volume of the audible signal that the detector emits when it senses a laser beam, push the button again; one of the half circles next to the horn icon will dissappear. To turn off the audible signal push the button a third time; the volume icon will dissapear. The DEWALT Digital Laser Detector also has an auto shut-off feature. If a rotary laser beam does not strike the beam detection window, or if no buttons are pressed, the detector will shut itself off in about 30 minutes.

When the detector is on, the top of the window shows an accuracy mode icon. Either the ±1/25" (1 mm) accuracy mode icon 53 will appear, or the ±1/8" (3 mm) accuracy mode icon 54 will appear. When the ±1/25" (1 mm) accuracy mode icon appears, it indicates that the detector will give an "on grade" reading only when the laser beam is on grade or no more than 1/25" (1 mm) above or below it. When the 1/8" (3 mm) accuracy mode icon appears, it indicates that the detector will give an "on grade" reading when the laser beam is on grade or approximately 1/8" (3 mm) above or below it. Push the accuracy mode button 27 once to change the accuracy mode.

Detector Operation (Fig. Ⓘ, Ⓙ)

1. Set up and position the rotary laser that you will be using according to the manufacturer's directions. Turn the laser on and make sure that the laser is rotating and emitting a laser beam. **NOTE:** This detector has been designed to be used only with a rotating laser. The detector will not work with a stationary beam laser level.
2. Turn the detector on by pressing the power/volume button 26.
3. Adjust the volume as desired as described in the ***Detector Controls***.
4. Position the detector so that the detector window 22 is facing the laser beam produced by the rotary laser. Move the detector up or down within the approximate area of the beam, until you have centered the detector. For information about the display window indicators and the audible signal indicators, refer to the table titled Indicators (Fig. Ⓙ).
5. Use the marking notches 30 to accurately mark the position of the laser beam.

Detector Cleaning and Storage

- Dirt and grease may be removed from the exterior of the detector using a cloth or soft, non-metallic brush.
- The DEWALT Digital Laser Detector is waterproof. If you should drop the detector in mud, wet concrete, or a similar substance, simply hose the detector off. Do not use high pressure water, e.g., from a pressure washer.
- The best storage place is one that is cool and dry–away from direct sunlight and excess heat or cold.

Detector Service

Except for batteries, there are no user serviceable parts in the Digital Laser Detector. Do not disassemble the unit. Unauthorized tampering with the laser detector will void all warranties.

Detector Troubleshooting

The detector will not turn on.

- Press and release the power/volume button.
- Check to see that the battery is in place and in the proper position.
- If the detector is very cold, allow it to warm up in a heated area.
- Replace the 9 volt battery. Turn the unit on.
- If the detector still does not turn on, take the detector to a DEWALT service center.

The detector's speaker makes no sound.

- Ensure that the detector is on.
- Press the power/volume button. It will toggle from high, to low, to mute.
- Ensure that the rotary laser is spinning and that it is emitting a laser beam.
- If the detector is still not making any sound, take it to a DEWALT service center.

The detector does not respond to a stationary laser beam.

The DEWALT Digital Laser Detector has been designed to work only with rotary lasers.

The detector gives off a tone but the LCD display window does not function.

- If the detector is very cold, allow it to warm up in a heated area.
- If the LCD display window is still not functioning, take the detector to a DEWALT service center.

Mounting Bracket (Fig. Ⓒ, Ⓜ)

Some laser kits include a Wall Mount. It can be used for attaching the tool to track or ceiling angle and to aid in acoustical ceiling installation. Follow the directions below for using the wall mount.

CAUTION: *Before attaching the laser level to wall track or ceiling angle, be sure that the track or angle is properly secured.*

1. Place the laser on the mounting base 37 aligning the 5/8–11 screw hole on the tripod adapter (20, Fig. Ⓒ) attached to the bottom of the laser with the hole 39 in the mounting base. Turn the mounting knob 40 to secure the laser.
2. With the wall mount measuring scale 41 facing you, loosen the wall mount clamp locking knob 42 to open the clamp jaws.
3. Position the clamp jaws around the wall track or ceiling angle and tighten the wall mount clamp locking knob 42 to close the clamp jaws onto the track. Be sure that the wall mount clamp locking knob is securely tightened before proceeding.

CAUTION: *Always use a ceiling wire hanger or equivalent material, in addition to the wall mount clamp locking knob, to help secure the laser level while mounting it to a wall. Thread the wire through the handle of the laser level. DO NOT thread the wire through the protective metal cage. Additionally, screws may be used to fasten the wall mount directly to the wall as a back up. Screw holes 43 are located at the top of the wall mount.*

4. Using the base leveling knob 44 approximate a level position from the wall.
5. The tool can be adjusted up and down to the desired offset height for working. To change the height, loosen the locking knob 45 located on the left of the wall mount. Support the mounting base when adjusting the height.
6. Turn the adjustment knob 46, located to the right of the wall mount, to move the laser level up and down to set your height. Use the wall mount measuring scale 41 to pinpoint your mark.
   NOTE: It may be helpful to turn the power on and turn the rotary head so that it puts a dot on one of the laser scales. The DEWALT target card is marked at 1–1/2" (38 mm), therefore, it may be easiest to set the offset of the laser to 1–1/2" (38 mm) below the track.
7. Once you have positioned the laser at the desired height, tighten the locking knob 45 to maintain this position.

Mounting on a Grade Rod (Fig.Ⓚ)

To secure your detector to a grade rod, first attach the detector to the clamp using the 1/4"-20 threaded knob 47 on the back of the clamp. Slide the tracks 32 on the clamp around the rail 33 on the grade rod.

1. Position the detector at the height needed and turn the clamp knob clockwise to tighten the jaws of the clamp around the grade securing the clamp on the rod.
2. To make adjustments in height, slightly loosen the clamp, reposition and retighten.

Construction Grade Rod (Fig. Ⓛ)

DANGER: NEVER *attempt to use a grade rod in a storm or near overhanging electric wires. Death or serious personal injury will occur.*

Some laser kits include a grade rod. The DEWALT Grade Rod is marked with measurement scales on both sides and is constructed in telescoping sections. A spring-loaded button actuates a lock to hold the grade rod at various lengths.

The front of the grade rod has the measurement scale starting at the bottom. Use this for measuring from the ground up when grading or leveling jobs.

The back of the grade rod is designed to measure the height of ceilings, joists, etc. Fully extend the top section of the grade rod until the button locks into the previous section. Extend that section either until it locks into the adjacent section or until the grade rod touches the ceiling or joist. The height is read where the last extended section exits the previous lower section, as shown in Figure Ⓛ.

Target Card (Fig. Ⓖ)

Some laser kits include a Laser Target Card to aid in locating and marking the laser beam. The target card enhances the visibility of the laser beam as the beam crosses over the card. The card is marked with standard and metric scales. The laser beam passes through the red plastic and reflects off of the reflective tape on the reverse side. The magnet at the top of the card is designed to hold the target card to ceiling track or steel studs to determine plumb and level positions. For best performance when using the Target Card, the DEWALT logo should be facing you.

Laser Enhancement Glasses (Fig. Ⓕ)

Some laser kits include a pair of Laser Enhancement Glasses. These glasses improve the visibility of the laser beam under bright light conditions or over long distances when the laser is used for interior applications. These glasses are not required to operate the laser.

CAUTION: *These glasses are not ANSI approved safety glasses and should not be worn while operating other tools. These glasses do not keep the laser beam from entering your eyes.*

DANGER: *To reduce the risk of serious personal injury, never stare directly into the laser beam, with or without these glasses.*

Maintenance

- Under some conditions, the glass lens may collect some dirt or debris. This will affect beam quality and operating range. The lens should be cleaned with a cotton swab moistened with water.
- The flexible rubber shield can be cleaned with a wet lint-free cloth such as a cotton cloth. USE WATER ONLY — DO NOT use cleansers or solvents. Allow the unit to air dry before storing.
- To maintain the accuracy of your work, check the calibration of the laser often. Refer to ***Calibrating the Laser***.
- Calibration checks and other maintenance repairs can be performed by DEWALT service centers. Two free calibration checks are included under the DEWALT One Year Free Service Contract.
- When the laser is not in use, store it in the kit box provided.
- Do not store your laser in the kit box if the laser is wet. Dry exterior parts with a soft, dry cloth and allow the laser to air dry.
- Do not store your laser at temperatures below 0˚F (-18˚C) or above 105˚F (41˚C).

WARNING: *Never use solvents or other harsh chemicals for cleaning the non-metallic parts of the tool. These chemicals may weaken the materials used in these parts. Use a cloth dampened only with water and mild soap. Never let any liquid get inside the unit; never immerse any part of the unit into a liquid. Never use compressed air to clean the laser.*

Troubleshooting

Height of Instrument Alert

The DW080LRS/DW08LGS has a built-in alarm feature that alerts the operator if the unit is disturbed after the unit has self-leveled. The laser unit will stop rotating, the control panel LED indicator light will flash, and the beeper will sound.

Turning the Laser Off

Press the the power button for 3 sec to turn the laser off. The power LED indicator light will no longer be illuminated.

To Reset The Laser Unit for Continued Use

Turn the unit off and back on again using the power button on the laser unit control panel.

NOTE: Always recheck the laser setup after the **Height of Instrument Alert** (Hi mode) has triggered.

Service and Repairs

NOTE: Disassembling the laser level will void all warranties on the product.

To assure product SAFETY and RELIABILITY, repairs, maintenance and adjustment should be performed by authorized service centers. Service or maintenance performed by unqualified personnel may result in a risk of injury. To locate your nearest DEWALT service center call 1–800–4-DEWALT (1–800–433–9258) or visit our website: www.DEWALT.com.

Register Online

Thank you for your purchase. Register your product now for:

- **WARRANTY SERVICE:** Registering your product will help you obtain more efficient warranty service in case there is a problem with your product.
- **CONFIRMATION OF OWNERSHIP:** In case of an insurance loss, such as fire, flood or theft, your registration of ownership will serve as your proof of purchase.
- **FOR YOUR SAFETY:** Registering your product will allow us to contact you in the unlikely event a safety notification is required under the Federal Consumer Safety Act.

Register online at www.dewalt.com/register.

Three Year Limited Warranty

DEWALT will repair, without charge, any defects due to faulty materials or workmanship for three years from the date of purchase. This warranty does not cover part failure due to normal wear or tool abuse. For further detail of warranty coverage and warranty repair information, visit www.DEWALT.com or call 1–800–4-DEWALT (1–800–433–9258). This warranty does not apply to accessories or damage caused where repairs have been made or attempted by others. This warranty gives you specific legal rights and you may have other rights which vary in certain states or provinces.

In addition to the warranty, DEWALT tools are covered by our:

1 YEAR FREE SERVICE

DEWALT will maintain the tool and replace worn parts caused by normal use, for free, any time during the first year after purchase.

90 DAY MONEY BACK GUARANTEE

If you are not completely satisfied with the performance of your DEWALT Power Tool, Laser, or Nailer for any reason, you can return it within 90 days from the date of purchase with a receipt for a full refund – no questions asked.

RECONDITIONED PRODUCT: Reconditioned product is covered under the 1 Year Free Service Warranty. The 90 Day Money Back Guarantee and the Three Year Limited Warranty do not apply to reconditioned product.

FREE WARNING LABEL REPLACEMENT: If your warning labels become illegible or are missing, call 1–800–4-DEWALT or visit your local service center for a free replacement.

DEWALT BATTERY AND CHARGER SYSTEMS/ SYSTÈMES DE BATTERIES ET DE CHARGEURS DEWALT /BATERÍA Y SISTEMAS DE CARGADORES DEWALT/BATERIA E SISTEMAS DE CARREGADOR DEWALT

Chargers/Charge Time (Minutes)
Chargeurs/Temps de chargement (minutes)
Cargadores/tiempo de carga (minutos)
Carregadores/tempo de carga (minutos)

Battery Cat / Nº de cat. batterie /N.° de catálogo de la batería/Nº de Categoria da Bateria	Output Voltage/ Tension de sortie /Tensión de salida/ Tensão de saída	120 Volts														12 Volts	
		DC9000	DC9310	DC9320	DCB095	DCB101	DCB102	DCB103	DCB107	DCB112	DCB113	DCB114	DCB115	DCB118	DCB132	DCB119	DW0249
DCB606	60/20	X	X	X	X	100	100	100	272	170	140	X	90	60	90	X	X
DCB200	20	X	X	X	X	60	60	60	140	90	67	X	45	45/30**	45	90	X
DCB201	20	X	X	X	X	30	30	30	70	45	35	X	22	22	22	45	X
DCB203	20	X	X	X	X	35	35	35	90	60	45	X	30	30	30	60	X
DCB203BT*	20	X	X	X	X	35	35	35	90	60	45	X	30	30	30	60	X
DCB204	20	X	X	X	X	70	70	70	185	120	90	X	60	60/40**	60	120	X
DCB204BT*	20	X	X	X	X	70	70	70	185	120	90	X	60	60	60	120	X
DCB205	20	X	X	X	X	95	95	95	240	150	112	X	75	75/47**	75	150	X
DCB207	20	X	X	X	X	30	30	30	60	40	30	X	22	22	22	X	X

*BT - Bluetooth® **NOTE:** The Bluetooth® word mark and logos are registered trademarks owned by the Bluetooth®, SIG, Inc. and any use of such marks by DEWALT is under license. Other trademarks and trade names are those of their respective owners.

**Battery Datecode 201536 or later.

*BT - Bluetooth[MD] **REMARQUE :** Bluetooth[MD] et ses logos sont des marques déposées de BluetoothMD SIG, Inc. et sont utilisées sous licence par DEWALT. Les autres marques de commerce et les appellations commerciales appartiennent à leurs propriétaires respectifs.

**Code-date de batterie 201536 ou ultérieur.

*BT - Bluetooth® **NOTA:** La marca denominativa y los logotipos de Bluetooth® son marcas registradas propiedad de Bluetooth®, SIG, Inc. y todo uso de dichas marcas por DEWALT se hace bajo licencia. Otras marca y nombres comerciales son de sus respectivos propietarios.

** Código de fecha de la batería 201536 o posterior.

*BT - Bluetooth® **OBSERVAÇÃO:** A marca nominativa e os logotipos Bluetooth® são marcas registradas da Bluetooth® SIG Inc. e quaisquer usos dessas marcas pela DEWALT são feitos sob licença. Outras marcas registradas ou comerciais pertencem aos respectivos proprietários.

**Bateria com código de data 201536 ou posterior.

"X" Indicates that the battery pack is not compatible with that specific charger. All charge times are approximate. Actual charge time may vary. Read the instruction manual for more specific information.

Le « X » indique que le bloc batterie n'est pas compatible avec ce chargeur spécifique. Tous les temps de chargement sont approximatifs. Le temps de chargement réel peut varier. Lisez le mode d'emploi pour plus d'informations spécifiques.

La "X" indica que el paquete de baterías no es compatible con ese cargador específico. Todos los tiempos de carga son aproximados. El tiempo de carga real puede variar. Lea el manual de instrucciones para obtener información más específica.

"X" Indica que o pack de baterias não está compatível ao carregador específico. Todos os tempos de carregamento são estimativas. O tempo de carregamento real pode variar. Leia o Manual de Instruções para mais informações específicas.

**** Maximum initial battery voltage (measured without a workload) is 20 volts. Nominal voltage is 18.*

**** La tension initiale maximale de la batterie (mesurée sans charge) est de 20 volts. La tension nominale est de 18 volts.*

**** La tensión inicial máxima de la batería (medida sin una carga de trabajo) es de 20 voltios. La tensión nominal es de 18.*

**** A tensão inicial máxima da bateria (medida sem carga) é de 20 volts. A tensão nominal é 18.*

Solamente para propósito de Argentina:
Importado por: Black & Decker Argentina S.A.
Pacheco Trade Center
Colectora Este de Ruta Panamericana
Km. 32.0 El Talar de Pacheco
Partido de Tigre
Buenos Aires (B1618FBQ)
República de Argentina
No. de Importador: 1146/66
Tel. (011) 4726-4400

Solamente para propósito de Colombia:
Importado por: Black & Decker de Colombia S.A.S
Cra 85D #46A-65 Bodega 23
Complejo Logístico San Cayetano
Tel. (57) 1-744 – 71 - 00
Bogotá
Colombia

Solamente para propósito de México:
Importado por: Black & Decker S.A. de C.V.
Avenida Antonio Dovali Jaime, # 70 Torre B Piso 9
Colonia Santa Fé
Delegación Alvaro Obregón
México D. F.: 01210
Tel. (52) 555-326-7100
R.F.C.: BDE810626-1W7

Imported by/Importado por:
Black & Decker do Brasil Ltda.
Rod. BR 050, s/n° - Km 167
Dist. Industrial II
Uberaba – MG – Cep: 38064-750
CNPJ: 53.296.273/0001-91
Insc. Est.: 701.948.711.00-98
S.A.C.: 0800-703-4644

Made in China
Hecho en China
Fabricado no China

DEWALT Industrial Tool Co., 701 East Joppa Road, Towson, MD 21286
(MARCH 2018) Part No. Nxxxxxx DW08**0**LRS, DW08**0**LGS Copyright © 2018 DEWALT
The following are trademarks for one or more DEWALT power tools: the yellow and black color scheme, the "D" shaped air intake grill, the array of pyramids on the handgrip, the kit box configuration, and the array of lozenge-shaped humps on the surface of the tool.