Charge-It Solution Kit

User Manual Software

R19US0003ED0101
Rev. 1.01
Dec. 15th, 2017

Introduction

The focus of this document is to illustrate the software related parts of the Charge-It solution kit. It describes both the usage of the kit and the details of software implementation on the various micro controllers on the boards.

Please note that this kit is NOT intended for the general public, but should only be used by persons being familiar with electronic devices and being aware of general risks.

Target Device

The target device this document is created for is the wireless charging BLE kit "Charge-It". Its main parts described hereafter are

- RY7011A (RL78/G1D) – Bluetooth Low Energy module (chip)
- RL78/G1C - USB controller
- RL78/G14 – I2C converter
- RAA458100 – Tx Chip
- RAA457100 – Rx Chip

Development environment

IDE: IAR Embedded Workbench
Compiler IAR V2.21

Related documents

Document Name	Document no.
Charge-It Solution Kit	
User Manual Hardware	R19UH0104E
Quick Start Guide	R19QS0001E
Heart Rate Module	
User Manual Hardware	R01AN3337E
Quick Start Guide	R01AN3338E
Wireless charging	
Wireless Charging Solution Evaluation Kit	R19AN0043E
Low Power Wireless Charging System Configuration and Function	R19AN0041E
Bluetooth Low Energy Protocol Stack	
User's Manual	R01UW0095E
API Reference Manual: Basics	R01UW0088E

Contents

1. Overview 4
2. Architecture 4
2.1 Host Adapter 5
2.1.1 USB Controller 5
2.1.2 I2C Converter 5
2.2 Bluetooth Module 5
2.3 Heart Rate Module 5
3. User manual 6
3.1 Charging 6
3.2 BLE Operation 6
4. Implementation Details 7
4.1 Software Architecture 7
4.1.1 Sensors 7
4.1.2 Heart rate monitor 8
4.1.3 Pedometer 8
4.1.4 Health Thermometer 9
4.1.5 Charging Monitor 9
4.2 File Composition 10
4.3 BLE Profiles 12
4.3.1 Device Information Service 12
4.3.2 Health Thermometer Profile 13
4.3.3 Heart Rate Profile 14
4.3.4 Running Speed and Cadence Profile 15
4.3.5 Custom Profile 16
4.4 Advertising 17
4.5 Connection 18
4.6 Pairing 18
5. Android Application 19
5.1 Installation 19
5.2 Overview 19
5.3 Sensors 20
5.4 Heart Rate 21
5.5 Pedometer 22
5.6 Health Thermometer 23
6. RWCE PC Tool for charging control 24

6.1 System Requirements 24
6.2 Driver Installation 24
6.3 Installation Guide 24
6.4 Startup procedure (1) for ATPC Mode (AT4) 25
6.4.1 Set up of evaluation board 25
6.4.2 Startup evaluation tool 25
6.4.3 Wireless charging start / stop procedure 26
6.5 Startup procedure (2) for ATPC Mode (AT1) 28
6.5.1 Writing method to EEPROM in TX board 28
6.5.2 Set up of evaluation board 28
6.5.3 Startup procedure of EEPROM Write/Read tool 28
6.6 Startup procedure (3) for MCU Control Mode (MC1) 31
6.6.1 Connection of evaluation board 31
6.6.2 Preparation 31
6.6.3 Wireless charging start / stop procedure in MC1 32
6.7 Option Settings 34
6.7.1 Setting of RX IC 34

7. Regulatory Notice 37

Website and Support 39

Revision History 1

General Precautions in the Handling of Microprocessing Unit and Microcontroller Unit Products 2

1. Overview

This solution kit has been developed to demonstrate the combination of the Renesas wireless charging solution with the chips RAA458100 (Tx) and RAA457100 (Rx) together with the Bluetooth Low Energy MCU RL78/G1D.

The kit consists of two boards, the Tx and the smaller Rx board. The boards are mounted together to retain the optimal charging position. The Rx board can be used separately from the Tx board as long as the battery is full enough.

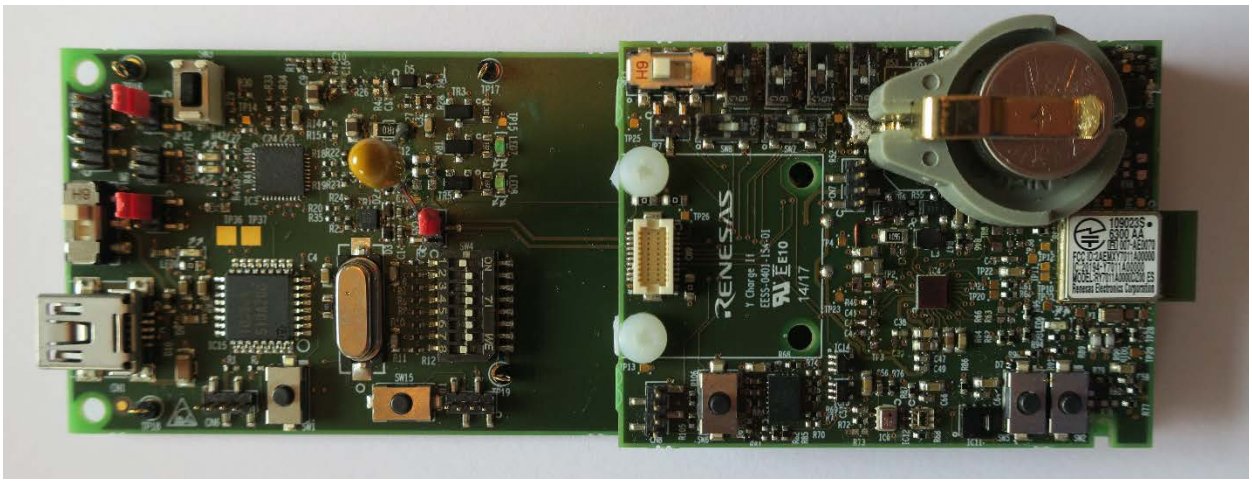

Figure 1 Wireless Charging Solution Kit

2. Architecture

Figure 2 shows the block diagram of Tx board of the wireless charging solution kit.

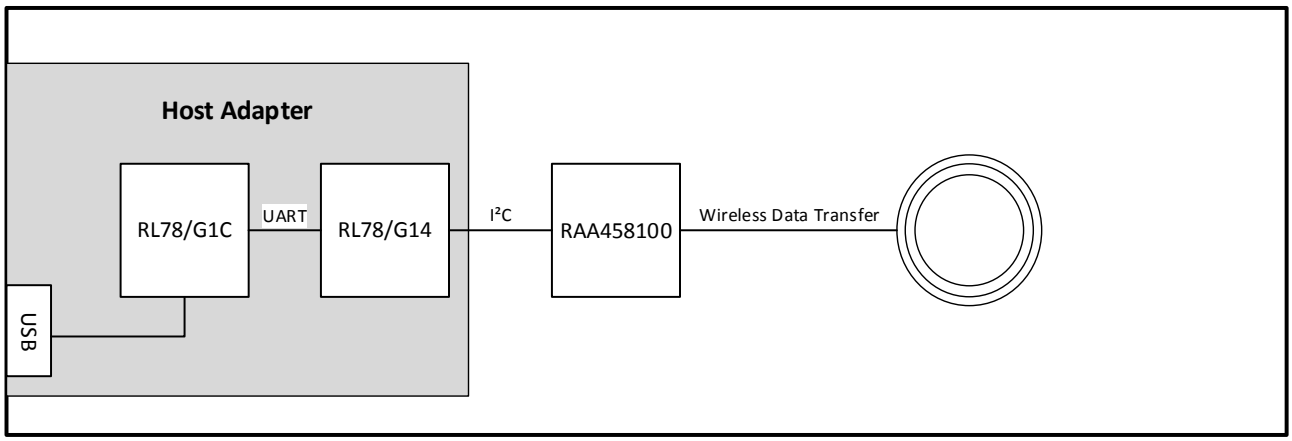

Figure 2 TX Board Block Diagram

Figure 3 shows the block diagram of Tx board of the wireless charging solution kit.

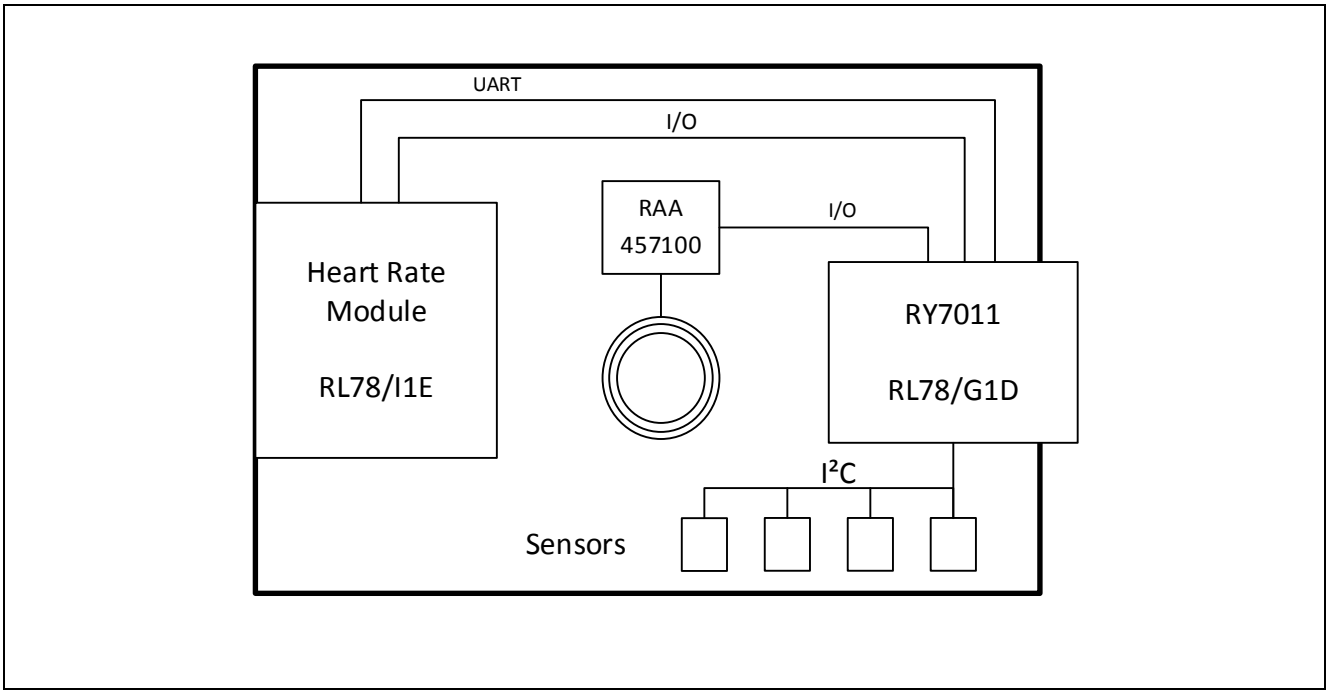

Figure 3 RX Board Block Diagram

2.1 Host Adapter

The Tx board has an integrated host adapter. It consists of USB controller and I²C converter and replaces the RTK0EF0029Z00001BJ host adapter. The firmware of the enclosed MCUs is identical with the original host adapter firmware.

2.1.1 USB Controller

The RL78/G1C is the USB controller on the Tx Board. It converts the USB serial data from the PC into raw serial data and vice versa. The USB interface allows the RWCE PC GUI tool to communicate with the Tx chip RAA458100. To access this chip a dedicated USB driver is needed. For details please read chapter 6.

2.1.2 I2C Converter

The RL78/G14 converts the serial data stream into I²C packages that can be processed by the RAA458100 chip.

2.2 Bluetooth Module

The RL78/G1D is the central MCU on the RX board. It owns the Bluetooth Low Energy stack and collects the data from the sensors and the heart rate module. The firmware is described in detail in chapter 4.

2.3 Heart Rate Module

The optional Heart Rate Module is the sensor board of the Pulse Meter Evaluation Kit described in R01AN3337EJ0100. It can be attached easily and notifies the Bluetooth module via UART when new pulse data values are available. To start the measurement a short impulse on the I/O line needs to be triggered. The communication protocol is described in R01AN3338EJ0120.

3. User manual

3.1 Charging

The boards are configured by default to ATPC/AT1 mode. That means that the charging parameters are read from the integrated EEPROM memory and the Rx chip will take care about the charging progress.

The battery on the Rx board can be charged when you follow these instructions:

- In case you disassembled RX from TX board, then re-assemble it.
- Have RX board switched ON (SW13).
- Connect USB cable to TX board CN1 from a power supply, PC or Laptop.
- Switch On the TX Board (SW14).
- LED1 on TX board indicates by flashing start of wireless communication with RX Board.
- Continuous lighting of LED1 indicates trickle charge / quick charge.

After the battery is fully charged, LED1 on TX board will turn off.

For further information on charging please read the Charge-It Quick Start Guide R19QS0001ED0100 and the User Manual HW R19UH0104ED0100.

The Wireless Charging Solution Kit offers a PC GUI tool that can be connected to the Tx board and Rx board. With this tool (RWCE_Tool) all relevant charging parameters can be setup to customer needs. For more information on this please read chapter 6.

3.2 BLE Operation

After powering the Rx Board by switching SW13 to the “On” position the BLE module starts to send out advertising packets until the device is connected.

The Rx board with the integrated sensors is intended to be used together with the Android Smartphone app “Charge-It”. For installation and usage of this app please read chapter 5.1.

4. Implementation Details

This section describes the implementation details of the RL78/G1D firmware that is running the BLE module RY7011.

4.1 Software Architecture

Figure 4 shows the software architecture of the application.

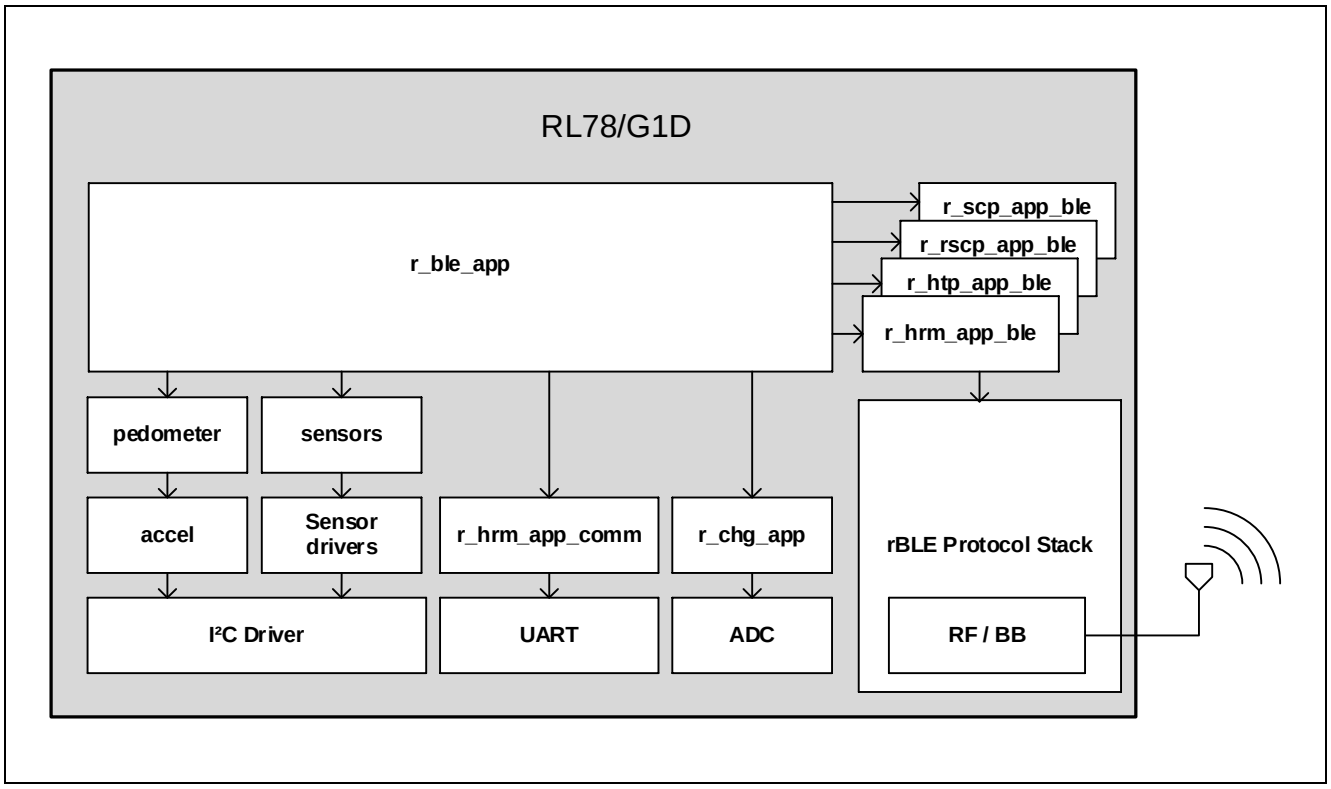

Figure 4: Software architecture

4.1.1 Sensors

The sensors.c module is the central sensor processing unit. It controls the 5 sub sensor entities

- LIGHT
- PRESSURE (and ambient temperature)
- HUMIDITY
- TEMPERATURE (IR sensor)
- BATTERY VOLTAGE

After successful initialization the sensor values are collected by sensors_handler(). This hander is scheduled permanently from the main loop. In case of a hardware defect the initialization function sensors_init() returns an error. In this case the software stops the operation and remains in an error loop. The errors is visualized by a high-frequent blinking of LED6.

After the BLE connection is established a RWKE timer is started with period 300ms period. Each timeout all sensors are triggered sequentially.

Light, pressure, ambient temperature, humidity and battery voltage values are stored in global accessible variables and will be used as input for the BLE custom profile. For details please read chapter 4.3.5.

The BLE interface is handled by the module r_scp_app_ble.c. The sensor values are transferred to the BLE API each second.

4.1.2 Heart rate monitor

The optional heart rate module is working self-sufficient. It is equipped with a RL78/I1E MCU which is connected to the BLE Module by serial interface (UART) and one I/O line. The measurement is started when a short high-level impulse is send out to the Heart rate module on the P0.0 line. This is performed each time SW2 is pressed. The measurement is active when the green LEDs on the HRM module are flickering.

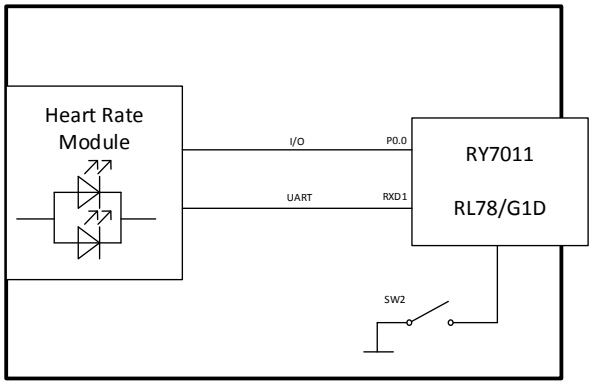

Figure 5: Hear Rate Monitor Module

The measurement is done as long as the finger is placed upon the sensor. It is stopped a while after removing the finger. The measurement values are transmitted via UART interface the BLE module. The communication protocol is described in detail in R013338EJ0120. Figure 5 shows the interconnection between Heart rate module and Bluetooth module.

The BLE interface is handled by the module r_hrm_app_ble.c. The sensor values are transferred to the BLE API each second.

4.1.3 Pedometer

The pedometer utilizes the acceleration part of the digital 9-axis sensor BMX055 from Bosch Sensortec. The pedometer.c module calculates steps, distance and cadence. Accel.c is the high-level driver of the sensor chip.

The BLE interface is handled by the module r_rscp_app_ble.c. The sensor values are transferred to the BLE API each second. In addition to that the total number of steps is also transferred in the data array of the custom profile.

4.1.4 Health Thermometer

The health thermometer BLE service transmits the temperature values of the infrared thermopile sensor TMP007 from Texas Instruments. The temperature values are retrieved within the sensors_handler() routine in sensors.c. The BLE interface is handled by the module r_htp_app_ble.c. The sensor values are transferred to the BLE API each second.

4.1.5 Charging Monitor

The charging monitor is implemented in module r_chg_app.c. It has two parts. The first is the monitoring of the status lines of the wireless charging RX chip. The second part is the battery voltage measurements. This one is implemented using a 1:1 voltage divider and an ADC input of the RL78/G1D.

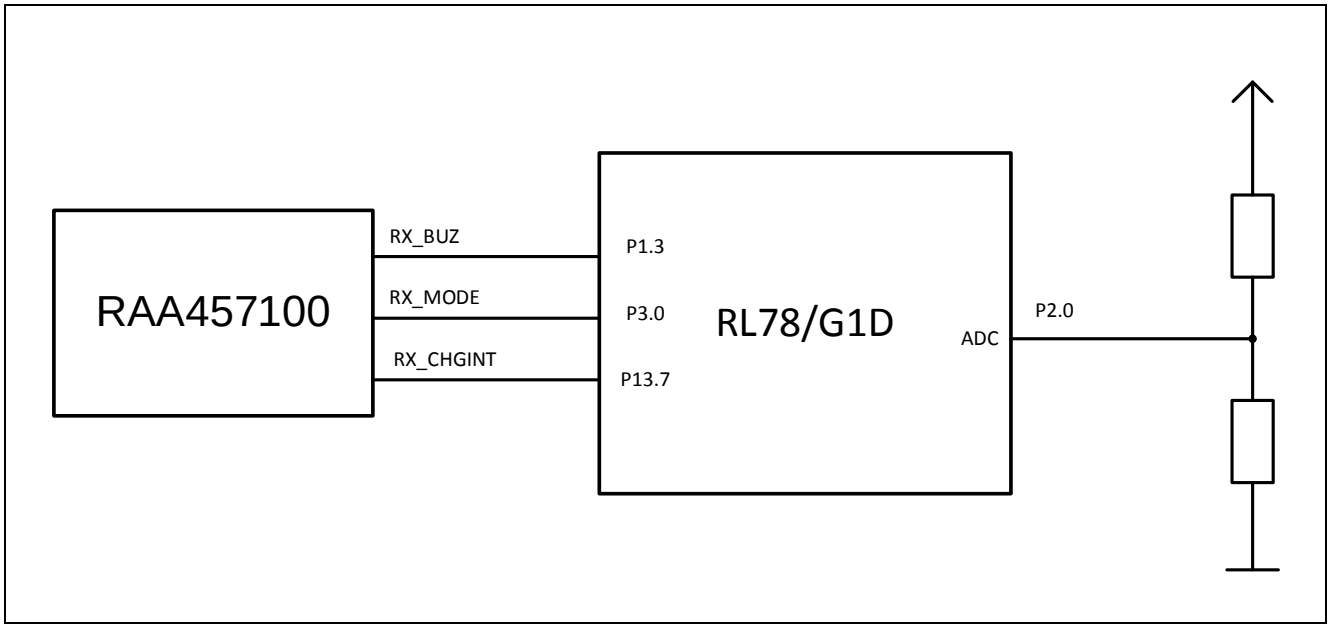

Figure 6: Charging Monitor

The monitoring of the status lines of the RX is done by the function ChrgApp_GetState(). The states are stored and transmitted in a single status byte.

Figure 6 depicts the elements of the charging monitor and their wiring. The voltage measurement and charging state monitoring are triggered from sensors_handler() in sensors.c. The data is transferred to the BLE API each second using the custom profile in r_scp_app_ble.c. For further details please read chapter 4.3.5.

4.2 File Composition

The entire software running in RL78/G1D is based on the RBLE stack V1.20.

Please find below the project tree showing only the files that have been added (A) or modified (M) in respect of the original RBLE stack.

```
Charge-It_Solution_Kit/
  ├── rBLE/
  │   └── src/
  │       ├── App/
  │       │   ├── Activity/
  │       │   │   ├── pedometer.c              (A)   ┐ Pedometer app
  │       │   │   └── pedometer.h              (A)   ┘
  │       │   ├── Charging/
  │       │   │   ├── r_chg_app.c              (A)   ┐ Charging app
  │       │   │   └── r_chg_app.h              (A)   ┘
  │       │   ├── HeartRateMonitor /
  │       │   │   ├── r_board_communication.h  (A)   ┐
  │       │   │   ├── r_hrm_app_comm.c         (A)   │ communication to HRM
  │       │   │   ├── r_hrm_app_comm.h         (A)   │
  │       │   │   ├── r_hrm_app_sw.c           (A)   │ button evaluation
  │       │   │   └── r_hrm_app_sw.h           (A)   ┘
  │       │   ├── Services /
  │       │   │   ├── r_hrm_app_ble.c          (A)   ┐ Heart rate profile BLE interface
  │       │   │   ├── r_hrm_app_ble.h          (A)   ┘
  │       │   │   ├── r_htp_app_ble.c          (A)   ┐ Health Thermometer BLE interface
  │       │   │   ├── r_htp_app_ble.h          (A)   ┘
  │       │   │   ├── r_rscp_app_ble.c         (A)   ┐ RSCP BLE interface
  │       │   │   ├── r_rscp_app_ble.h         (A)   ┘
  │       │   │   ├── r_scp_app_ble.c          (A)   ┐ Custom Profile BLE interface
  │       │   │   └── r_scp_app_ble.h          (A)   ┘
  │       │   ├── r_app_debug.h                (A)   -  error handling
  │       │   ├── r_app_task.h                 (A)   -  task definitions
  │       │   └── rble_app.c                   (A)   -  central application
  │       └── sample_profile/
  │           └── scp/
  │               └── scps.c                   (M)   - Custom Profile
  │
  └── renesas/
      └── src/
          ├── arch/
          │   └── rl78/
          │       ├── arch_main.c              (M)   ┐
          │       ├── db_handle.h               (M)   │ Modified
          │       ├── ke_conf.c                 (M)   │
          │       ├── prf_sel.c                 (M)   │
          │       ├── prf_config.c              (M)   │
          │       └── prf_config.h              (M)   │
          │       └── rwke_api.h                (M)   ┘
```

```
└── driver/
 ├── led/
 │  ├── led.c                    (M)   ┐ Modified for LED6 control
 │  └── led.h                    (M)   ┘
 ├── push_state/
 │  ├── push_state.c             (M)   ┐ Modified for SW2 monitoring
 │  └── push_state.h             (M)   ┘
 ├── sensors/
 │  ├── applilet3_src/           (A)   ┐ added Applilet code generator
 │  │  ├── r_adc.c               (A)   │ output used for needed device
 │  │  ├── r_adc_user.c          (A)   │ driver for sensor operation
 │  │  ├── r_cg_adc.h            (A)   │
 │  │  ├── r_cg_intc.c           (A)   │
 │  │  ├── r_cg_inth.h           (A)   │
 │  │  ├── r_cg_intc_user.h      (A)   │
 │  │  ├── r_cg_it.c             (A)   │
 │  │  ├── r_cg_it.h             (A)   │
 │  │  ├── r_cg_it_user.h        (A)   │
 │  │  ├── r_cg_macrodriver.h    (A)   │
 │  │  ├── r_cg_serial.c         (A)   │
 │  │  ├── r_cg_serial.h         (A)   │
 │  │  ├── r_cg_serial_user.h    (A)   │
 │  │  └── r_cg_userdefine.h     (A)   ┘
 │  ├── accel.c                  (A)   ┐ High-level driver for
 │  ├── accel.h                  (A)   ┘ accelerometer
 │  ├── bma2x2.c                 (A)   ┐ Low-level driver from Bosch for
 │  ├── bma2x2.h                 (A)   │ BMA055 accelerometer
 │  ├── bma2x2_ext.h             (A)   ┘
 │  ├── bmp280.c                 (A)   ┐ Low-Level driver from Bosch for
 │  ├── bmp280.h                 (A)   ┘ BMP280 pressure sensor
 │  ├── humidity.c               (A)   ┐ Driver for humidity sensor
 │  ├── humidity.h               (A)   ┘
 │  ├── light.c                  (A)   ┐ Driver for light sensor
 │  ├── light.h                  (A)   ┘
 │  ├── pressure.c               (A)   ┐ High-level driver for pressure
 │  ├── pressure.h               (A)   ┘ sensor
 │  ├── sensors.c                (A)   ┐ Sensors main module
 │  ├── sensors.h                (A)   ┘
 │  ├── thermometer.c            (A)   ┐ Driver from TI for TMP007 temp
 │  ├── thermometer.h            (A)   ┘ sensor
 └── uart/
    └── uart.c                   (M)   - Modified for HRM module support
```

4.3 BLE Profiles

4.3.1 Device Information Service

The following tables show the used UUIDs for the profile.

Table 1: Device Information Service

Service / Characteristic	Description / Values
Device Information Service	Type: Primary Service Declaration UUID: 0x180A
Manufacturer Name String	Type: Characteristic Declaration UUID: 0x2A29 Property: Read
Model Number String	Type: Characteristic Declaration UUID: 0x2A24 Property: Read
Serial Number String	Type: Characteristic Declaration UUID: 0x2A25 Property: Read
Hardware Revision String	Type: Characteristic Declaration UUID: 0x2A27 Property: Read
Firmware Revision String	Type: Characteristic Declaration UUID: 0x2A26 Property: Read
Software Revision String	Type: Characteristic Declaration UUID: 0x2A28 Property: Read
System ID	Type: Characteristic Declaration UUID: 0x2A23 Property: Read
IEEE 11073-20601 Regulatory Certification Data List	Type: Characteristic Declaration UUID: 0x2A2A Property: Read

4.3.2 Health Thermometer Profile

The health temperature is measured by the IR-temperature sensor and transmitted within the BT-SIG Health Thermometer Profile (HTP).

Table 2: Health Thermometer Service specification

Service / Characteristic	Description / Values
Health Thermometer Service	Type: Primary Service Declaration UUID: 0000**1809**-0000-1000-8000-00805f9b34fb
Temperature Measurement	Type: Characteristic Declaration UUID: 00002a1c-0000-1000-8000-00805f9b34fb Property: Indicate — Not used —
Temperature Type	Type: Characteristic Declaration UUID: 00002a1d-0000-1000-8000-00805f9b34fb Property: Read Temperature Type (1 Byte) = 0x02 (body)
Intermediate Temperature	Type: Characteristic Declaration UUID: 00002a1e-0000-1000-8000-00805f9b34fb Property: Notify Flags field (1Byte) = 0x06 Temperature Measurement Value (float) Timestamp array (7Byte) , filled with dummy data Temperature Type = 0x02 (body)
Measurement Interval	UUID: 00002a21-0000-1000-8000-00805f9b34fb Property: Read — Not used —

4.3.3 Heart Rate Profile

The transmission of the measured pulse values is performed within the BT-SIG Heart Rate Profile (HRP).

Table 3: Heart Rate Service specification

Service / Characteristic	Description / Values
Heart Rate Service	Type: Primary Service Declaration UUID: 0000**180d**-0000-1000-8000-00805f9b34fb
Heart Rate Measurement	Type: Characteristic Declaration UUID: 00002a37-0000-1000-8000-00805f9b34fb Property: Notify Flags field (1Byte) = 0x18 Heart Rate Value (1Byte) = 0 to 255 bpm Energy Expended field (2 Byte) = 1 when the S/N ratio is equal or more than the threshold RR-Interval field (2Byte) = 0
Body Sensor Location	Type: Characteristic Declaration UUID: 00002a38-0000-1000-8000-00805f9b34fb Property: Read Body Sensor Location field (1 Byte) = 0x03 (finger)
Heart Rate Control Point	Type: Characteristic Declaration UUID: 00002a39-0000-1000-8000-00805f9b34fb Property: Write — Not used —

4.3.4 Running Speed and Cadence Profile

The transmission of the measured cadence values and the calculated speed and distance values is performed within the BT-SIG Running Speed and Cadence profile (RSCP).

Table 4: Running Speed and Cadence Service specification

Service / Characteristic	Description / Values
Running Speed and Cadence Service	Type: Primary Service Declaration UUID: 0000**1814**-0000-1000-8000-00805f9b34fb
RSC Measurement	Type: Characteristic Declaration UUID: 00002a53-0000-1000-8000-00805f9b34fb Property: Notify Flags field (1Byte) = 0x03 Instantaneous Speed (2Byte) Instantaneous Cadence (1Byte) Instantaneous Stride Length (2Byte) Total Distance (4Byte)
RSC Feature	Type: Characteristic Declaration UUID: 00002a54-0000-1000-8000-00805f9b34fb Property: Read RSC Feature (2Byte) =0x1F00
Sensor Location	Type: Characteristic Declaration UUID: 00002a5D-0000-1000-8000-00805f9b34fb Property: Read Sensor Location (1Byte) = 0x01 (Top of shoe)
SC Control Point	Type: Characteristic Declaration UUID: 00002a55-0000-1000-8000-00805f9b34fb Property: Write / Indicate — Not used —

4.3.5 Custom Profile

The RBLE custom profile is used for all sensor values transmitted in one singe data array.

Table 5: Custom Service specification

Service / Characteristic	Description / Values
Custom Service	Type: Primary Service Declaration UUID: 01000000-0000-0000-0000-000000000080
Custom Characteristic	Type: Characteristic Declaration UUID: 02000000-0000-0000-0000-000000000080 Property: Notify Light sensor value (2Byte) Pressure sensor value (4Byte) Ambient temperature sensor value (2Byte) Humidity sensor value (2Byte) Pedometer steps (2Byte) Charging state (1Byte) Bit 0 : Mode line state Bit 1: Charge Int line state Bit 2: Buz line state Bit 3 -4: unused Battery voltage (1Byte)

4.4 Advertising

Table 6 shows the settings of advertising.

Table 6: Advertising specification

Advertising Type		Connectable undirected advertising (ADV_IND)
Advertising Interval Min		Default: 20 [ms]
Advertising Interval Max		Default: 60 [ms]
Advertising Channel Map		All Channels (37, 38, 39 ch)
Advertising Data		-
	Length of this Data	2 [bytes]
	Data Type	<<Flags>> (0x01)
	Flags	LE General Discoverable Mode BR/EDR Not Supported
	Length of this Data	9 [bytes]
	Data Type	<<Complete Local Name>> (0x09)
	Local Name	CHARGE-IT
	Length of this Data	3 [bytes]
	Data Type	<< Complete List of 16-bit Service Class UUIDs>> (0x03)
	UUID	0x180A (Device Information Service)
	Length of this Data	3 [bytes]
	Data Type	<< Complete List of 16-bit Service Class UUIDs>> (0x03)
	UUID	0x180D (Heart Rate Service)
	Length of this Data	3 [bytes]
	Data Type	<< Complete List of 16-bit Service Class UUIDs>> (0x03)
	UUID	0x1814 (Running Speed & Cadence Service)
	Length of this Data	3 [bytes]
	Data Type	<< Complete List of 16-bit Service Class UUIDs>> (0x03)
	UUID	0x1809 (Heath Thermometer Service)
	Scan Response Data	none

4.5 Connection

Table 7 shows the settings of connection.

Table 7: Connection specification

Scan Interval	30 [ms]
Scan Window Size	30 [ms]
Initiator Filter Policy	Ignore White List
Own Address Type	Public Address
Minimum of Connection Interval	30 [ms]
Maximum of Connection Interval	50 [ms]
Connection Latency	0 [ms]
Link Supervision Timeout	5 [s]
Minimum CE Length	0 [ms]
Maximum CE Length	50 [ms]

4.6 Pairing

Table 8 shows the settings of pairing.

Table 8: Pairing specification

Bonding	Bondable Mode
Security Mode	Unauthenticated pairing with encryption
Pairing Method	Just Works
IO capability	No Input No Output
OOB flag	OOB Data not present
Authentication Requirements	No MITM Bonding
Encryption key size	128 [bit]
Initiator key distribution	None
Responder key distribution	Encryption key

5. Android Application

The Android application “Charge-It has been tested on the following Android smart phones:

- Motorola G3 (Android OS 6.0)
- Lenovo P2 (Android OS 6.0)
- Lenovo K6 (Android OS 6.0)

In general it is able to run on smart phones with Android OS > 5.0.

5.1 Installation

The Charge-It Android application is delivered as self-installing Android Package (with extension .apk). Copy this file to the file system of your smartphone and execute it from there. Follow the instructions and the Charge-It app will be installed.

5.2 Overview

The app is divided into four independent function blocks that fit to the used BLE services: Sensors, Heart Rate Profile, Pedometer and Health Thermometer.

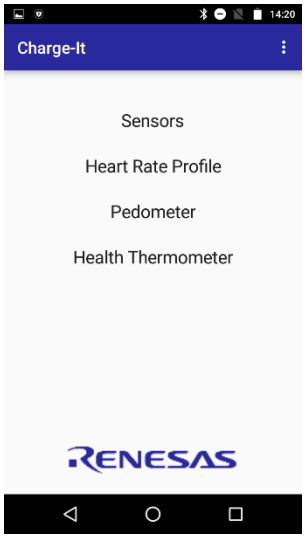

Figure 7: Charge-It App start screen

Before starting with the application switch on the Rx board (SW13 to “On” position).

Tab on any of these menu items. The application will automatically start to scan for BLE devices, see Figure 8.

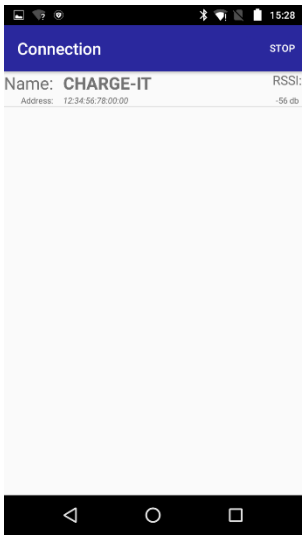

Figure 8: BLE Scan and connection

If the Rx board is powered, the battery is full enough and the board is in the range the device will be shown in the list. Please find the device with the name “Charge-It” and tap on it. It will be selected for connection request.

As soon as the connection is established the screen changes to the selected function view and the LED6 on the Rx board starts blinking.

5.3 Sensors

The sensors screen shows all measured values at a glance. Each time LED6 is toggled on the Rx board new values are acquired. **Please observe the battery voltage carefully. Make sure that the voltage does not drop under 3V. Charge the battery in time!**

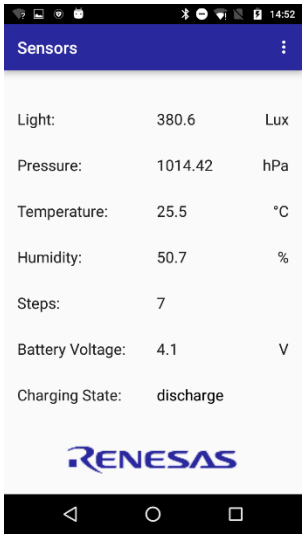

Figure 9: Sensors screen

5.4 Heart Rate

To explore the functionality of the optional heart rate module the measurement needs to be started by pushing the button SW2. The measurement is active when the green LEDs on the HRM module are flickering. Place your finger onto the sensor area and observe the measurement graph. After a while the correct pulse is settled. When removing to finger from the sensor, the sensor detects the missing pulse and stop the measurement. Figure 10 shows the graph on the heart rate screen.

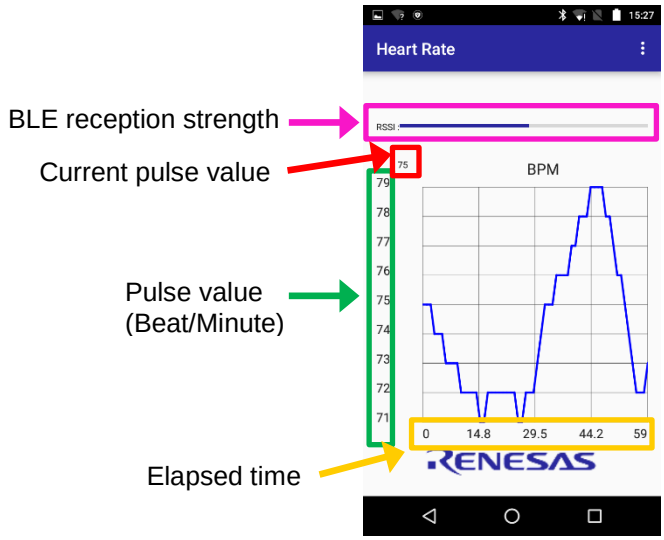

- Pulse value is updated in 1 second intervals
- Chart plots the latest 60 seconds
- The scale is adapted to the measured pulse values in the current view

Figure 10: Heart rate screen

To leave this part of the application press the back button on the smartphone. The connection will be terminated and the start screen is shown.

5.5 Pedometer

Figure 11: Pedometer screens

Figure 11 shows the three screens of the pedometer application. It illustrated graphically the three characteristics of the BLE Running Speed and Cadence profile cadence, speed and distance. Swipe to the right or to the left to change between those screens.

To simulate walking with the Charge-It kit, take the Rx board and shake it slowly up and down. The pedometer application on the RL78/G1D will detect a walking movement after a while and transmit the corresponding data to the smartphone. The base for the calculation of speed and distance is a stride length of 0.8m.

To leave this part of the application press the back button on the smartphone. The connection will be terminated and the start screen is shown.

5.6 Health Thermometer

Figure 12 depicts the health thermometer screen. It shows the BLE reception strength (RSSI) and the measured temperature of the Infrared thermopile sensor on the bottom side of the Rx board. The values are updated each second.

The sensor measures the infrared radiation of a body. Please keep in mind that the setup is only for demonstration purposes. It has not been calibrated for human body temperature measurements.

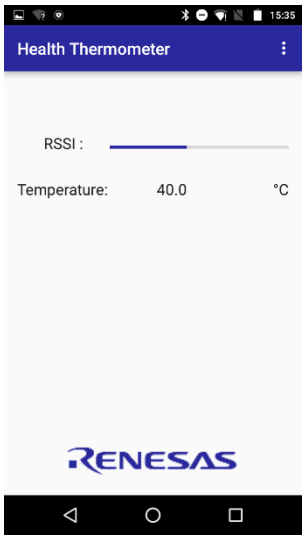

Figure 12: Health Thermometer screen

To leave this part of the application press the back button on the smartphone. The connection will be terminated and the start screen is shown.

6. RWCE PC Tool for charging control

6.1 System Requirements

Windows 7, 8, 8.1, 10 PC

6.2 Driver Installation

Windows7, 8 and 8.1 need to install driver software. Driver install procedure is below.

Windows10 does not need to install it.

1. Unzip “USBdriver.zip” on your PC.
2. Host adaptor “RTK0EF0029Z00001BJ” should be connected your PC by USB cable.
3. When device manager on your PC is opened, unrecognized device is displayed in table.
   Right click on unrecognized device, and select “Update driver software”.
4. Select “RTK0EF0029Z00000BC_Win7.inf” in “USBdriver” folder to install to your PC

6.3 Installation Guide

No installation is required for using this tool. (Registry will not be changed.)

Please unzip the .zip file into any folder from the attached CD. Run the file of “RWCE_Tool.exe” in unzipped folder, then RWCE tool will open.

In case of uninstallation, please delete the folder itself.

By the way, each settings describing after this is saved. So this tool restarts with settings just before closing.

If you want to return each settings to initial value, please replace files to just unzipped file.

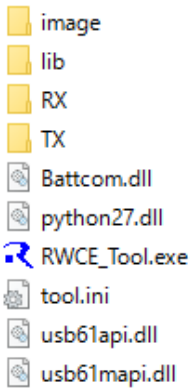

Figure 13 Unzipped file

6.4 Startup procedure (1) for ATPC Mode (AT4)

This chapter describes connection of evaluation board and usage of control tool in below condition.

- "ATPC Mode" (AT4): Automatic transmission power control mode. (Default setting in TX and Rx board)
- TxIC and RxIC are slave device setting in 2-wire serial communication interface.
- The control operation is realized by manipulating the control tool instead of TxMCU and RxMUC.

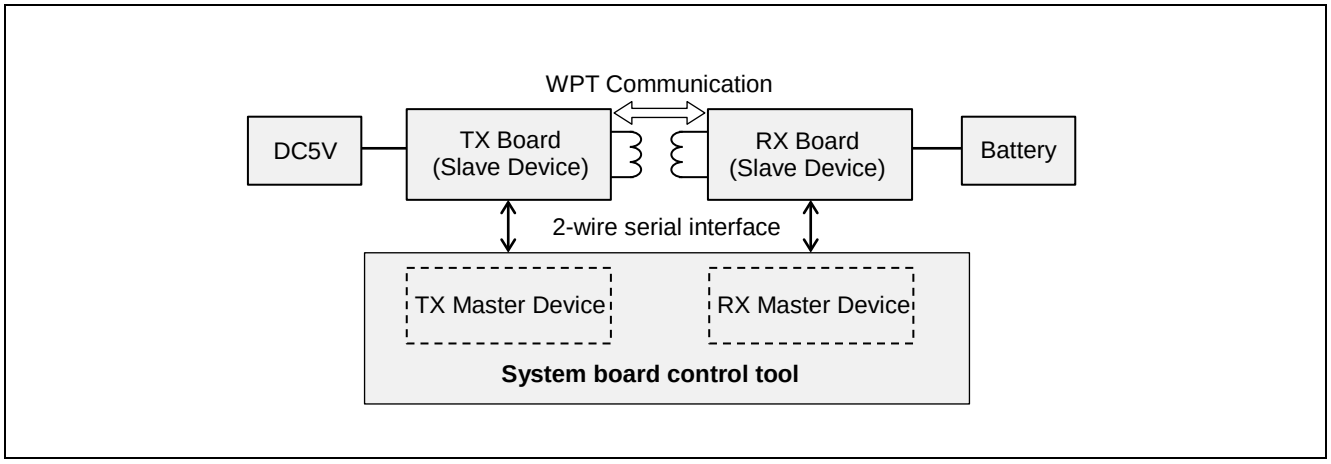

Figure 14 Evaluation system in AT4

6.4.1 Set up of evaluation board

Please read R19UH0104ED0100, chapter ATPC / AT4 mode for board setup.

In this application note, ATCHG pin setting is low for evaluation in AT4, but ATCHG pin should be set high if product system is actually configured in AT4.

6.4.2 Startup evaluation tool

When "RWCE_Tool.exe" runs, then following window depicted in Figure 1 opens. Set "2.2" kOhm in RICHG value for correct calculation of the tool, if not already done. When the fast charge current is changed to 1C, select "1C" in "ICC_THM_M".

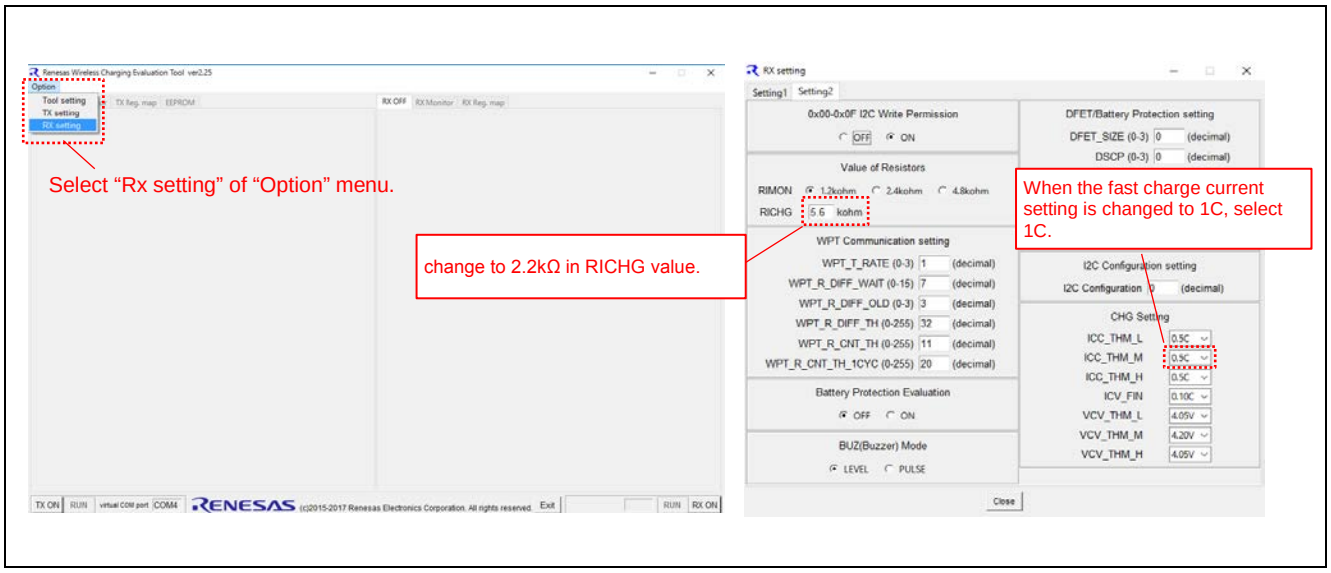

Figure 15 Tool window after start up

6.4.3 Wireless charging start / stop procedure

This section describes wireless charging procedure with control tool in ATPC Mode (AT4).

(1) Turn on the SW13 of RX board. LED4 is lightened for showing operation mode change to discharge mode from shut down mode at RAA457100GBM. LED3 is also lightened for showing DCDC converter operation.

(2) Turn on the SW14 of TX board. DC 5V is supplied to TX board and LED8 is lightened.

(3) Click the “TX ON” and the “RX ON” on tool window. Monitor for evaluation is displayed as Figure 16.

(4) Click the “RUN” in TX side and RX side on tool window.

RX side window: Animation of battery discharging and DCDC converter operation is displayed.

Register initial value is displayed in RX side monitor field.

TX side window: Monitored value is displayed in TX side monitor field.

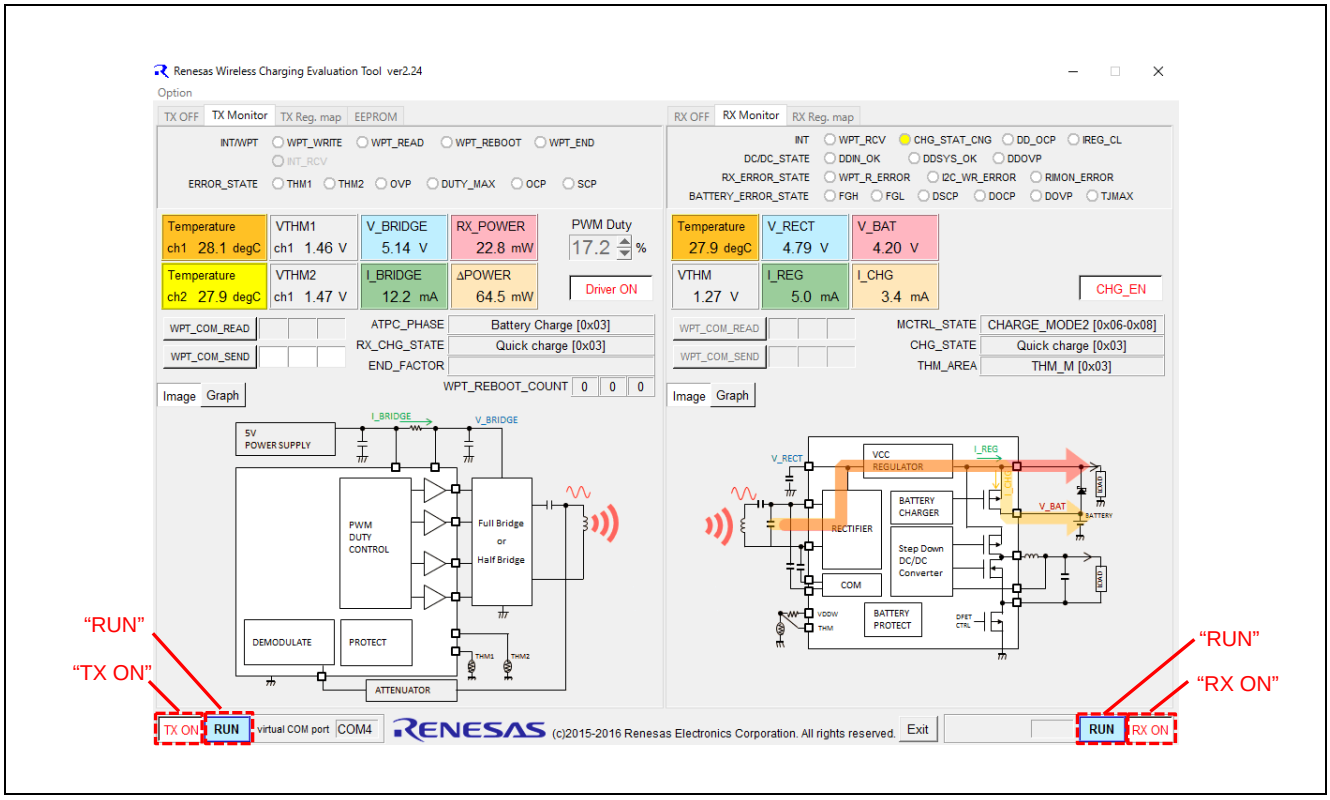

Figure 16 Control tool window at ATPC Mode

(5) Click the “Driver ON” in TX side.

Bridge circuit of transmitter starts and power is transmitted to RX side. TxIC controls bridge driver duty to set the RECT pin voltage of RxIC into BAT pin voltage + 1.5V. Animation of TX side and Rx side on tool window shows wireless power is transmitting. At this time monitored value is displayed in RX side monitor field. LED1 of the TX board flashes on and off every 0.25s (default setting).

(6) Click the “CHG EN” in RX side.

RxIC starts battery charging. At this time TxIC controls bridge driver duty to set RECT pin voltage of RxIC into BAT pin voltage + 0.5V. LED1 of the TX board is switched over from a flash every 0.25s to lighting up.

(7) Battery charging is completed when battery voltage reaches charge control voltage and charging current reaches charge complete current set by “Option” / “RX setting” on control tool. LED1 of the TX board is switched over from lighting up to turning off the lights.

(8) The “Driver ON” in TX side window can’t stop bridge circuit in ATPC Mode. When SW3 of TX board is pushed, TxIC become standby and TxIC register is initialized. Therefore bridge outputs stop. When SW3 of TX board is released, TxIC is activated. When TxIC is activated, TxIC register isn’t set. If you want to operate bridge circuit again, click the “TX ON” and close the TX side window. Then click the “TX ON” again, open the TX side window. Because TxIC register is set by this manipulation, bridge circuit operates again when the “Drive ON” in TX side is clicked.

(9) If the SW14 of TX board is turned off, the power supply in TX board is stopped.

6.5 Startup procedure (2) for ATPC Mode (AT1)

This chapter describes connection of evaluation board and usage of control tool in below condition.

- "ATPC Mode" (AT1). Automatic transmission power control mode.
- TxIC and RxIC are master setting in 2-wire serial communication interface.
- Register setting is read from the EEPROM in TX board.

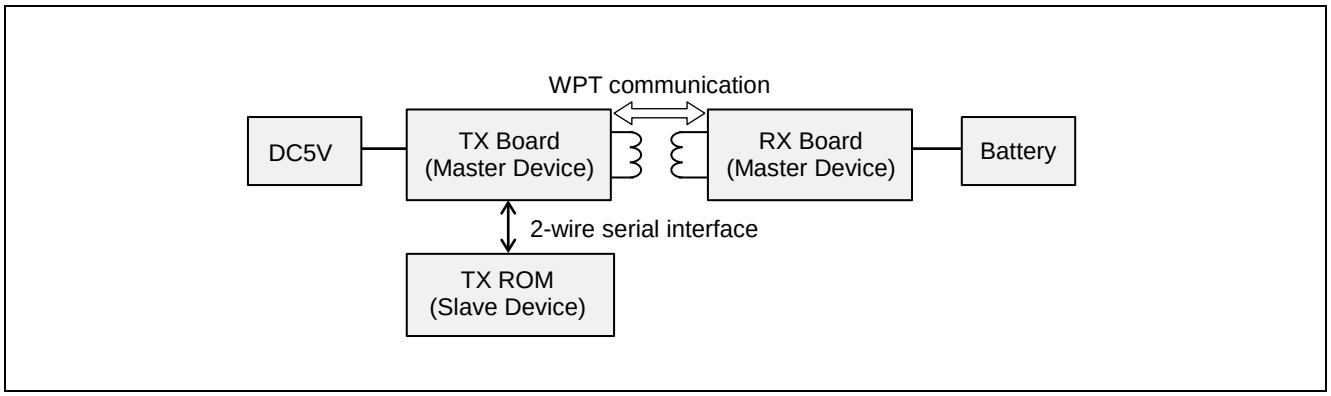

Figure 17 Evaluation system in AT1

6.5.1 Writing method to EEPROM in TX board

The control tool has EEPROM Write/Read tool. This section describes the procedure that necessary data is written into EEPROM in below condition.

- PWM initial duty is 20[%], fast charge current is 0.5xICHGR.

6.5.2 Set up of evaluation board

Please read R19UH0104ED0100, chapter ATPC / AT4 mode for board setup.

6.5.3 Startup procedure of EEPROM Write/Read tool

(1) Turn on SW14 of TX board, Supply DC5V to TX board.

(2) When "RWCE_Tool.exe" run, then following window opens.

(3) When "TX setting" in "Option" menu is selected, TX setting window opens.

(4) Select "Master" in Setting1 window, then click "Close" button

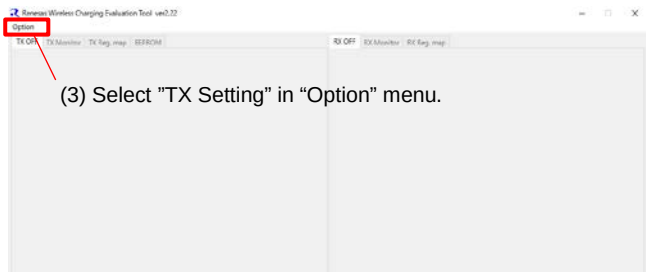

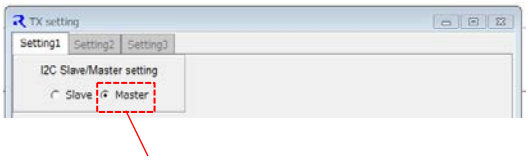

Figure 18 2-wire serial communication interface Slave/Master setting of TxIC in control tool

(5) When “TX ON” button is pushed, EEPROM Write / Read control tool opens. (Figure 19)

(6) Input EEPROM slave address into “I2C Slave Address”. Because default value is ”1010001” and EEPROM address setting of TX board is ”1010001”, Input address is not necessary.

(7) Input TX register address and data, RX register address and data into EEPROM tool window. For example, Figure 4.4 shows register setting that bridge duty is 25 [%] and fast charge current is 0.5xICHGR. Because the condition that fast charge current is 0.5xICHGR is default setting, RxIC register setting is only that CHG_EN is ON.

(8) When the “Write” button in tool window is clicked, data is written into EEPROM.

(9) When the “Read” button in tool window is clicked, written data in EEPROM is displayed. Confirm the EEPROM data.

(10) Click the “Exit” button in tool window, then close the control tool.

(11) Remove host adaptor output cable from TX board, Turn off the SW14 of TX board.

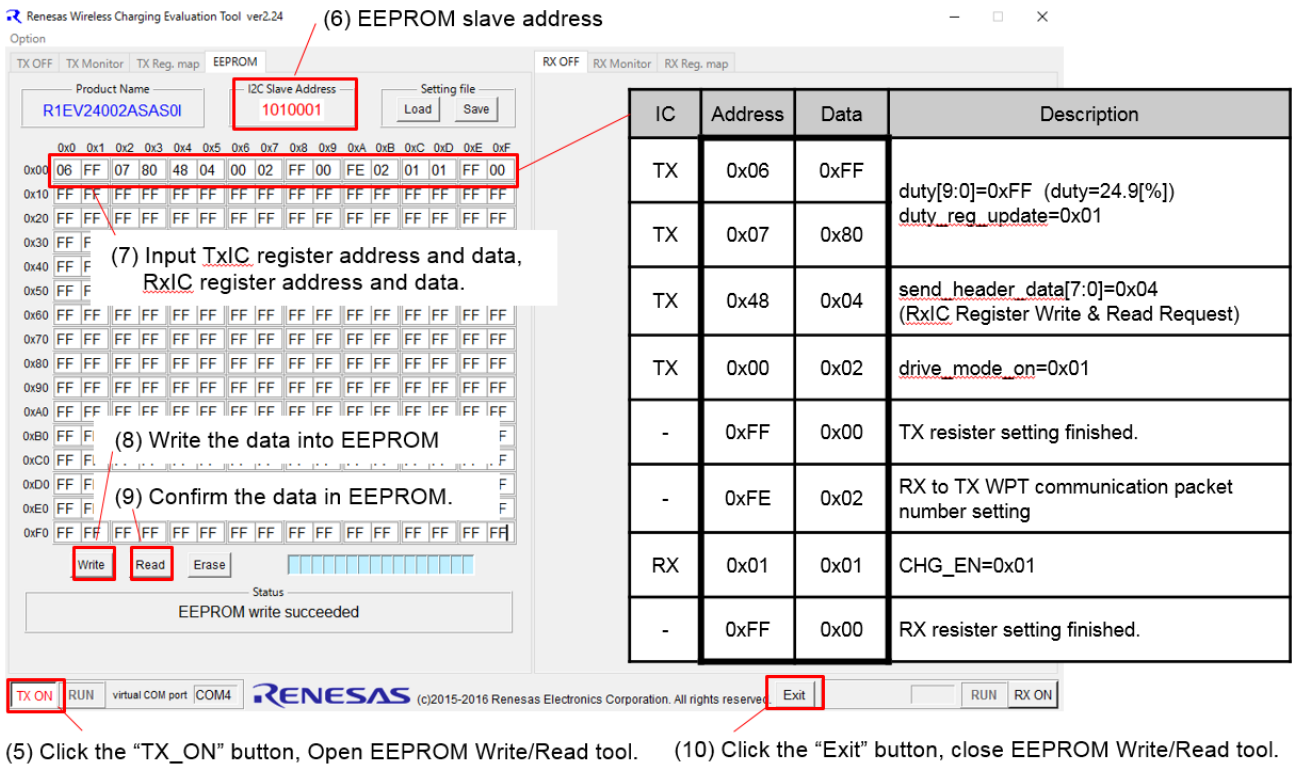

IC	Address	Data	Description
TX	0x06	0xFF	duty[9:0]=0xFF (duty=24.9[%]) duty_reg_update=0x01
TX	0x07	0x80	
TX	0x48	0x04	send_header_data[7:0]=0x04 (RxIC Register Write & Read Request)
TX	0x00	0x02	drive_mode_on=0x01
-	0xFF	0x00	TX resister setting finished.
-	0xFE	0x02	RX to TX WPT communication packet number setting
RX	0x01	0x01	CHG_EN=0x01
-	0xFF	0x00	RX resister setting finished.

Figure 19 EEPROM Write/Read tool window

6.6 Startup procedure (3) for MCU Control Mode (MC1)

This chapter describes connection of evaluation board and usage of control tool in below condition.

- "MCU Control Mode": Bridge driver duty is set by control tool.
- TxIC and RxIC are slave setting in 2-wire serial communication interface.
- The control operation is realized by manipulating the control tool instead of TxMCU and RxMUC

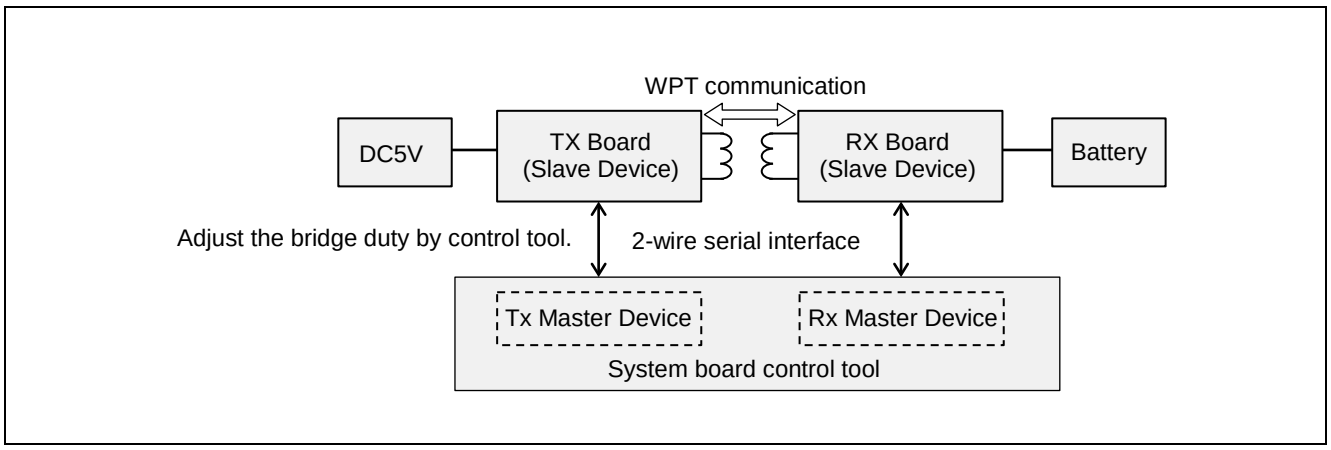

Figure 20 Evaluation system in MC1

6.6.1 Connection of evaluation board

Please read R19UH0104ED0100, chapter MC1 mode for board setup.

6.6.2 Preparation

(1) Install the driver of host adapter. Refer 6.2.

(2) Run the control tool. Click the "Tool setting" in "Option" menu.

Select "System configuration" in "Option" menu and select "MCU Control Mode".

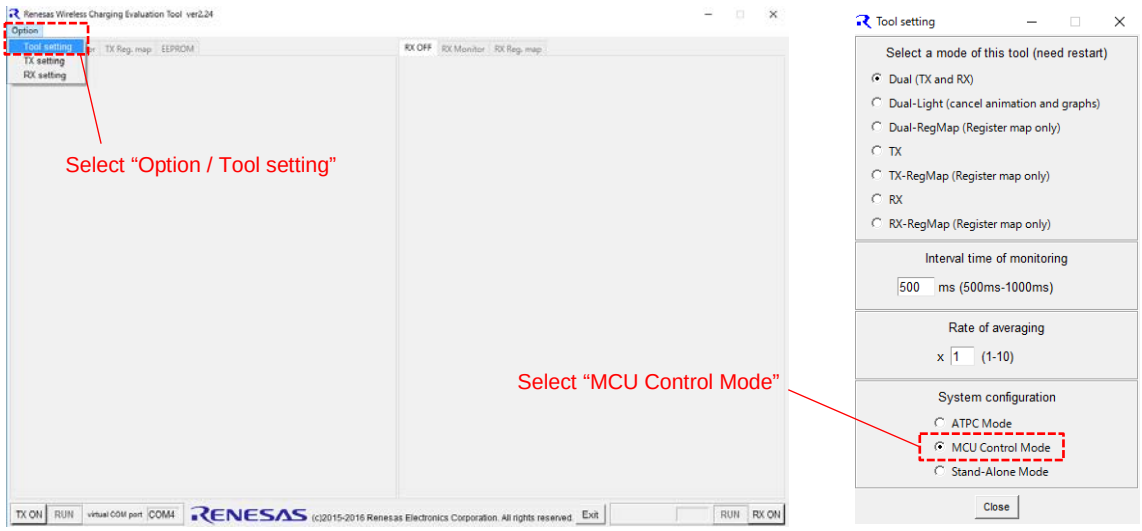

Figure 21 Tool window after start up

6.6.3 Wireless charging start / stop procedure in MC1

This section describes wireless charging procedure with control tool in MCU Control Mode.

(1) Turn on the SW13 of RX board. LED5 is lightened for showing availability of Wireless Power Transfer from TX board. DCDC (LED3) is also lightened for showing DCDC converter operation.

(2) Turn on the SW14 of TX board. DC 5V is supplied to TX board.

(3) Click the "TX ON" and the "RX ON" on tool window. Monitor for evaluation is displayed as Figure 22.

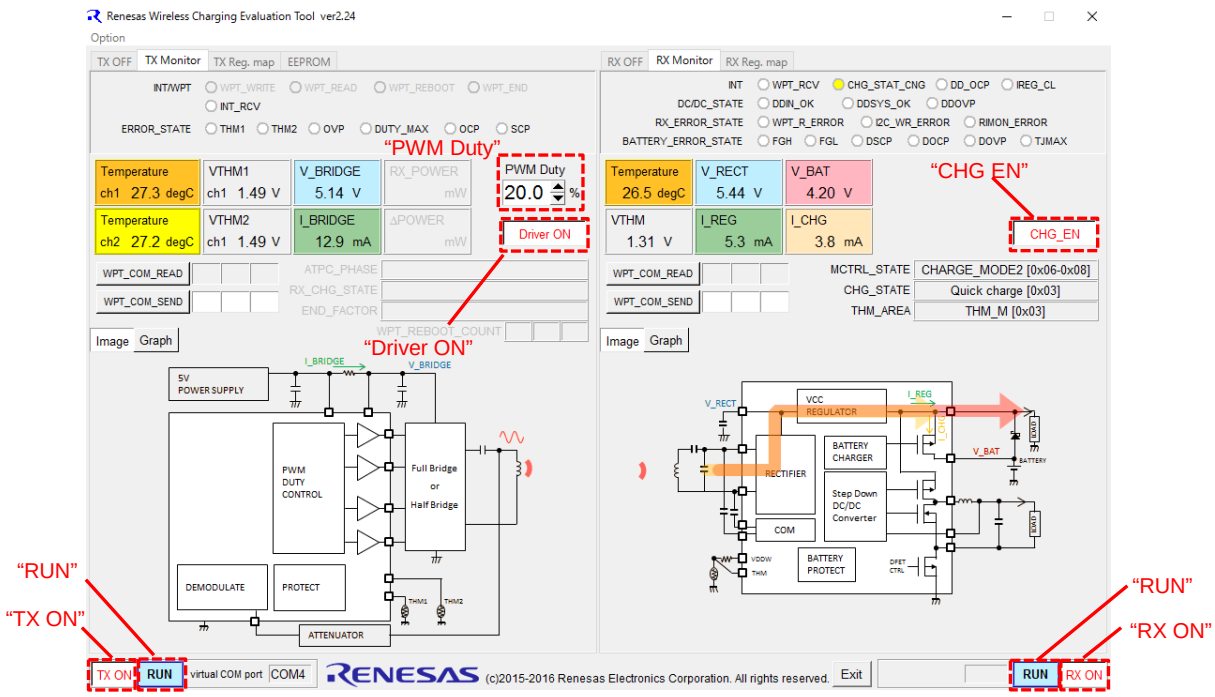

Figure 22 Control tool window in MCU Control Mode

(4) Click the "RUN" in TX side and RX side on tool window.

RX side window: Animation of battery discharging and DCDC converter operation is displayed. Register initial value is displayed in RX side monitor field.

TX side window: Monitored value is displayed in TX side monitor field.

(5) Click the "Driver ON" in TX side.

Bridge circuit of transmitter starts and power is transmitted to RX board. Animation of TX side and RX side on tool window shows wireless power is transmitting. At this time monitored value is displayed in Rx side monitor field. Bridge driver duty can be set by entering directly value into "PWM Duty" or clicking up/down button in 0.1% resolution.

(6) Click the "CHG EN" in RX side.

RxIC starts battery charging.

(7) Battery charging is completed when battery voltage reaches charge control voltage and charging current reaches charge complete current set by "Option" / "RX setting" on control tool.

(8) The "Driver ON" in TX side can stop bridge circuit in MCU Control Mode. When the "Drive ON" is clicked in operating bridge circuit, bridge circuit stop.

(9) If the SW14 of TX board is turned off, the power supply in TX board is stopped.

6.7 Option Settings

6.7.1 Setting of RX IC

Register of RX IC ”RAA457100GBM” can be set initially on “RX setting” choosing from “Option” menu.

“RX setting” has two tabs such as “Setting1” and “Setting2”.

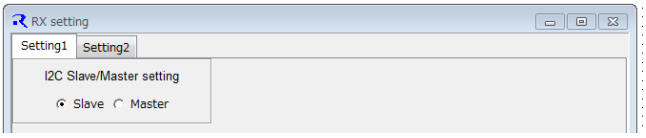

Master device or slave device for 2-wire serial communication interface of RAA457100 can be selected. Main window function and register map tool is available at Slave. Main window and register map tool is unavailable at Master.

Figure 23 RX Setting1

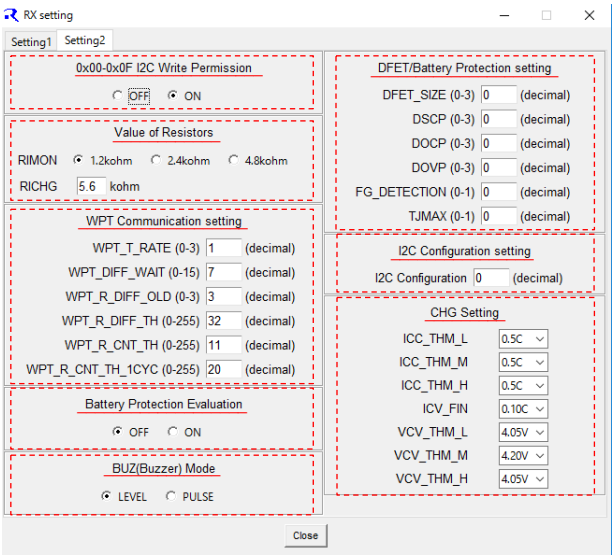

Figure 24 RX Setting2

- **<u>0x00-0x0F I2C Write Permission</u>**

  Select ON or OFF of I2C Write Permission in address 0x00 to 0x0F at register map. Refer to 0x40 D0 at register map.

- **<u>Value of Resistors</u>**

  Select RIMON resistance of RIMON pin. 1.2k ohm should be selected.

  Set RICHG resistance of RICHG pin.

  - 2.2k ohm should be set.

- **<u>WPT Communication setting</u>**

  Initial register setting for WPT communication. Refer to Table 9.

- **Battery Protection Evaluation**

  If “OFF” is selected, 2-wire serial communication interface is unavailable when battery protection is detected and DFET is off. If “ON” is selected for evaluation, DFET is NOT off when battery protection is detected, and 2-wire serial communication interface is available.

- **BUZ Mode**

  Select notification action of BUZ pin when battery low voltage is detected. Refer to 0x34 D2 at register map.

  - LEVEL: Output low level
  - PULSE: Output pulse

- **DFET/Battery Protection setting**

  Set Battery protection parameters. Refer to Table 10Input items of “WPT Communication setting”.

- **I2C Configuration setting**

  Zero should be set.

- **CHG setting**

  Set charge control profile for battery temperature. Set fast charge current, charge complete current, and constant voltage charge control voltage. Refer to Table 11.

Table 9: Input items of “WPT Communication setting”

Item	RxIC Register	Description
WPT_T_RATE	0x27 D[1:0]	WPT communication data rate setting. (Receiver to Transmitter communication)
WPT_R_DIFF_WAIT	0x27 D[7:4]	Timing to acquire the rectified output voltage variation for WPT communication packet demodulation.
WPT_R_DIFF_OLD	0x27 D[3:2]	Assigning data point to calculate the rectified output voltage variation for WPT communication packet demodulation.
WPT_R_DIFF_TH	0x28 D[7:0]	Threshold to detect the rectified output voltage variation for WPT communication packet demodulation.
WPT_R_CNT_TH	0x29 D[7:0]	Counter timing to detect data 0/1 for WPT communication packet demodulation.
WPT_R_CNT_TH_1CYC	0x2A D[7:0]	Counter timing to detect data presence/absence for WPT communication packet demodulation.

Table 10: Input items of "DFET/Battery protection setting"

Item	Description			
DFET SIZE	Set DFET resistance. 0: 160m ohm, 1: 320m ohm, 2: 480m ohm, 3: 640m ohm			
DSCP	Set discharge short circuit current detection level. 0: 100mV, 1: 120mV, 2: 140mV, 3: 160mV			
DOCP	Set discharge overcurrent detection level 0: 50mV, 1: 60mV, 2: 70mV, 3: 80mV			
DOVP	Set discharge overvoltage detection level 0: 2.8V, 1: 2.7V, 2: 2.9V, 3: 3.0V			
FG DETECTION	Set battery low voltage detection level depending on DCDC converter output voltage.			
	Value	DCDC output voltage setting	Detection level high	Detection level low
	0	1.2V,1.5V,1.8V	3.20V	3.05V
	0	3.0V	3.55V	3.35V
	1	1.2V,1.5V,1.8V	3.30V	3.15V
	1	3.0V	3.65V	3.45V
TJMAX	Junction temperature detection level 0: 68[degC] 1: 79[degC]			

Table 11: Input items of "Charge Setting"

Item	RxIC Register	Description
ICC_THM_L	0x02 D[3:2]	Fast charge current setting of low temperature operation in battery temperature profile. (1C / 0.5C / 0.25C)
ICC_THM_M	0x02 D[5:4]	Fast charge current setting of suitable temperature operation in battery temperature profile. (1C / 0.5C / 0.25C)
ICC_THM_H	0x02 D[7:6]	Fast charge current setting of high temperature operation in battery temperature profile. (1C /0.5C / 0.25C)
ICV_FIN	0x03 D[1:0]	Constant voltage charge complete current setting. (0.05C / 0.10C /0.15C /0.20C)
VCV_THM_L	0x03 D[3:2]	Constant voltage charge control voltage setting of low temperature operation in battery temperature profile. (4.05V / 4.20V / 4.35V)
VCV_THM_M	0x03 D[5:4]	Constant voltage charge control voltage setting of suitable temperature operation in battery temperature profile. (4.05V / 4.20V /4.35V)
VCV_THM_H	0x03 D[7:6]	Constant voltage charge control voltage setting of high temperature operation in battery temperature profile. (4.05V /4.20V /4.35V)

7. Regulatory Notice

Note to users in the United States of America

Caution: Changes or modifications not expressly approved by the party responsible for compliance could void the user's authority to operate the equipment.

Declaration of Conformity

This device complies with part 15 of FCC Rules.

Operation is subject to the following two conditions:

(1) This device may not cause harmful interference, and

(2) This device must accept any interference received, including interference that may cause undesired operation.

Note to users in Canada

This device complies with Industry Canada's licence-exempt RSSs.

Operation is subject to the following two conditions:

(1) This device may not cause interference; and

(2) This device must accept any interference, including interference that may cause undesired operation of the device.

Le présent appareil est conforme aux CNR d'Industrie Canada applicables aux appareils radio exempts de licence.

L'exploitation est autorisée aux deux conditions suivantes :

(1) l'appareil ne doit pas produire de brouillage, et

(2) l'utilisateur de l'appareil doit accepter tout brouillage radioélectrique subi, même si le brouillage est susceptible d'en compromettre le fonctionnement.

This equipment has been tested and found to comply with the limits for a Class B digital device, pursuant to Part 15 of the FCC Rules. These limits are designed to provide reasonable protection against harmful interference in a residential installation. This equipment generates, uses and can radiate radio frequency energy and, if not installed and used in accordance with the instructions, may cause harmful interference to radio communications. However, there is no guarantee that interference will not occur in a particular installation. If this equipment does cause harmful interference to radio or television reception, which can be determined by turning the equipment off and on, the user is encouraged to try to correct the interference by one or more of the following measures:

- Reorient or relocate the receiving antenna.
- Increase the separation between the equipment and receiver.
- Connect the equipment into an outlet on a circuit different from that to which the receiver is connected.
- Consult the dealer or an experienced radio/TV technician for help.

Operating distance

To fulfill the FCC radio frequency (RF) exposure evaluation guidelines and RSS-102 of the IC radio frequency (RF) exposure rules, the Charge-It Solution Kit Tx board must be kept away at least 20 cm from all persons during normal operation.

The Charge-It Solution Kit Rx board complies with FCC/IC radiation exposure limits set forth for an uncontrolled environment and meets the FCC radio frequency (RF) exposure guidelines and RSS-102 of the IC radio frequency (RF)

exposure rules. This equipment has very low levels of RF energy that is deemed to comply without maximum permissive exposure evaluation (MPE).

Cet équipement est conforme aux limites d’exposition aux rayonnements énoncées pour un environnement non contrôlé et respecte les règles les radioélectriques (RF) de la FCC lignes directrices d'exposition et d’exposition aux fréquences radioélectriques (RF) CNR-102 de l’IC. Cet équipement émet une énergie RF très faible qui est considérée comme conforme sans évaluation de l’exposition maximale autorisée (MPE).

Website and Support

Renesas Electronics Website
http://www.renesas.com/

Inquiries
http://www.renesas.com/contact/

All trademarks and registered trademarks are the property of their respective owners.

Revision History

		Description	
Rev.	**Date**	**Page**	**Summary**
1.00	04.09.2017	All	First completed version
1.01	15.12.2017	37	Added regulatory notice

General Precautions in the Handling of Microprocessing Unit and Microcontroller Unit Products

The following usage notes are applicable to all Microprocessing unit and Microcontroller unit products from Renesas. For detailed usage notes on the products covered by this document, refer to the relevant sections of the document as well as any technical updates that have been issued for the products.

1. Handling of Unused Pins

   Handle unused pins in accordance with the directions given under Handling of Unused Pins in the manual.

   — The input pins of CMOS products are generally in the high-impedance state. In operation with an unused pin in the open-circuit state, extra electromagnetic noise is induced in the vicinity of LSI, an associated shoot-through current flows internally, and malfunctions occur due to the false recognition of the pin state as an input signal become possible. Unused pins should be handled as described under Handling of Unused Pins in the manual.

2. Processing at Power-on

   The state of the product is undefined at the moment when power is supplied.

   — The states of internal circuits in the LSI are indeterminate and the states of register settings and pins are undefined at the moment when power is supplied.
   In a finished product where the reset signal is applied to the external reset pin, the states of pins are not guaranteed from the moment when power is supplied until the reset process is completed.
   In a similar way, the states of pins in a product that is reset by an on-chip power-on reset function are not guaranteed from the moment when power is supplied until the power reaches the level at which resetting has been specified.

3. Prohibition of Access to Reserved Addresses

   Access to reserved addresses is prohibited.

   — The reserved addresses are provided for the possible future expansion of functions. Do not access these addresses; the correct operation of LSI is not guaranteed if they are accessed.

4. Clock Signals

   After applying a reset, only release the reset line after the operating clock signal has become stable. When switching the clock signal during program execution, wait until the target clock signal has stabilized.

   — When the clock signal is generated with an external resonator (or from an external oscillator) during a reset, ensure that the reset line is only released after full stabilization of the clock signal. Moreover, when switching to a clock signal produced with an external resonator (or by an external oscillator) while program execution is in progress, wait until the target clock signal is stable.

5. Differences between Products

   Before changing from one product to another, i.e. to a product with a different part number, confirm that the change will not lead to problems.

   — The characteristics of Microprocessing unit or Microcontroller unit products in the same group but having a different part number may differ in terms of the internal memory capacity, layout pattern, and other factors, which can affect the ranges of electrical characteristics, such as characteristic values, operating margins, immunity to noise, and amount of radiated noise. When changing to a product with a different part number, implement a system-evaluation test for the given product.

Notice

1. Descriptions of circuits, software and other related information in this document are provided only to illustrate the operation of semiconductor products and application examples. You are fully responsible for the incorporation or any other use of the circuits, software, and information in the design of your product or system. Renesas Electronics disclaims any and all liability for any losses and damages incurred by you or third parties arising from the use of these circuits, software, or information.
2. Renesas Electronics hereby expressly disclaims any warranties against and liability for infringement or any other disputes involving patents, copyrights, or other intellectual property rights of third parties, by or arising from the use of Renesas Electronics products or technical information described in this document, including but not limited to, the product data, drawing, chart, program, algorithm, application examples.
3. No license, express, implied or otherwise, is granted hereby under any patents, copyrights or other intellectual property rights of Renesas Electronics or others.
4. You shall not alter, modify, copy, or otherwise misappropriate any Renesas Electronics product, whether in whole or in part. Renesas Electronics disclaims any and all liability for any losses or damages incurred by you or third parties arising from such alteration, modification, copy or otherwise misappropriation of Renesas Electronics products.
5. Renesas Electronics products are classified according to the following two quality grades: "Standard" and "High Quality". The intended applications for each Renesas Electronics product depends on the product's quality grade, as indicated below.

   "Standard": Computers; office equipment; communications equipment; test and measurement equipment; audio and visual equipment; home electronic appliances; machine tools; personal electronic equipment; and industrial robots etc.

   "High Quality": Transportation equipment (automobiles, trains, ships, etc.); traffic control (traffic lights); large-scale communication equipment; key financial terminal systems; safety control equipment; etc.

   Renesas Electronics products are neither intended nor authorized for use in products or systems that may pose a direct threat to human life or bodily injury (artificial life support devices or systems, surgical implantations etc.), or may cause serious property damages (space and undersea repeaters; nuclear power control systems; aircraft control systems; key plant systems; military equipment; etc.). Renesas Electronics disclaims any and all liability for any damages or losses incurred by you or third parties arising from the use of any Renesas Electronics product for which the product is not intended by Renesas Electronics.
6. When using the Renesas Electronics products, refer to the latest product information (data sheets, user's manuals, application notes, "General Notes for Handling and Using Semiconductor Devices" in the reliability handbook, etc.), and ensure that usage conditions are within the ranges specified by Renesas Electronics with respect to maximum ratings, operating power supply voltage range, heat radiation characteristics, installation, etc. Renesas Electronics disclaims any and all liability for any malfunctions or failure or accident arising out of the use of Renesas Electronics products beyond such specified ranges.
7. Although Renesas Electronics endeavors to improve the quality and reliability of Renesas Electronics products, semiconductor products have specific characteristics such as the occurrence of failure at a certain rate and malfunctions under certain use conditions. Further, Renesas Electronics products are not subject to radiation resistance design. Please ensure to implement safety measures to guard them against the possibility of bodily injury, injury or damage caused by fire, and social damage in the event of failure or malfunction of Renesas Electronics products, such as safety design for hardware and software including but not limited to redundancy, fire control and malfunction prevention, appropriate treatment for aging degradation or any other appropriate measures by your own responsibility as warranty for your products/system. Because the evaluation of microcomputer software alone is very difficult and not practical, please evaluate the safety of the final products or systems manufactured by you.
8. Please contact a Renesas Electronics sales office for details as to environmental matters such as the environmental compatibility of each Renesas Electronics product. Please investigate applicable laws and regulations that regulate the inclusion or use of controlled substances, including without limitation, the EU RoHS Directive carefully and sufficiently and use Renesas Electronics products in compliance with all these applicable laws and regulations. Renesas Electronics disclaims any and all liability for damages or losses occurring as a result of your noncompliance with applicable laws and regulations.
9. Renesas Electronics products and technologies shall not be used for or incorporated into any products or systems whose manufacture, use, or sale is prohibited under any applicable domestic or foreign laws or regulations. You shall not use Renesas Electronics products or technologies for (1) any purpose relating to the development, design, manufacture, use, stockpiling, etc., of weapons of mass destruction, such as nuclear weapons, chemical weapons, or biological weapons, or missiles (including unmanned aerial vehicles (UAVs)) for delivering such weapons, (2) any purpose relating to the development, design, manufacture, or use of conventional weapons, or (3) any other purpose of disturbing international peace and security, and you shall not sell, export, lease, transfer, or release Renesas Electronics products or technologies to any third party whether directly or indirectly with knowledge or reason to know that the third party or any other party will engage in the activities described above. When exporting, selling, transferring, etc., Renesas Electronics products or technologies, you shall comply with any applicable export control laws and regulations promulgated and administered by the governments of the countries asserting jurisdiction over the parties or transactions.
10. Please acknowledge and agree that you shall bear all the losses and damages which are incurred from the misuse or violation of the terms and conditions described in this document, including this notice, and hold Renesas Electronics harmless, if such misuse or violation results from your resale or making Renesas Electronics products available any third party.
11. This document shall not be reprinted, reproduced or duplicated in any form, in whole or in part, without prior written consent of Renesas Electronics.
12. Please contact a Renesas Electronics sales office if you have any questions regarding the information contained in this document or Renesas Electronics products.

(Note 1) "Renesas Electronics" as used in this document means Renesas Electronics Corporation and also includes its majority-owned subsidiaries.

(Note 2) "Renesas Electronics product(s)" means any product developed or manufactured by or for Renesas Electronics.

(Rev.3.0-1 November 2016)

SALES OFFICES Renesas Electronics Corporation http://www.renesas.com

Refer to "http://www.renesas.com/" for the latest and detailed information.

Renesas Electronics America Inc.
2801 Scott Boulevard Santa Clara, CA 95050-2549, U.S.A.
Tel: +1-408-588-6000, Fax: +1-408-588-6130

Renesas Electronics Canada Limited
9251 Yonge Street, Suite 8309 Richmond Hill, Ontario Canada L4C 9T3
Tel: +1-905-237-2004

Renesas Electronics Europe Limited
Dukes Meadow, Millboard Road, Bourne End, Buckinghamshire, SL8 5FH, U.K
Tel: +44-1628-585-100, Fax: +44-1628-585-900

Renesas Electronics Europe GmbH
Arcadiastrasse 10, 40472 Düsseldorf, Germany
Tel: +49-211-6503-0, Fax: +49-211-6503-1327

Renesas Electronics (China) Co., Ltd.
Room 1709, Quantum Plaza, No.27 ZhiChunLu Haidian District, Beijing 100191, P.R.China
Tel: +86-10-8235-1155, Fax: +86-10-8235-7679

Renesas Electronics (Shanghai) Co., Ltd.
Unit 301, Tower A, Central Towers, 555 Langao Road, Putuo District, Shanghai, P. R. China 200333
Tel: +86-21-2226-0888, Fax: +86-21-2226-0999

Renesas Electronics Hong Kong Limited
Unit 1601-1611, 16/F., Tower 2, Grand Century Place, 193 Prince Edward Road West, Mongkok, Kowloon, Hong Kong
Tel: +852-2265-6688, Fax: +852 2886-9022

Renesas Electronics Taiwan Co., Ltd.
13F, No. 363, Fu Shing North Road, Taipei 10543, Taiwan
Tel: +886-2-8175-9600, Fax: +886 2-8175-9670

Renesas Electronics Singapore Pte. Ltd.
80 Bendemeer Road, Unit #06-02 Hyflux Innovation Centre, Singapore 339949
Tel: +65-6213-0200, Fax: +65-6213-0300

Renesas Electronics Malaysia Sdn.Bhd.
Unit 1207, Block B, Menara Amcorp, Amcorp Trade Centre, No. 18, Jln Persiaran Barat, 46050 Petaling Jaya, Selangor Darul Ehsan, Malaysia
Tel: +60-3-7955-9390, Fax: +60-3-7955-9510

Renesas Electronics India Pvt. Ltd.
No.777C, 100 Feet Road, HAL II Stage, Indiranagar, Bangalore, India
Tel: +91-80-67208700, Fax: +91-80-67208777

Renesas Electronics Korea Co., Ltd.
12F., 234 Teheran-ro, Gangnam-Gu, Seoul, 135-080, Korea
Tel: +82-2-558-3737, Fax: +82-2-558-5141

© 2017 Renesas Electronics Corporation. All rights reserved.

Colophon 6.0