COSTWAY®

EN

With your inspiring rating, COSTWAY will be more consistent to offer you EASY SHOPPING EXPERIENCE, GOOD PRODUCTS and EFFICIENT SERVICE!

DE

Mit Ihrer inspirierenden Bewertung wird COSTWAY konsistenter sein, um Ihnen EIN SCHÖNES EINKAUFSERLEBNIS, GUTE PRODUKTE und EFFIZIENTEN SERVICE zu bieten!

FR

Avec votre évaluation inspirante, COSTWAY continuera à fournir une EXPÉRIENCE D'ACHAT PRATIQUE, des PRODUITS DE QUALITÉ et un SERVICE EFFICACE !

ES

Con su calificación inspiradora, COSTWAY será más consistente para ofrecerle EXPERIENCIA DE COMPRA FÁCIL, BUENOS PRODUCTOS y SERVICIO EFICIENTE.

IT

Con la tua valutazione incoraggiante, COSTWAY sarà più coerente per offrirti ESPERIENZA DI ACQUISTO FACILE, BUONI PRODOTTI e SERVIZIO EFFICIENTE!

PL

Dzięki twojej opinii COSTWAY będzie mógł oferować jeszcze WYGODNIEJSZE ZAKUPY, LEPSZE PRODUKTY i SPRAWNIEJSZĄ OBSŁUGĘ KLIENTA.

US office: Fontana **UK** office: Ipswich **AU** office: Truganina
DE office: Hamburg **FR** office: Saint Vigor d'Ymonville **PL** office: Gdańsk

COSTWAY®

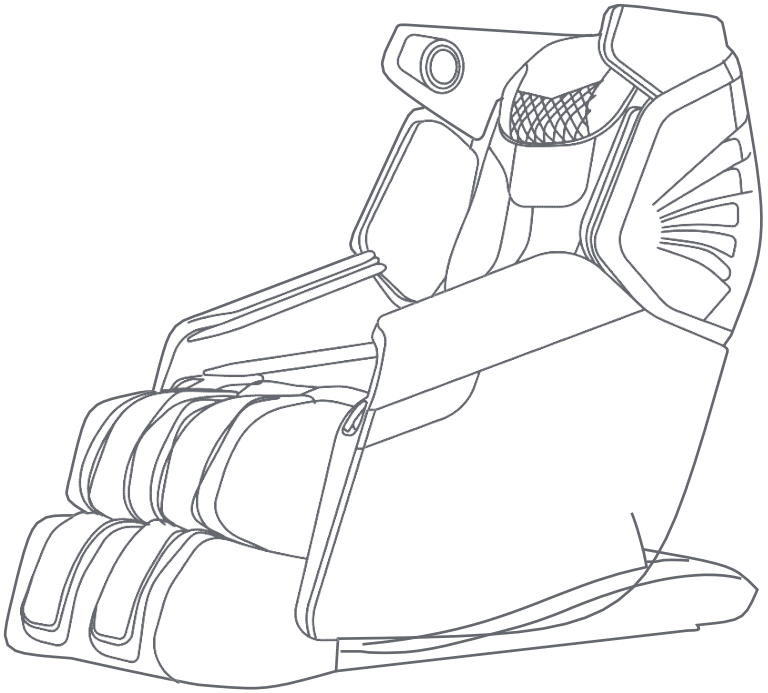

USER'S MANUAL

Massage Chair JL10021WL-BN

THIS INSTRUCTION BOOKLET CONTAINS **IMPORTANT** SAFETY INFORMATION. PLEASE READ AND KEEP FOR FUTURE REFERENCE.

This massager has been rigorously tested and confirmed to be safe and reliable. To ensure that you can use this massager correctly, please read this product manual carefully. Please keep it nearby so that you can read it at any time.

SAFETY PRECAUTIONS

1. People with the following conditions should consult their physician before using the product:

• Who uses a medical electronic device, which is embedded in the body, such as a pacemaker.

• Who suffers from heart disease.

• Who suffers from backbone disease.

• Who is suffering from bone fragility, especially on the backbone.

• After surgery.

• Who is pregnant, after delivery or in a period of monthly illness.

• Who suffers from malignant tumors.

• Who is suffering from osteoporosis.

• who is suffering from skin disease or affection.

• Who is undergoing medical treatment or feels some physical abnormality previously or is being treated now.

• Who has some abnormality or deformity of limbs or backbone.

• Who has backbone problems or injuries due to illness or accident.
Note: Never massage the swollen or inflamed parts of the body.

2. Do not let water enter the product or splash the surface of the product.

3. Water contact with electricity is dangerous. Do not leave the product in a humid environment (such as in bathroom or shower room or next to swimming pool).

4. Before connecting the product to the power supply, make sure the product voltage and supply voltage are the seam.

5. If the plug, power cord or product itself is damaged, do not use the product.

6. In order to prevent the risk of electric shock, do not open the product outer casing.

7. Product is not intended for use by the disabled, sensory or mental impaired (including children), unless there is supervision or guidance by the people responsible for their safety when they use the product.

8. If the product or the power cord is damaged, in order to avoid danger, do not try to repair the product. This must be handled by specialist/technician.

9. Children should not use the product. They should be under supervision to ensure that they will not treat the product as a toy.

10.If unusual sound or noise is being heard from the product, turn off the product and immediately disconnect the power connection. Please contact us.

11. Do not use the product if cover is damaged or if there is a mechanical or electronic failure. You should contact us.

12. Only place the product in accordance with the instructions in this user manual.

13. Do not use the product in humid conditions and high temperature environment or beside hot objects such as heaters, stoves.

14.Do not apply medical or cosmetic cream on the product or on your body before or when using the product.

15. When massaging around or near the neck, take care of the movement of rollers and refrain from using excessive intensity.

16. Do not destroy, bend, stretch, twist or tie the power cord. Damaged power cord can cause fire or electric shock.

17. Do not use the product on bare skin.

18. Recommended usage time for an individual is within 30 minutes a day.

19. The maximum capacity is 220lbs. If it is over 220lbs, permanent damage to the product would be resulted.

20. Always keep the product clean and never insert any object into the gaps on and around the product.

21. The product is designed for household use only.

22. Do not stand, sit or jump on the calf-rest when the product is in use to prevent any injury or damage. 23. Do not attempt to stand on the backrest and armrest to prevent any injury to person.

Warning:

• Who should avoid using this product: those who are physically, sensory, or mentally impaired, or who lack experience and knowledge. Unless they are supervised or directed by the person responsible for their safety regarding the use of this product.

• Children should be supervised to ensure that they cannot play with the massage chair.

• If the power cord is damaged, it must be replaced with a dedicated cord or a special component purchased from its manufacturer or service department.

• The surface of the appliance is hot, and people who are not sensitive to heat must use caution.

PRODUCT DESCRIPTION

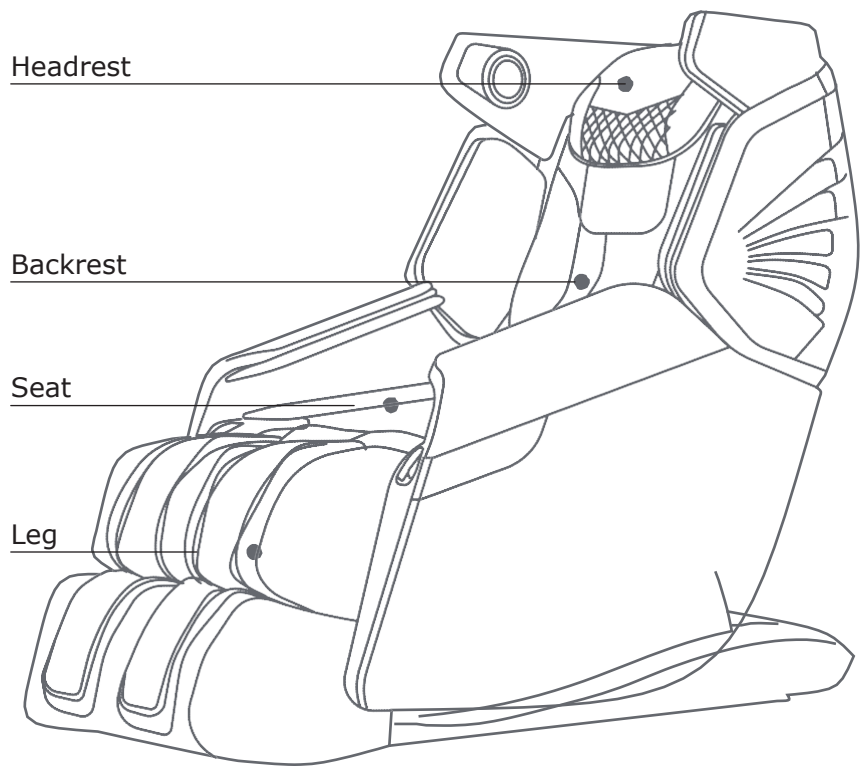

Massage chair movement

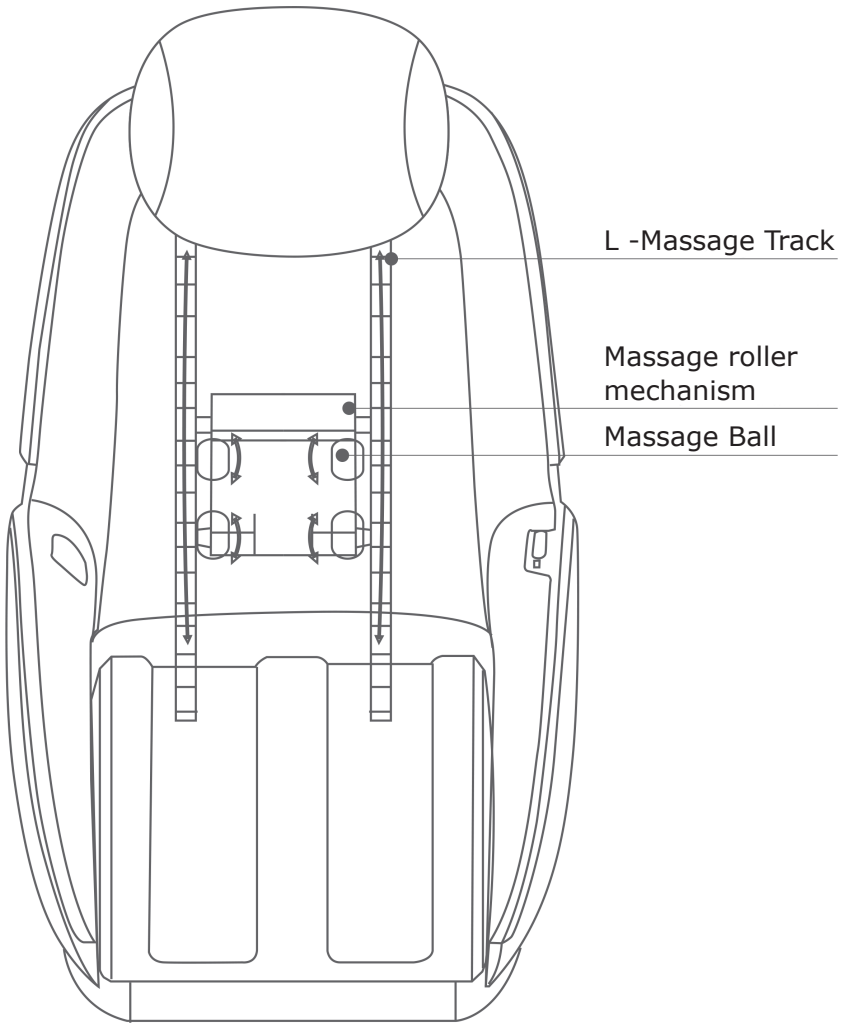

Rear View

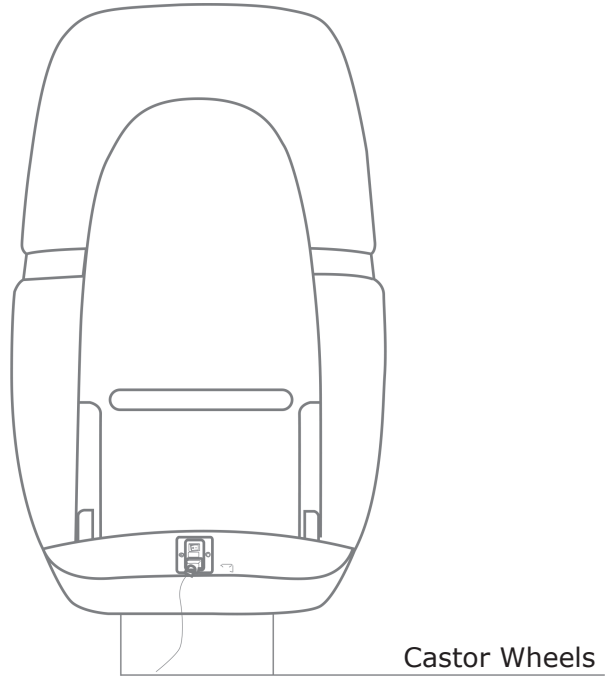

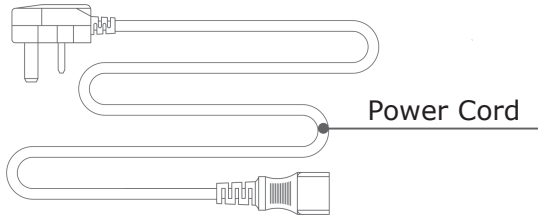

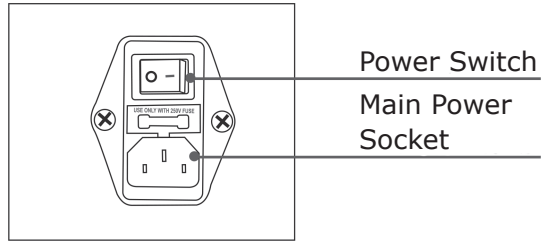

PREPARATION FOR USE

1)Remove the carton.Take out the chair.

2)Install the pillow and backrest cover.

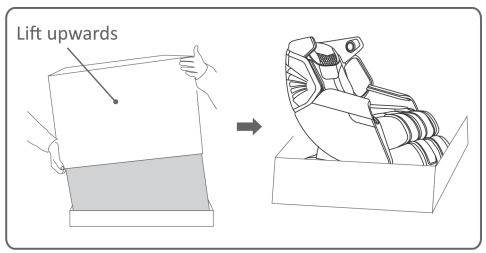

2. Place the chair in an open area

• Allow sufficient space around the chair for reclining purposes.

• To avoid damage to the floor and to reduce noise, please put a rug under the chair.

• Make sure that there is no barrier at the front and the back of the chair.

• Please do not put the chair on wet or uneven floor.

• To avoid signal interference, please place the chair 3.3 feet away from TV and radio.

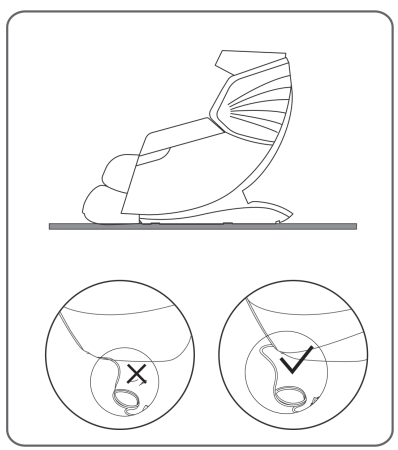

Warning:

Do not put the power cord under the chair! Beware of damaging the power cord while moving the chair!

3. Move the chair

1) As illustrated, push the backrest downwards and tilt chair on to its wheels at a 45° angle.

2) Slowly push and move the chair to the desired location.

3) Lower the chair slowly and smoothly until it is fully flat on the ground.

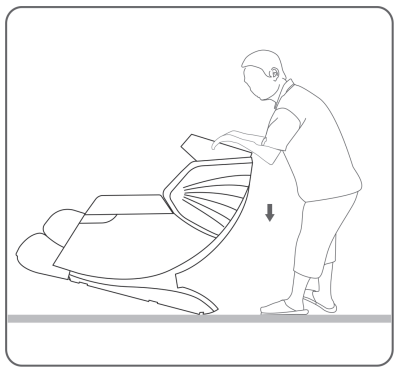

Warning:

• Do not move the chair when occupied or in use.

• Moving the chair may cause damage to the floor. Floor protection is recommended (e.g. rugs or carpet).

• Do not drop or suddenly let go of the chair when moving as it may damage the chair.

• Two persons are recommended when moving the chair and extra care is required.

REMOTE CONTROLLER

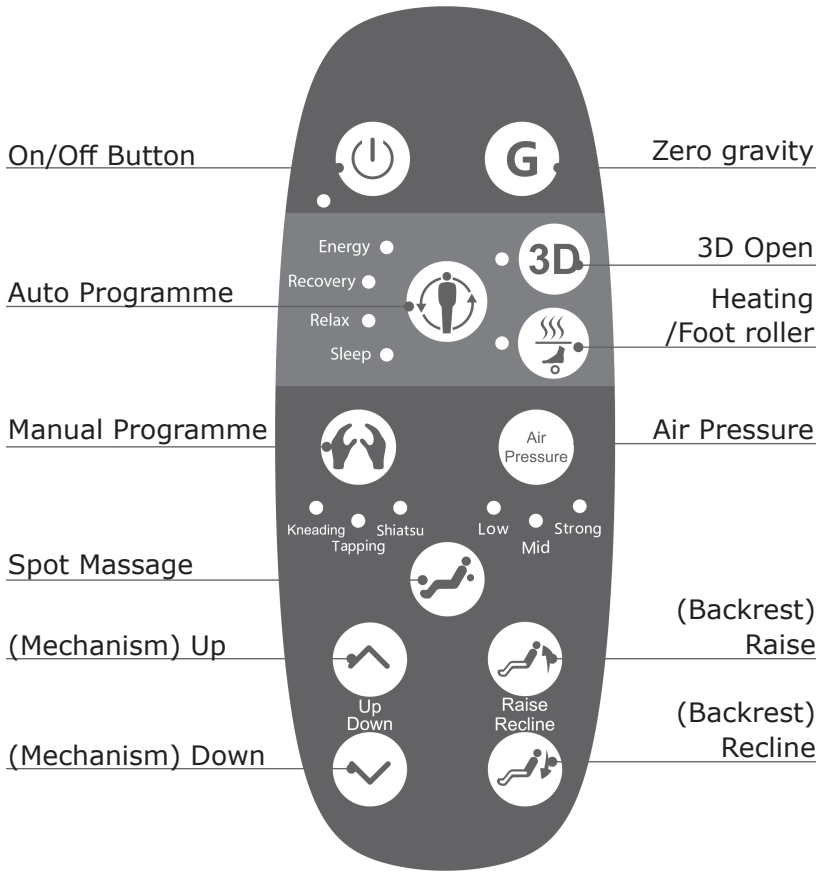

On/Off Button

Press once to enter standby mode. Press the button again to stop current massage function and return to standby mode.

Zero gravity mode

Press this key, similar to space zero gravity state, let the body in a natural and comfortable state, release physical and mental pressure.

Auto Programme

Press this button to choose from 4 Auto Programmes: Energy, Recovery, Relax and Sleep.

3D Open

Enable/disable the 3D massage function.

Heating/Foot roller

Short press: Turn on/off the Foot roller function.
Long press: Turn on/off the Heating function.

Manual Programme

Press this button to select from 3 manual programmes: Kneading, Tapping and Shiatsu. By pressing this button again, the programme will be disabled.

Air Pressure

Air Pressure: weak, medium and strong three adjustable massage modes.

Spot Massage

Spot massage can be selected when needed. This function is applicable to manual programme.

(Mechanism) Up / Down

Press and hold this button to adjust the up / down of the massage mechanism during spot massage.

(Backrest) Raise / Recline

Press this button to raise or recline the backrest. Press again to stop.

2. After use

1) Press the On/Off button to disable all functions before putting the remote controller into the controller pocket.

2) Turn off the power switch (to "O") located at the back of the chair.

3) Remove plug from power socket.

• Please do not pull on the power cord to remove the plug.

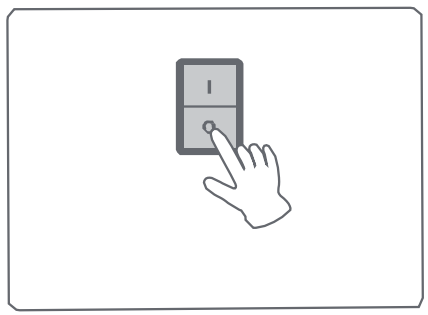

TROUBLE - SHOOTING

This page summarises the most common problems you would encounter with the product.

If you are unable to solve the problem with information below, please contact us immediately.

Problem	Possible Cause	Suggestion
The product does not work	The product is not plugged in properly.	Ensure the voltage on the product corresponds to the local mains voltage and then plug in again. Then press on the power switch.
The product does not work	The product has just finished its 15-min auto timer session and has automatically switched to standby mode.	If you want another session, press the On/Off button again.
	You may have used the product continuously for more than 45 minutes and the overheat protection has been activated.	Unplug the product and let it cool down for 60 minutes before you use it again.
	An excessive load has been applied on the product.	Reduce the excess and start again.
The product is abnormally warm	The product is likely to be overused.	Unplug the product and let it cool down before using it again.
Noise can be heard from the product	Noise is made by the mechanical parts of the product.	This is normal and does not mean that the product is faulty.

CARE & MAINTENANCE

Cleaning

1. Do not use steel wool, abrasive cleaning agents or corrosive liquids (such as gasoline or acetone) to clean the product.

2. Unplug the plug from the power socket.

3. Wipe with a dry cloth to clean the chair, remote controller and power cord.

4. Do not use a damp cloth or detergent.

1. Unplug the plug from the power socket.

2. Store the product in a cool dry place away from sunlight.

3. Do not put a heavy weight load on the product.

If the cover is damaged or there is any mechanical failure, please stop using the product. Contact us immediately.

PRODUCT SPECIFICATIONS

Project Name	Specification Description
Name of Product	Massage Chair
Type of Product	JL10021WL-BN
Power Input	120V, 60Hz
Power Consumption	100w
Box Dimension	1188(L)x828(W)x1175(H)mm
Net / Gross Weight	156LBS/201LBS

FCC Warning Statement

Changes or modifications not expressly approved by the party responsible for compliance could void the user's authority to operate the equipment. This equipment has been tested and found to comply with the limits for a Class B digital device, pursuant to Part 15 of the FCC Rules. These limits are designed to provide reasonable protection against harmful interference in a residential installation. This equipment generates uses and can radiate radio frequency energy and, if not installed and used in accordance with the instructions, may cause harmful interference to radio communications. However, there is no guarantee that interference will not occur in a particular installation. If this equipment does cause harmful interference to radio or television reception, which can be determined by turning the equipment off and on, the user is encouraged to try to correct the interference by one or more of the following measures:

-- Reorient or relocate the receiving antenna.

-- Increase the separation between the equipment and receiver.

-- Connect the equipment into an outlet on a circuit different from that to which the receiver is connected.

-- Consult the dealer or an experienced radio/TV technician for help.