yazaki®

Logistics Solution

Option Unit for
CREFORM AGC Drive Unit

Wireless Intersection Module

FCU-RC01

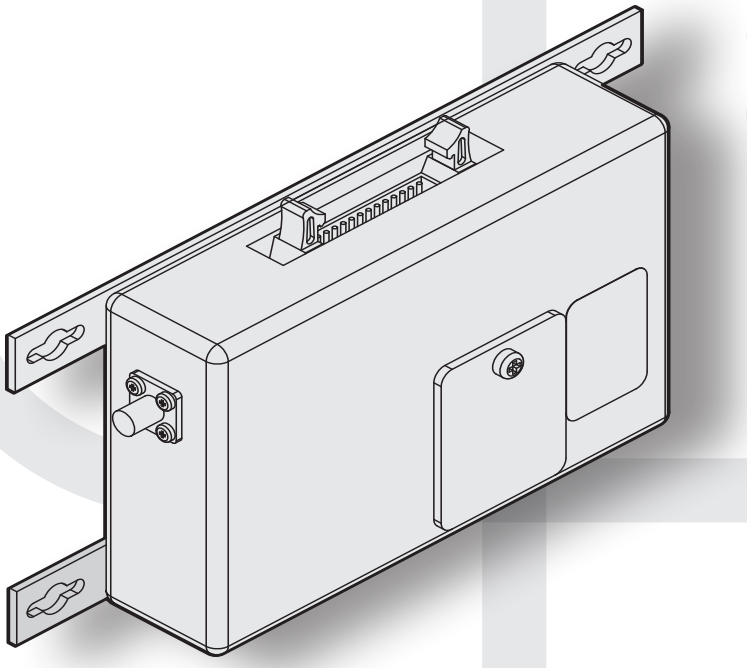

Contents

1 . About this instruction manual 4
➲ 1-1. Requirements for handling the manual 4
➲ 1-2. About symbols used in this manual 4
2 . About safety 5
3 . Overview of product 6
➲ 3-1. Software versions 6
➲ 3-2. About the wireless module 7
3-2-1. Features of the wireless module 7
3-2-2. Overview of the wireless module 8
4 . Accessories 8
➲ 4-1. Checklist 8
5 . Specifications 9
➲ 5-1. Specification table 9
6 . Part names and functions 10
➲ 6-1. Part names 10
➲ 6-2. Functions 10
6-2-1. Switches 10
6-2-2. Display 10
6-2-3. Antenna connection section 10
6-2-4. CN1 power connector 10
6-2-5. CN2 input/output connector 11
6-2-6. CN3 connector for parameter settings 11
➲ 6-3. Details of switches 12
6-3-1. DIP switch (SW1) 12
6-3-2. Rotary switches (RSW1 to 4) 13
➲ 6-4. Details of CN2 input/output 14
6-4-1. Input/output signals in the address sensor mode 15
6-4-2. Input/output signals in the RFID mode 16
6-4-3. Input/output signals in the ground station mode 17
6-4-4. Input/output signals in the external control mode 18
➲ 6-5. Details of display 19
7 . About related components 22
➲ 7-1. Wireless intersection module box FCP-RCB01-24 22
7-1-1. CN1 22
7-1-2. CN2 22
7-1-3. CN3 23
7-1-4. CN4 23
➲ 7-2. Wireless intersection module box FCP-RCB01-12 24
7-2-1. CN1 24
7-2-2. CN2 25
7-2-3. CN3 25
7-2-4. CN4 25
➲ 7-3. Pencil type antenna FCP-RCA01 26
➲ 7-4. Flanged antenna with bracket FCP-RCA02 26
➲ 7-5. Address sensor with bracket FCP-RCS01 27
7-5-1. Specifications 27
➲ 7-6. RFID antenna with bracket FCP-RCS02 27
7-6-1. Specifications 27
➲ 7-7. Address sensor with bracket for small Drive Unit FCP-RCS03 28
7-7-1. Specifications 28
➲ 7-8. RFID antenna with bracket for small Drive Unit FCP-RCS04 28
7-8-1. Specifications 28
➲ 7-9. Cable for 24 V Drive Unit FCP-RCC01-24 29
➲ 7-10. Cable for 12V Drive Unit FCP-RCC01-12 30
➲ 7-11. Cable for course 30 FCP-RCC02 31
➲ 7-12. Cable for small Drive Unit FCP-RCC03 32
➲ 7-13. Cable for address sensor FCP-RCC04 32
➲ 7-14. Cable for RFID antenna FCP-RCC05 33
➲ 7-15. Wireless intersection module setting cable FCP-RCC08 33
➲ 7-16. Address magnetic plate FCP-SMG01-* 34
7-16-1. Specifications 34
➲ 7-17. ID tag FCP-TAG01 35
7-17-1. Specifications 35
➲ 7-18. Wireless intersection module mounting bracket FCU-RCK06 36
➲ 7-19. Wireless intersection module mounting bracket FCU-RCK07 36
➲ 7-20. AC adapter FCP-RCP01 36
8 . Installation and connections 37
➲ 8-1. About installation place 37
➲ 8-2. About installation 39
8-2-1. Wireless Intersection Module 39
➲ 8-3. Connections and settings 41
8-3-1. Intersection is instructed by the address sensor when the 24 V forward type Drive Unit is used 41
8-3-2. Intersection is instructed by the RFID antenna when the 24 V forward type Drive Unit is used 42
8-3-3. Intersection is instructed by the course 30 unit when the 24 V forward type Drive Unit is used 43
8-3-4. Intersection is not instructed by the course 30 unit, but it is instructed by the address sensor when the 24 V forward type Drive Unit is used 44
8-3-5. Intersection is not instructed by the course 30 unit, but it is instructed by the RFID antenna when the 24 V forward type Drive Unit is used 45
8-3-6. Intersection is instructed by the course 30 unit when the 24 V forward/backward type Drive Unit is used 46
8-3-7. Intersection is not instructed by the course 30 unit, but it is instructed by the address sensor when the 24 V forward/backward type Drive Unit is used 47
8-3-8. Intersection is not instructed by the course 30 unit, but it is instructed by the RFID antenna when the 24 V forward/backward type Drive Unit is used 48
8-3-9. Intersection is instructed by the address sensor when the 12V forward type Drive Unit is used 49
8-3-10. Intersection is instructed by the RFID antenna when the 12V forward type Drive Unit is used 50
8-3-11. Intersection is instructed by the course 30 unit when the 12V forward type Drive Unit is used 51
8-3-12. Intersection is not instructed by the course 30 unit, but it is instructed by the address sensor when the 12V forward type Drive Unit is used 52
8-3-13. Intersection is not instructed by the course 30 unit, but it is instructed by the RFID antenna when the 12V forward type Drive Unit is used 53
8-3-14. Intersection is instructed by the course 30 unit when the 12V forward/backward type Drive Unit is used 54
8-3-15. Intersection is not instructed by the course 30 unit, but it is instructed by the address sensor when the 12V forward/backward type Drive Unit is used 55
8-3-16. Intersection is not instructed by the course 30 unit, but it is instructed by the RFID antenna when the 12V forward/backward type Drive Unit is used 56
8-3-17. Intersection is instructed by the address sensor when the small Drive Unit is used 57
8-3-18. Intersection is instructed by the RFID antenna when the small Drive Unit is used 58
8-3-19. Intersection control is performed using the ground station 59
9 . Intersection 60
➲ 9-1. For address sensor 60
9-1-1. Layout of address magnetic plate 60
9-1-2. Installation of address sensor 60
9-1-3. Detection direction of address sensor 61
9-1-4. About installation of address magnetic plate 61
9-1-5. Forward type 62
9-1-6. Forward/backward type 63
9-1-7. Timing chart 64
➲ 9-2. For RFID antenna 65
9-2-1. Layout of ID tag 65
9-2-2. Installation of RFID antenna 65
9-2-3. Forward type 66
9-2-4. Forward/backward type 67
9-2-5. Timing chart 68
➲ 9-3. For course 30 unit 69
9-3-1. Forward type 69
9-3-2. Forward/backward type 70

9-3-3. Timing chart 72
➲ 9-4. For ground station 72
10. Wireless intersection module parameter settings 73
➲ 10-1. FCU-RC01 setup software FCU-RC01_Set 73
10-1-1. Operating conditions for FCU-RC01 setup software 73
10-1-2. Basic screen, and part names and functions 74
10-1-3. Connection and disconnection procedures 78
➲ 10-2. ID setting 79
10-2-1. Setting example 79
➲ 10-3. One shot pulse width setting 79
10-3-1. Setting example 79
➲ 10-4. Stop-Start delay setting 80
10-4-1. Setting example 80
➲ 10-5. Frequency CH setting 81
10-5-1. Setting example 81
➲ 10-6. Travel priority setting 82
10-6-1. Setting example 82
10-6-2. Address sensor mode 83
10-6-3. Timing chart 83
10-6-4. RFID mode 84
10-6-5. Timing chart 85
➲ 10-7. Ground station setting 85
10-7-1. Setting example 1 85
10-7-2. Setting example 2 86
10-7-3. Setting example 3 87
10-7-4. Setting example 4 88
10-7-5. Caution 89
➲ 10-8. Trigger setting 90
10-8-1. Setting example 90
10-8-2. Timing chart 91
➲ 10-9. Intersection operation setting 92
10-9-1. Setting example 92
➲ 10-10. Initialization 93
10-10-1. Procedures 93
➲ 10-11. Load or Save settings 94
10-11-1. Settings saving procedures 94
10-11-2. Settings loading procedures 95
11. External control mode 96
➲ 11-1. Settings 96
11-1-1. Wiring 96
➧ 11-1-1-1. Power supply 96
➧ 11-1-1-2. Input/output 97
11-1-2. Wiring example 98
11-1-3. Flow of control 99
➧ 11-1-3-1. AGV (1) passes through the intersection and AGV (2) waits. 99
➧ 11-1-3-2. AGV (3) waits while AGV (1) is passing and AGV (2) is waiting. 100
➧ 11-1-3-3. AGV (2) waits with the intersection top priority input turned ON while AGV (1) is passing and AGV (3) is waiting. 101
➧ 11-1-3-4. AGV (1) passes through the intersection, AGV (2) waits, and SW1-4 of each wireless intersection module is turned ON. 102
➧ 11-1-3-5. AGV (1) passes through the intersection, AGV (2) waits, and SW1-5 of each wireless intersection module is turned ON. 102
12. Caution 103
13. Contents of warranty 103
➲ 13-1. Warranty period 103
➲ 13-2. Warranty coverage 103
14. Others 104
➲ 14-1. Precautions 104
➲ 14-2. Contacts 104

1. About this instruction manual

This instruction manual is prepared to control and use the wireless intersection module, that is an optional unit for the Drive Unit, in a correct and safe manner and fully utilize its functions. This manual primarily describes the methods of handling the wireless intersection module. For details about the Drive Unit main body, refer to the instruction manual supplied with the Drive Unit.

1-1. Requirements for handling the manual

The instruction manual is a “part of the product” necessary to use the product. To operate the product in a safe and correct manner, thoroughly read this instruction manual to fully understand its contents and strictly observe its guidance when operating the product. In addition, after reading the instruction manual, carefully store it in a safe place for the period of appropriate time for future reference. Update the manual as newly revised documents are delivered and dispose of the previous versions.

1-2. About symbols used in this manual

To help users’ understanding, this manual uses two kinds of symbols in the main body of the document to describe important points and supplemental contents.

Indicates contents where one must pay attention in the main body of the document.

Indicates useful information and provides operating tips.

To warn the users and prevent hazards, the following indications are provided to indicate possible hazards leading to personal injury or damage to the equipment.

WARNING: This denotes immediate hazards which will result in death or severe personal injury, if not avoided.

In addition, to prevent hazards, the following graphic warning symbols are used for safety-related items.

Prohibited action symbols

The actions are prohibited when the product is being operated. The action may be overlapped with the graphic symbols to show the prohibition of more specific contents.

Example: Fire is prohibited. Example: Touching is prohibited.

Alert symbols

The symbols show the conditions under which special attention is required such as ignition hazard or high temperature when the product is being operated. The action may be overlapped with the graphic symbol to alert the user to more specific contents.

Example: General alert Example: Corrosion alert

Action instruction symbols

The symbols are added when action is required in accordance with the instructions when the product is being operated. The symbol illustrating the contents may be combined
to further show the contents of the instruction.

Example: General instruction or action request Example: Grounding instruction

2. About safety

Strictly observe the following safety precautions to prevent operating problems or malfunction of this product.

⚠CAUTION

Do not install the antenna in a place surrounded by metallic members.

Install the antenna 200 mm or more away from the floor.

Do not apply any shock to the antenna.

Do not pull or bend the cable or cord forcibly.

Install the antennas at the highest possible positions where the antennas can be seen together.

Install the antenna so that it is not parallel to cables or metallic plates.

Install the antenna away from any cable, metallic plates, concrete, plasterboard, lumber, and wall surfaces as much as possible (300 mm or more).

Install the antennas of the different wireless units 2 m or more away from each other.

When installing the antenna, adjust the antenna direction.

Set the ID of the wireless intersection module so that it is not duplicated. Do not use duplicate IDs.

Set the ID to 900 to 999 in the ground station mode.

An incorrect approach may occur depending on the communication status. Widen the range of the obstacle sensor as much as possible inside the intersection.

Use the wireless intersection modules with the same software version in the same system.

The wireless intersection modules with different software versions cannot be used.

Do not modify this product.

This product is intended for indoor use only.

Be sure to handle the product under the conditions defined in the specifications.

3. Overview of product

This product is a wireless module that communicates in the 2.4 GHz band.

3-1. Software versions

This instruction manual supports the following software versions or later.

FCU-RC01 main unit software version	App_v1.10.22
FCU-RC01 setup software version	Ver. 0.1.9

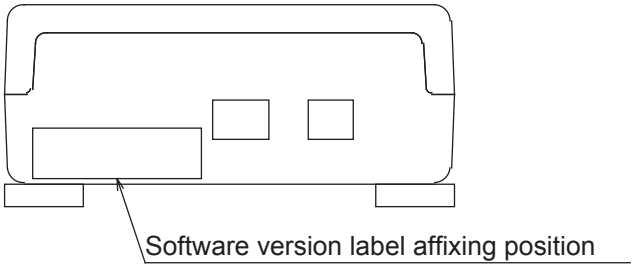

3-2. About the wireless module

3-2-1. Features of the wireless module

Easy intersection control

The wireless units communicate with each other to determine whether passing through the intersection is possible or not. Therefore, the AGV does not need to perform the intersection control.

Multiple operation modes

The address sensor mode, RFID mode, ground station mode, and external control mode are available as operation modes.

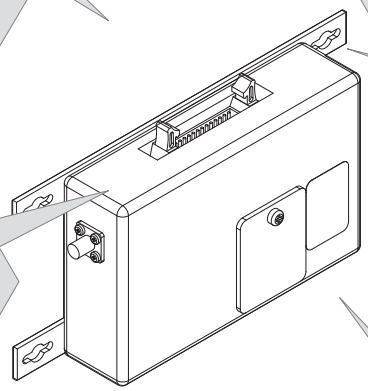

Antenna selection

You can select a pencil type antenna or flanged antenna depending on the application.

Radio frequency channel change

You can select a radio frequency from 15 channels. An optimal frequency band without interference can be easily selected.

Easy installation

The wireless intersection module can be installed on a Creform pipe using the wireless intersection module box or wireless intersection module mounting bracket.

Wireless communication distance

The wireless communication distance may vary depending on the installation location (environment). The following distance is used as a guide.

- Indoor placement with good visibility, About 15 m (Environment in which the antennas can be seen together and are installed at high positions, and there are no obstacles around the antennas.) Note: Field research is needed.

3-2-2. Overview of the wireless module

• The wireless module units communicate with each other to perform the intersection control.

• Instructions regarding the entrance and exit of the intersection are sent to the wireless intersection modules by the address sensor, RFID antenna, course 30 unit, and external unit that sends various output signals. In addition, the wireless intersection modules installed on the AGVs communicate with each other to determine whether passing through the intersection is possible or not.

> ! Basically, the order of passing through the intersection is set in the order of arrivals.

• If the communication status is unstable due to a long distance of wireless communication or due to effects of obstacles caused by the layout, install the wireless intersection module on the ground and use it in the ground station mode. The radio wave then easily reaches and avoids the effects caused by obstructions.

> ! One ground station can control four intersections.

• You can select the intersection control by connecting signals from the wireless intersection modules installed on the AGVs with each other or the intersection control by sending inquiries to the ground station for each intersection address.

> ! For the intersection control by setting the wireless intersection modules to communicate with each other, up to eight wireless intersection modules can be used for one intersection. (Total number of units that are passing through the intersection and units that are waiting at the same time. For example, one unit is passing and seven units are waiting at the same time.) In addition, when the intersection control is performed using the ground station, one ground station can control up to four intersections.

4. Accessories

4-1. Checklist

Use the checklist to check the contents of the product package you have received.

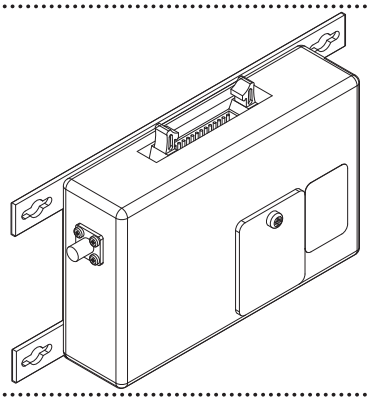	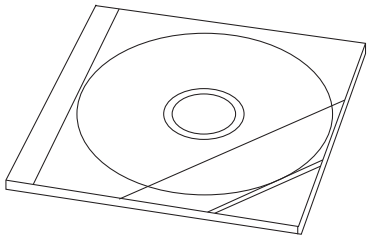
Wireless Intersection Module FCU-RC01	This instruction manual and parameter setup software “FCU-RC01_Set”
1 unit	1 pc. (CD-ROM)
□	□

Note: When multiple units are ordered, one CD-ROM is supplied with one set.

5. Specifications

5-1. Specification table

Product name		Wireless Intersection Module
Model number		FCU-RC01
Rated power supply voltage		24 V DC±10%
Power consumption		6 W or less
Body size		80 × 171 × 32 mm (excluding protrusions)
Weight		235 g
Environment specifications	Operating temperature	-10 to 50ºC (No dew condensation or freezing allowed.)
	Operating humidity	0 to 90% RH (No dew condensation allowed.)
Radio frequency band		2.4 GHz, 2405 to 2475 MHz
Input circuit	Applied voltage	24 V DC
	Rated current	10 mA
Output circuit	Rated current	50 mA
Intersection control using modules	Number of control units	Up to eight units for one intersection. One unit is passing and seven units are waiting.
Intersection control using ground station	One ground station Number of intersections	Up to four intersections
	One ground station Number of control units	For one intersection, one unit is passing through one intersection and seven units are waiting. For two intersections, one unit is passing through one intersection and seven units are waiting. For three intersections, one unit is passing through one intersection and four units are waiting. For four intersections, one unit is passing through one intersection and three units are waiting.

6. Part names and functions

6-1. Part names

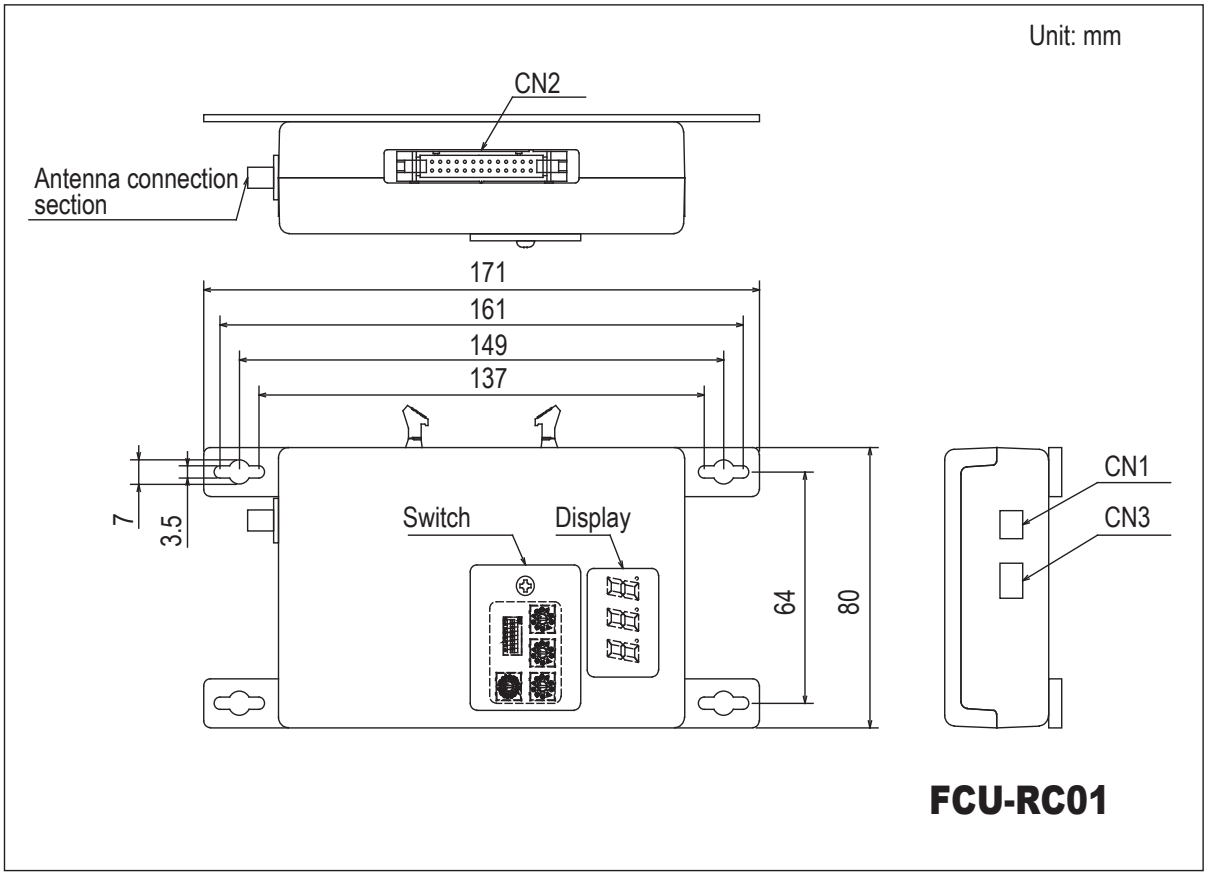

6-2. Functions

6-2-1. Switches

When you loosen the screw that secures the switch cover and slide it, you can operate the DIP switches and the rotary switches for setting the wireless intersection module.

6-2-2. Display

A 3-digit and 7-segment display indicates the status of the wireless intersection module.

6-2-3. Antenna connection section

Connect the antenna.

6-2-4. CN1 power connector

Connector	S2B-XH-A connector for printed circuit board (JST)
Fitting connector	XHP-2 connector for printed circuit board (JST)

Pin number	Contents
1	+24 V
2	GND

6-2-5. CN2 input/output connector

Connector	MIL connector 26-core, male
Fitting connector	MIL connector 26-core, female

Pin number	Contents	Remarks
1	OUT1	The input/output is switched using the operation mode setting of the DIP switch (SW1).
2	OUT2	
3	OUT3	
4	OUT4	
5	OUT5	
6	OUT6	
7	IN1	
8	IN2	
9	IN3	
10	IN4	
11	IN5	
12	IN6	
13	IN7	
14	IN8	
15	IN9	
16	IN10	
17	IN11	
18	IN12	
19	IN13	
20	+24 V	Do not use these pins for supplying the power to an external device.
21	+24 V	
22	GND	
23	GND	
24	TxD	Dedicated for the RFID mode.
25	RxD	Dedicated for the RFID mode.
26	SGND	Dedicated for the RFID mode.

6-2-6. CN3 connector for parameter settings

This connector is used for the parameter settings of the wireless intersection module.

6-3. Details of switches

When the settings of the switches (DIP switch and rotary switches) are changed, the settings take effect by turning OFF the power and turning it ON again. Be sure to turn OFF the power, and then turn it ON again after changing the settings.

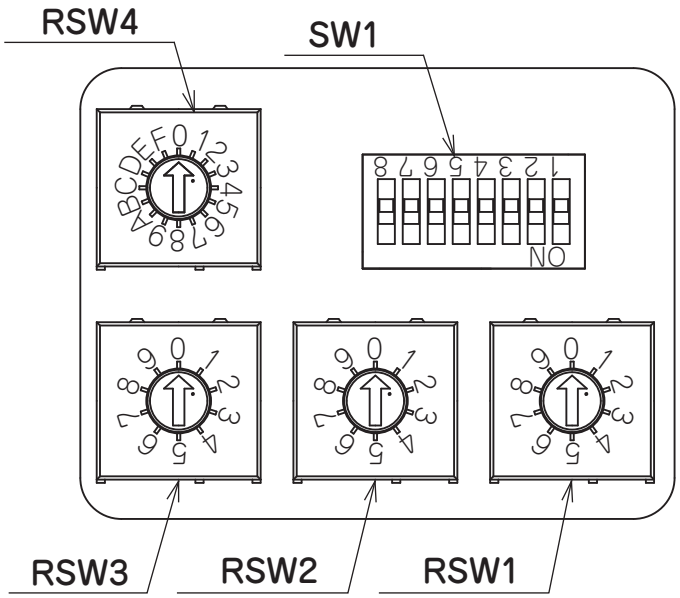

6-3-1. DIP switch (SW1)

<table>
<tr><th>No.</th><th>Contents</th><th>Details</th><th>Setting at shipment</th></tr>
<tr><td>1</td><td rowspan="3">Operation mode settings</td><td rowspan="3"><table><tr><th>No. 3</th><th>No. 2</th><th>No. 1</th><th>Operation mode</th></tr><tr><td>OFF</td><td>OFF</td><td>OFF</td><td>Address sensor</td></tr><tr><td>OFF</td><td>OFF</td><td>ON</td><td>RFID</td></tr><tr><td>OFF</td><td>ON</td><td>OFF</td><td>Ground station</td></tr><tr><td>OFF</td><td>ON</td><td>ON</td><td>External control</td></tr></table></td><td>OFF</td></tr>
<tr><td>2</td><td>OFF</td></tr>
<tr><td>3</td><td>OFF</td></tr>
<tr><td>4</td><td>Start signal</td><td>In the external control mode
OFF: Level output
ON: One shot output</td><td>OFF</td></tr>
<tr><td>5</td><td>Stop signal</td><td>In the external control mode
OFF: Level output
ON: One shot output</td><td>OFF</td></tr>
<tr><td>6</td><td>PC setting</td><td>ID and frequency CH settings using the FCU-RC01 setup software are enabled.</td><td>OFF</td></tr>
<tr><td>7</td><td rowspan="2">For maintenance</td><td rowspan="2">Setting is disabled.</td><td>OFF</td></tr>
<tr><td>8</td><td>OFF</td></tr>
</table>

6-3-2. Rotary switches (RSW1 to 4)

<table>
<tr><th>No.</th><th>Contents</th><th>Details</th><th>Setting at shipment</th></tr>
<tr><td>1</td><td rowspan="3">ID setting</td><td rowspan="3"><table><tr><th>No. 3</th><th>No. 2</th><th>No. 1</th></tr><tr><td>Hundreds digit</td><td>Tens digit</td><td>Ones digit</td></tr></table>• Set the ID of the wireless intersection module.
• The setting range of the wireless intersection module to be installed on the AGV is 001 to 899.
• The setting range is 900 to 999 in the ground station mode.
• It is necessary to assign each wireless intersection module a unique ID that is not duplicated.
• When the settings of RSW1 to 3 are 0, the ID setting using the FCU-RC01 setup software is enabled.</td><td>1</td></tr>
<tr><td>2</td><td>0</td></tr>
<tr><td>3</td><td>0</td></tr>
<tr><td>4</td><td>Radio frequency setting</td><td><table><tr><th>No. 4</th><th>Frequency</th><th>Channel</th></tr><tr><td>0</td><td>–</td><td>PC setting</td></tr><tr><td>1</td><td>2405 MHz</td><td>1</td></tr><tr><td>2</td><td>2410 MHz</td><td>2</td></tr><tr><td>3</td><td>2415 MHz</td><td>3</td></tr><tr><td>4</td><td>2420 MHz</td><td>4</td></tr><tr><td>5</td><td>2425 MHz</td><td>5</td></tr><tr><td>6</td><td>2430 MHz</td><td>6</td></tr><tr><td>7</td><td>2435 MHz</td><td>7</td></tr><tr><td>8</td><td>2440 MHz</td><td>8</td></tr><tr><td>9</td><td>2445 MHz</td><td>9</td></tr><tr><td>A</td><td>2450 MHz</td><td>10</td></tr><tr><td>B</td><td>2455 MHz</td><td>11</td></tr><tr><td>C</td><td>2460 MHz</td><td>12</td></tr><tr><td>D</td><td>2465 MHz</td><td>13</td></tr><tr><td>E</td><td>2470 MHz</td><td>14</td></tr><tr><td>F</td><td>2475 MHz</td><td>15</td></tr></table>• When the setting of RSW4 is 0, the frequency CH setting using the FCU-RC01 setup software is enabled.</td><td>F</td></tr>
</table>

6-4. Details of CN2 input/output

The input/output of CN2 is switched using the operation mode setting of the DIP switch (SW1).

Signal	Address sensor mode	RFID mode	Ground station mode	External control mode
OUT1	Start	Start	Battery voltage drop	Start
OUT2	Stop	Stop	AGV error	Stop
OUT3	-	-	-	-
OUT4	-	-	Normal (wireless unit)	Normal (wireless unit)
OUT5	Passing	Passing	Passing	Passing
OUT6	Pause	Pause	AGV arrival	-
IN1	Intersection address (1)	-	Start permission 1	Intersection address (1)
IN2	Intersection address (2)	-	Start permission 2	Intersection address (2)
IN3	Intersection address (4)	-	Start permission 3	Intersection address (4)
IN4	Intersection address (8)	-	Start permission 4	Intersection address (8)
IN5	Intersection address (16)	-	Start permission 5	Intersection address (16)
IN6	Intersection address (32)	-	Start permission 6	Intersection address (32)
IN7	Intersection address (64)	-	Start permission 7	Intersection address (64)
IN8	AGV error	AGV error	-	AGV error
IN9	Read timing	-	-	Intersection inquiry
IN10	AGV arrival	AGV arrival	-	AGV arrival
IN11	-	-	-	Intersection top priority
IN12	Battery voltage drop	Battery voltage drop	-	Battery voltage drop
IN13	Reset	Reset	Reset	Reset

6-4-1. Input/output signals in the address sensor mode

Contents	Signal	Description
OUT1	Start	This signal is output to start the AGV that is waiting at the intersection.
OUT2	Stop	This signal is output to stop the AGV at the intersection.
OUT3	-	-
OUT4	-	-
OUT5	Passing	This signal is output while the AGV is passing through the intersection.
OUT6	Pause	Inputting the pause signal to the AGV performs the intersection control with the travel priority. For details, see “10-6 Travel priority setting”.
IN1	Intersection address (1)	Instructs the intersection address.
IN2	Intersection address (2)	
IN3	Intersection address (4)	
IN4	Intersection address (8)	
IN5	Intersection address (16)	
IN6	Intersection address (32)	
IN7	Intersection address (64)	
IN8	AGV error	This signal is used by connecting the error output from the AGV. When the input of the wireless intersection module that is passing through the intersection turns ON during communication with the ground station, OUT2 of the ground station turns ON.
IN9	Read timing	This signal is output in one shot 10 ms after the output to instruct the intersection address has been sent from the address sensor.
IN10	AGV arrival	This signal is used by connecting the arrival output from the AGV. When the input of the wireless intersection module that is passing through the intersection turns ON during communication with the ground station, OUT6 of the ground station turns ON.
IN11	-	-
IN12	Battery voltage drop	This signal is used by connecting the battery voltage drop output from the AGV. When the input of the wireless intersection module that is passing through the intersection turns ON during communication with the ground station, OUT1 of the ground station turns ON.
IN13	Reset	This signal resets the intersection information.

6-4-2. Input/output signals in the RFID mode

Contents	Signal	Description
OUT1	Start	This signal is output to start the AGV that is waiting at the intersection.
OUT2	Stop	This signal is output to stop the AGV at the intersection.
OUT3	-	-
OUT4	-	-
OUT5	Passing	This signal is output while the AGV is passing through the intersection.
OUT6	Pause	Inputting the pause signal to the AGV performs the intersection control with the travel priority. For details, see “10-6 Travel priority setting”.
IN1	-	-
IN2	-	-
IN3	-	-
IN4	-	-
IN5	-	-
IN6	-	-
IN7	-	-
IN8	AGV error	This signal is used by connecting the error output from the AGV. When the input of the wireless intersection module that is passing through the intersection turns ON during communication with the ground station, OUT2 of the ground station turns ON.
IN9	-	-
IN10	AGV arrival	This signal is used by connecting the arrival output from the AGV. When the input of the wireless intersection module that is passing through the intersection turns ON during communication with the ground station, OUT6 of the ground station turns ON.
IN11	-	-
IN12	Battery voltage drop	This signal is used by connecting the battery voltage drop output from the AGV. When the input of the wireless intersection module that is passing through the intersection turns ON during communication with the ground station, OUT1 of the ground station turns ON.
IN13	Reset	This signal resets the intersection information.

6-4-3. Input/output signals in the ground station mode

Contents	Signal	Description
OUT1	Battery voltage drop	This signal is output when IN12 of the wireless intersection module installed on the AGV that is passing through the intersection turns ON during communication with the wireless intersection module in the ground station mode. The battery voltage drop output of the AGV needs to be connected to IN12.
OUT2	AGV error	This signal is output when IN8 of the wireless intersection module installed on the AGV that is passing through the intersection turns ON during communication with the wireless intersection module in the ground station mode. The error output of the AGV needs to be connected to IN8.
OUT3	-	-
OUT4	Normal	The output turns OFF if an error occurs in the wireless unit.
OUT5	Passing	This signal is output when the wireless intersection module installed on the AGV that is passing through the intersection during communication with the wireless intersection module in the ground station mode.
OUT6	AGV arrival	This signal is output when IN10 of the wireless intersection module installed on the AGV that is passing through the intersection turns ON during communication with the wireless intersection module in the ground station mode. The arrival output of the AGV needs to be connected to IN10.
IN1	Start permission 1	These signals become inputs to permit the approach to the intersection when the intersection control is performed using the ground station. To use these signals, set ON in “Trigger” and set a desired input IN1 to 7 in “Trigger IN No.” using the parameter settings of the FCU-RC01 setup software. For details, see “10-8 Trigger setting”.
IN2	Start permission 2	
IN3	Start permission 3	
IN4	Start permission 4	
IN5	Start permission 5	
IN6	Start permission 6	
IN7	Start permission 7	
IN8	-	-
IN9	-	-
IN10	-	-
IN11	-	-
IN12	-	-
IN13	Reset	This signal resets the intersection information.

6-4-4. Input/output signals in the external control mode

Contents	Signal	Description
OUT1	Start	This signal is output to start the AGV that is waiting at the intersection.
OUT2	Stop	This signal is output to stop the AGV at the intersection.
OUT3	-	-
OUT4	Normal	The output turns OFF if an error occurs in the wireless unit.
OUT5	Passing	This signal is output while the AGV is passing through the intersection.
OUT6	-	-
IN1	Intersection address (1)	Instructs the intersection address. 1 to 127 can be selected for the intersection address using decimal numbers.
IN2	Intersection address (2)	
IN3	Intersection address (4)	
IN4	Intersection address (8)	
IN5	Intersection address (16)	
IN6	Intersection address (32)	
IN7	Intersection address (64)	
IN8	AGV error	This signal is used by connecting the error output from the AGV. When the input of the wireless intersection module that is passing through the intersection turns ON during communication with the ground station, OUT2 of the ground station turns ON.
IN9	Intersection inquiry	Turning ON this signal after specifying the intersection address starts the intersection control. After that, turning OFF the signal completes passing through the intersection. Note: Do not turn ON this signal, intersection address input, or intersection top priority input at the same time. Be sure to turn ON this signal 100 ms or longer after turning ON the intersection address input and intersection top priority input.
IN10	AGV arrival	This signal is used by connecting the arrival output from the AGV. When the input of the wireless intersection module that is passing through the intersection turns ON during communication with the ground station, OUT6 of the ground station turns ON.
IN11	Intersection top priority	There is a waiting AGV with the intersection top priority input turned OFF at the intersection, and then an AGV with the intersection top priority input turned ON becomes waiting. In this case, when passing through the intersection is enabled, the AGV with the intersection top priority input turned ON passes through the intersection prior to the AGV that is waiting beforehand. It is necessary to turn ON this signal before the intersection inquiry input.
IN12	Battery voltage drop	This signal is used by connecting the battery voltage drop output from the AGV. When the input of the wireless intersection module that is passing through the intersection turns ON during communication with the ground station, OUT1 of the ground station turns ON.
IN13	Reset	This signal resets the intersection information.

6-5. Details of display

A 3-digit and 7-segment display indicates the status of the wireless intersection module.

1) Display at power ON

Order	Contents	Display	Example
1	Operation mode display	"--x" is displayed for 1 second. x: Operation mode number 0: Address sensor mode 1: RFID mode 2: Ground station mode 3: External control mode	Operation mode: External control mode
2	ID display	"xxx" is displayed for 1 second. xxx: ID set value	ID: 1
3	Frequency channel display	"Fxx" is displayed for 1 second. xx: Frequency channel set value Note: "F00" is displayed when the PC setting is enabled.	Frequency channel: 18

2) Normal display

Contents	Display	Example
Standby	“ 0” Note: Displayed in the standby status.	
Intersection detection	“xxx” ↔ “ ” Displayed for 0.5 second alternately. xxx: Intersection address Note: Displayed after the address magnetic plate or ID tag has been recognized in the address sensor mode or RFID mode.	Detection of intersection address 1
Waiting for intersection detection	“xxx” xxx: Intersection address Note: Displayed while waiting after the intersection has been recognized.	Intersection address 1
Passing through the intersection	“xxx.” xxx: Intersection address Note: Displayed when the intersection is recognized and the AGV is passing through the intersection.	Intersection address 1
Waiting with the intersection top priority	“x.xx” xxx: Intersection address Note: Displayed when the intersection is recognized and the AGV is waiting with the intersection top priority input turned ON.	Intersection address 1
Passing with the intersection top priority	“x.xx.” xxx: Intersection address Note: Displayed when the intersection is recognized and the AGV is passing through the intersection with the intersection top priority input turned ON.	Intersection address 1

<table>
<tr><th>Contents</th><th>Display</th><th>Example</th></tr>
<tr><td>Intersection waiting countup</td><td>“xx.x.” ↔ “xxx.”
The dot at the 2nd digit blinks.
xxx: Intersection address

Note: When the count for the communication check from the wireless intersection module that is passing through the intersection is incremented in the waiting status, the status changes from waiting to passing, and then it is displayed.
Note: When the count for the communication check is incremented if there is no wireless intersection module that is passing through the intersection, the status changes to passing, and then it is displayed.
Note: Displayed only when the intersection control is performed by the wireless intersection modules.</td><td>Intersection address 1
 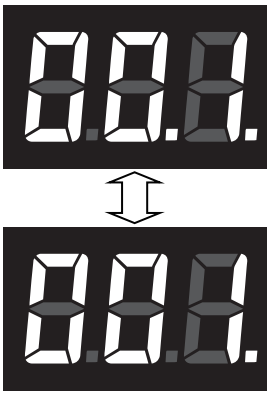 </td></tr>
<tr><td>Ground station communication countup when exiting intersection</td><td>“ .0”

Note: When the wireless intersection module that was passing through the intersection exits the intersection, this exit is transmitted to the ground station. This display appears when the count for the communication check is incremented.
Note: Displayed only when the intersection control is performed using the ground station.</td><td> </td></tr>
<tr><td>Warning</td><td>“:::” Displayed for 1 second. → “xxx”
xxx: Warning code
<table><tr><th>Warning code</th><th>Contents</th></tr><tr><td>001</td><td>The operation mode setting of the wireless intersection module was not registered to the parameters of the ground station.
Register the parameters or change the operation mode.</td></tr><tr><td>100</td><td>An internal reset occurred. Turn OFF the power, and then turn it ON again.</td></tr></table></td><td>Warning code: 001
 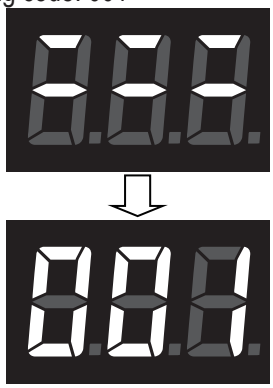 </td></tr>
<tr><td>System error</td><td>“Err” and “xxx” are displayed alternately.
xxx: Error code
<table><tr><th>Error code</th><th>Contents</th></tr><tr><td>001</td><td rowspan="2">The operation mode setting of the wireless intersection module might be out of the setting range. Turn OFF all settings of SW1, and then perform the settings again.</td></tr><tr><td>002</td></tr><tr><td>100</td><td rowspan="2">Replace the wireless intersection module.</td></tr><tr><td>101</td></tr><tr><td>102</td><td>The communication with the ground station was not established.</td></tr></table></td><td>Error code: 001
 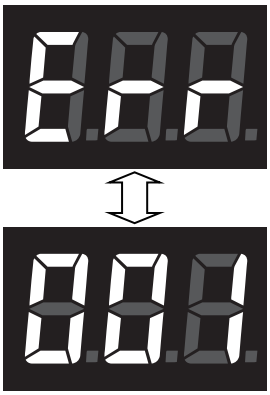 </td></tr>
</table>

7. About related components

7-1. Wireless intersection module box FCP-RCB01-24

This box distributes the CN2 input/output cable wiring of the wireless intersection module FCU-RC01 in accordance with the application.

A bracket to install the wireless intersection module on a ø28-Creform pipe is supplied with the box.

A power switch is provided. When using this box, turn the power switch ON.

Note that this product is dedicated for 24 V.

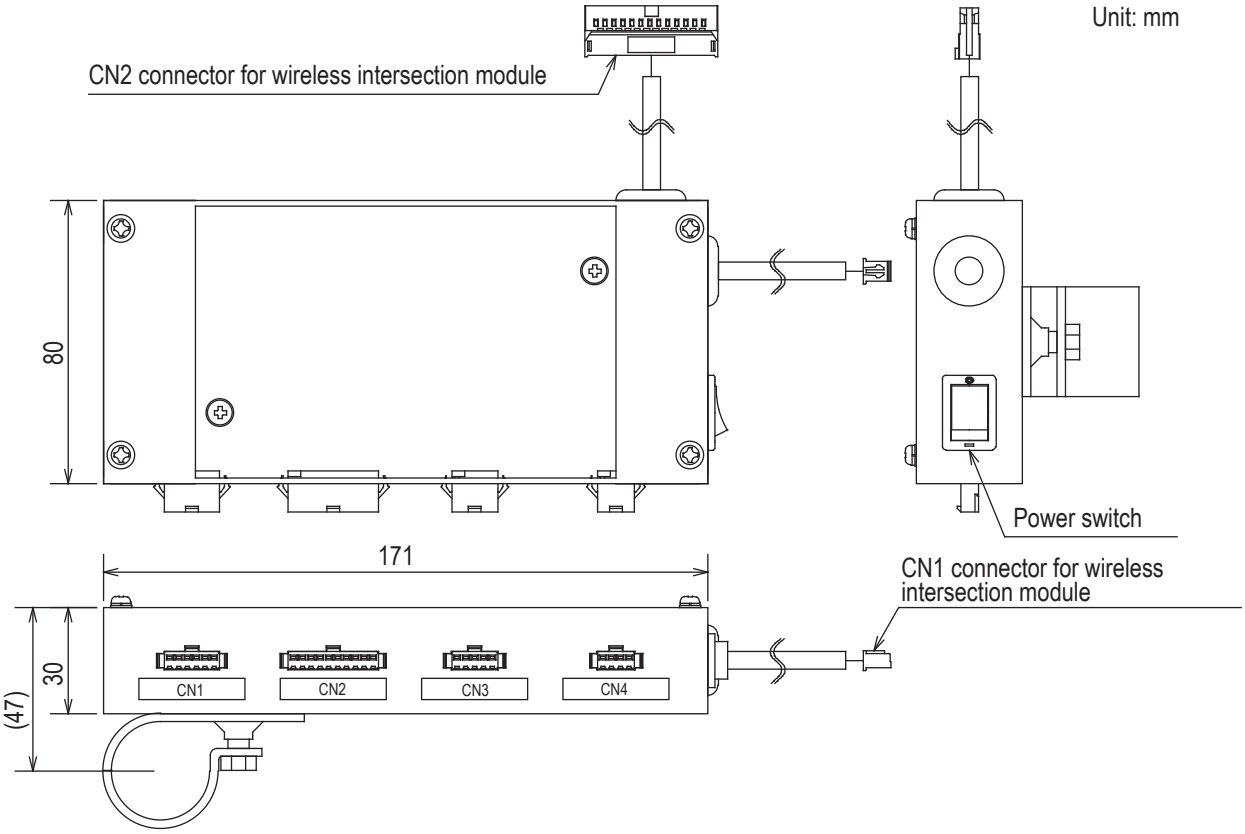

7-1-1. CN1

Connector	SMP-06V-NC cable to cable connection connector (JST)
Fitting connector	SMR-06V-N cable to cable connection connector (JST)

Pin number	Contents	Address sensor mode	RFID mode	External control mode
1	+Vin	-	-	-
2	OUT1	Start	Start	Start
3	OUT6	Pause	Pause	-
4	OUT2	Stop	Stop	Stop
5	IN10	AGV arrival	AGV arrival	AGV arrival
6	-Vin	-	-	-

7-1-2. CN2

Connector	SMP-10V-NC cable to cable connection connector (JST)
Fitting connector	SMR-10V-N cable to cable connection connector (JST)

Pin number	Contents	Address sensor mode	RFID mode	External control mode
1	IN9	Read timing	-	Intersection inquiry
2	IN1	Intersection address (1)	-	Intersection address (1)
3	IN2	Intersection address (2)	-	Intersection address (2)
4	IN3	Intersection address (4)	-	Intersection address (4)
5	IN4	Intersection address (8)	-	Intersection address (8)
6	IN5	Intersection address (16)	-	Intersection address (16)
7	IN6	Intersection address (32)	-	Intersection address (32)
8	IN7	Intersection address (64)	-	Intersection address (64)
9	+Vout	-	-	-
10	-Vout	-	-	-

7-1-3. CN3

Connector	SMP-05V-NC cable to cable connection connector (JST)
Fitting connector	SMR-05V-N cable to cable connection connector (JST)

Pin number	Contents	Address sensor mode	RFID mode	External control mode
1	TxD	-	TxD	-
2	RxD	-	RxD	-
3	SGND	-	SGND	-
8	+Vout	-	-	-
9	-Vout	-	-	-

7-1-4. CN4

Connector	SMP-04V-NC cable to cable connection connector (JST)
Fitting connector	SMR-04V-N cable to cable connection connector (JST)

Pin number	Contents	Address sensor mode	RFID mode	External control mode
1	IN8	AGV error	AGV error	AGV error
2	IN12	Battery voltage drop	Battery voltage drop	Battery voltage drop
3	IN13	Reset	Reset	Reset
4	-Vout	-	-	-

7-2. Wireless intersection module box FCP-RCB01-12

The functions are the same as the FCP-RCB01-24.

A power switch is provided. When using this box, turn the power switch ON.

Note that this product is dedicated for 12V.

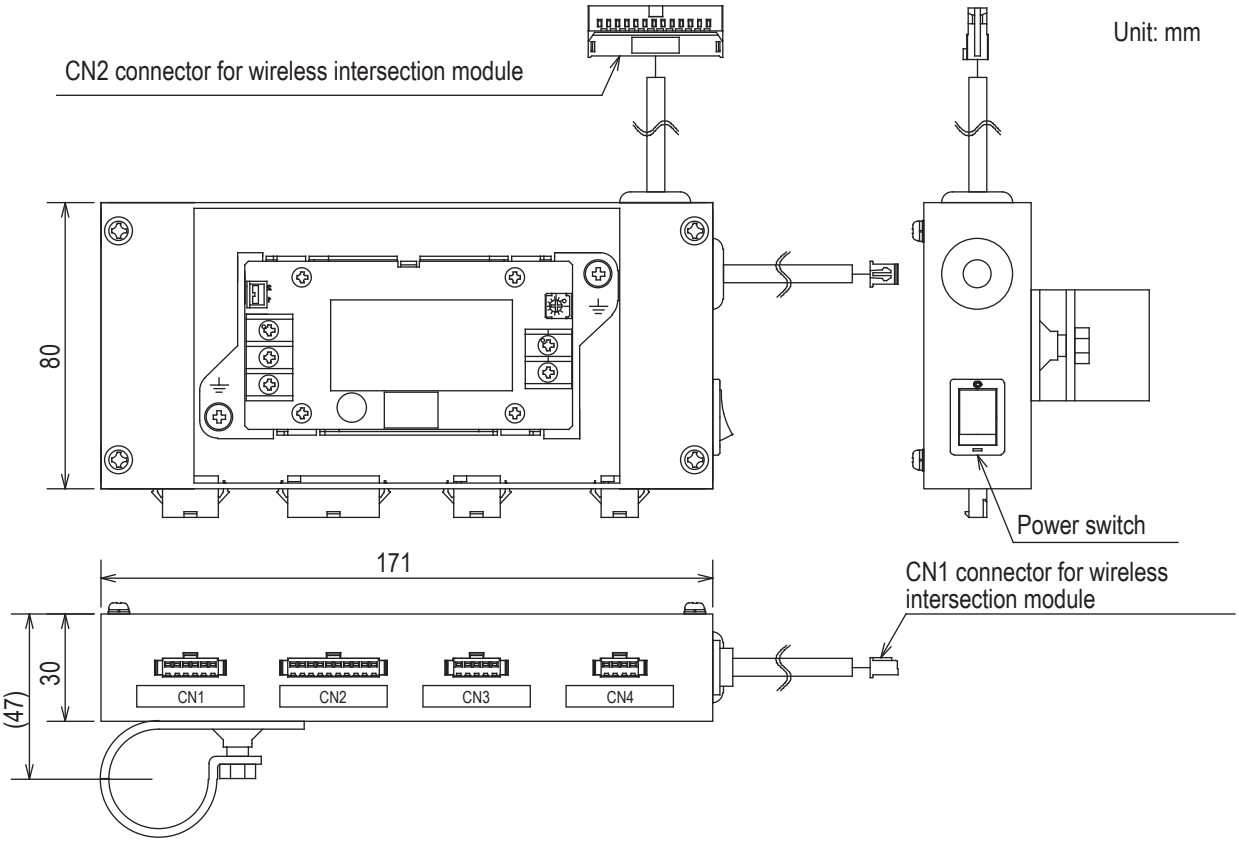

7-2-1. CN1

Connector	SMP-06V-NC cable to cable connection connector (JST)
Fitting connector	SMR-06V-N cable to cable connection connector (JST)

Pin number	Contents	Address sensor mode	RFID mode	External control mode
1	+Vin	-	-	-
2	OUT1	Start	Start	Start
3	OUT6	Pause	Pause	-
4	OUT2	Stop	Stop	Stop
5	IN10	AGV arrival	AGV arrival	AGV arrival
6	-Vin	-	-	-

7-2-2. CN2

Connector	SMP-10V-NC cable to cable connection connector (JST)
Fitting connector	SMR-10V-N cable to cable connection connector (JST)

Pin number	Contents	Address sensor mode	RFID mode	External control mode
1	IN9	Read timing	-	Intersection inquiry
2	IN1	Intersection address (1)	-	Intersection address (1)
3	IN2	Intersection address (2)	-	Intersection address (2)
4	IN3	Intersection address (4)	-	Intersection address (4)
5	IN4	Intersection address (8)	-	Intersection address (8)
6	IN5	Intersection address (16)	-	Intersection address (16)
7	IN6	Intersection address (32)	-	Intersection address (32)
8	IN7	Intersection address (64)	-	Intersection address (64)
9	+Vout	-	-	-
10	-Vout	-	-	-

7-2-3. CN3

Connector	SMP-05V-NC cable to cable connection connector (JST)
Fitting connector	SMR-05V-N cable to cable connection connector (JST)

Pin number	Contents	Address sensor mode	RFID mode	External control mode
1	TxD	-	TxD	-
2	RxD	-	RxD	-
3	SGND	-	SGND	-
8	+Vout	-	-	-
9	-Vout	-	-	-

7-2-4. CN4

Connector	SMP-04V-NC cable to cable connection connector (JST)
Fitting connector	SMR-04V-N cable to cable connection connector (JST)

Pin number	Contents	Address sensor mode	RFID mode	External control mode
1	IN8	AGV error	AGV error	AGV error
2	IN12	Battery voltage drop	Battery voltage drop	Battery voltage drop
3	IN13	Reset	Reset	Reset
4	-Vout	-	-	-

7-3. Pencil type antenna FCP-RCA01

This antenna is connected to the antenna connection section of the wireless intersection module FCU-RC01.

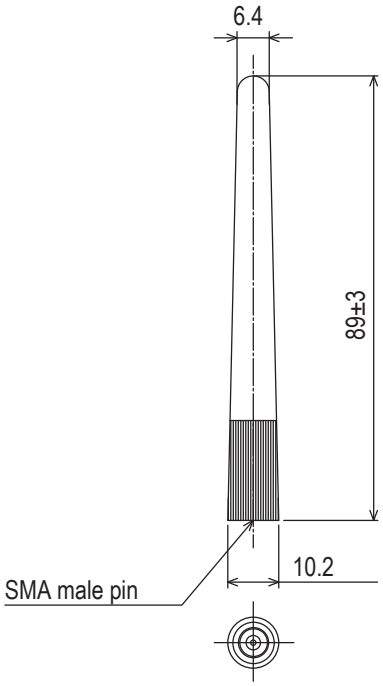

Antenna List

No.	Manufacturer	Part No.	Antenna Type	Peak Gain
1	Arrow 7	ARN-AP03	Pencil type antenna	2.14dBi for 2.4 GHz

Note: The antenna connector is Reverse SMA type.

7-4. Flanged antenna with bracket FCP-RCA02

This antenna is used when it is installed at a position away from the wireless intersection module.

- The cable length is approximately 1 m.
- The radio wave is attenuated (lost) by the cable.
- The communicable distance is shortened approximately 15% when compared to the pencil type antenna.
- When two wireless units that communicate with each other use the flanged antennas, the communication distance is shortened by approximately 30% due to double effects.
- For cable bending, the bending radius is 50 mm or more. If the cable is bent excessively, the insulator inside the cable is deformed and the cable loss increases, causing the communicable distance to be shortened.

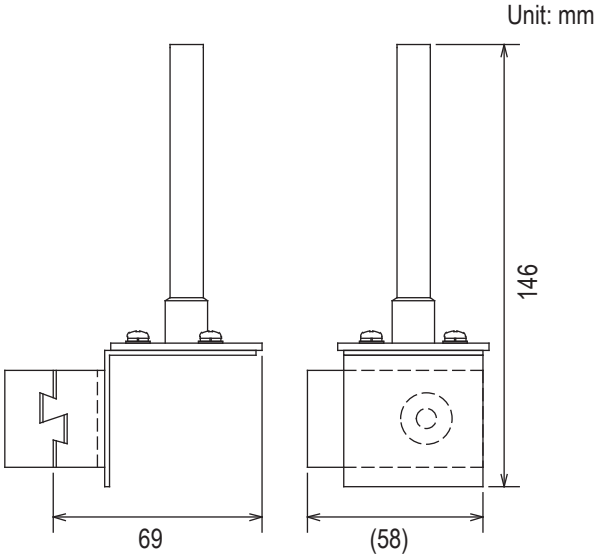

7-5. Address sensor with bracket FCP-RCS01

This sensor reads the address magnetic plate to instruct the intersection entrance or intersection exit.

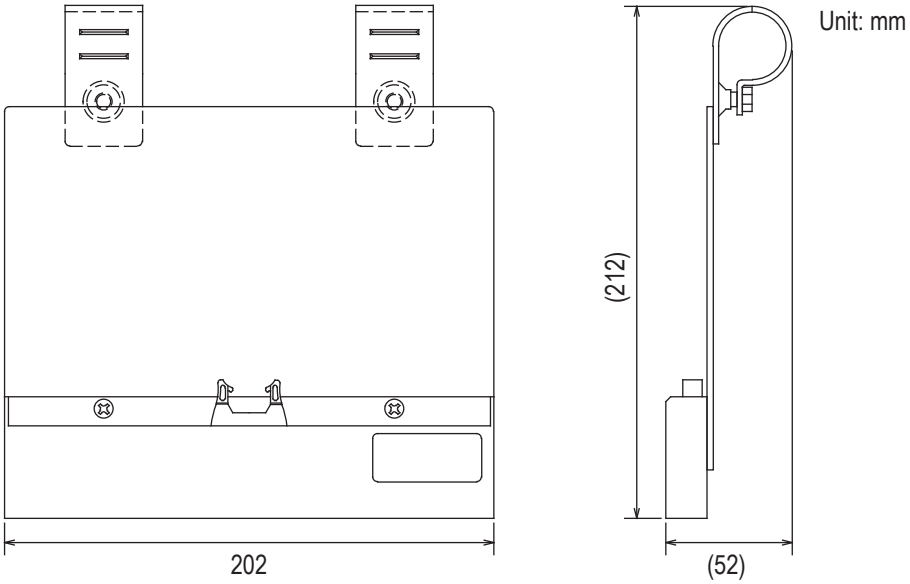

7-5-1. Specifications

Operating temperature range	-10 to 60ºC (No dew condensation or freezing allowed.)
Operating humidity range	35 to 95% RH (No dew condensation allowed.)

7-6. RFID antenna with bracket FCP-RCS02

This sensor reads the ID tag to instruct the intersection entrance or intersection exit.

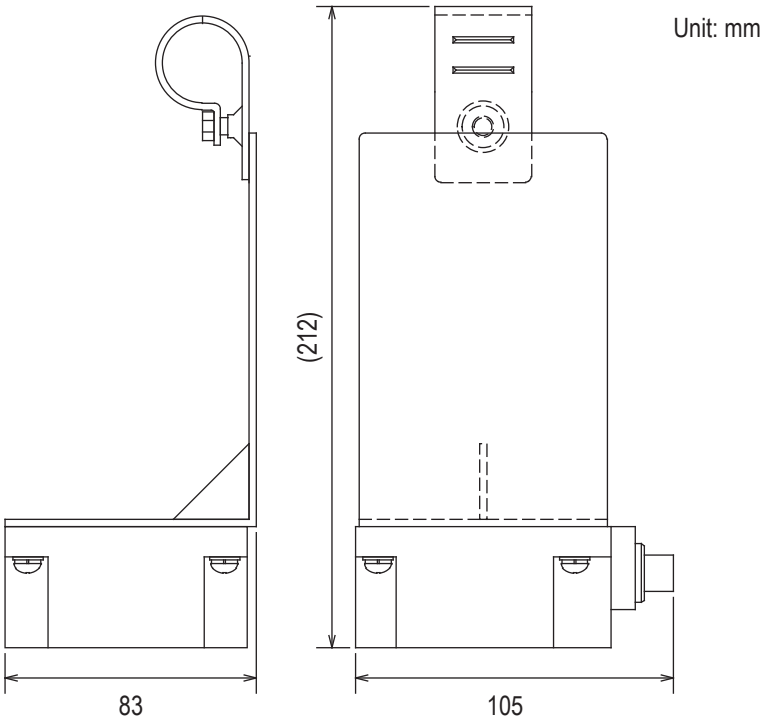

7-6-1. Specifications

Operating temperature range	0 to 70ºC (No dew condensation or freezing allowed.)

7-7. Address sensor with bracket for small Drive Unit FCP-RCS03

This sensor reads the address magnetic plate to instruct the intersection entrance or intersection exit.
This sensor is used for the small Drive Unit.

Unit: mm

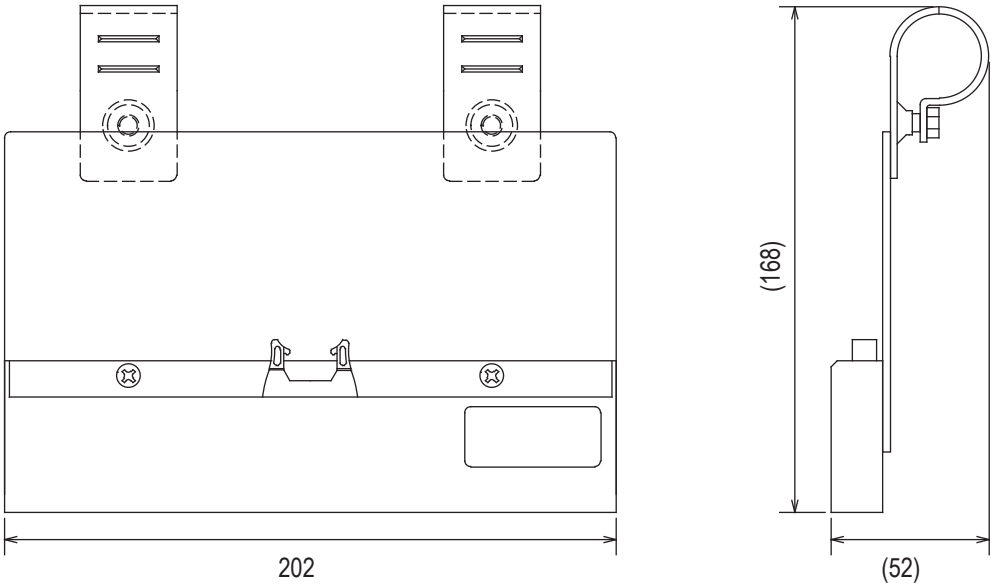

7-7-1. Specifications

Operating temperature range	-10 to 60ºC (No dew condensation or freezing allowed.)
Operating humidity range	35 to 95% RH (No dew condensation allowed.)

7-8. RFID antenna with bracket for small Drive Unit FCP-RCS04

This sensor reads the ID tag to instruct the intersection entrance or intersection exit.
This sensor is used for the small Drive Unit.

Unit: mm

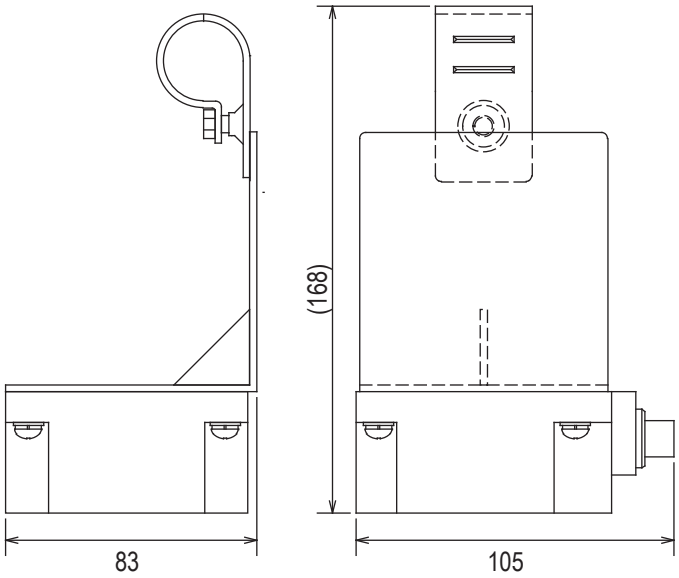

7-8-1. Specifications

Operating temperature range	0 to 70ºC (No dew condensation or freezing allowed.)

7-9. Cable for 24 V Drive Unit FCP-RCC01-24

This cable connects the CNG connector of the 24 V forward Drive Unit and the CN1 connector of the wireless intersection module box.

Unit: mm

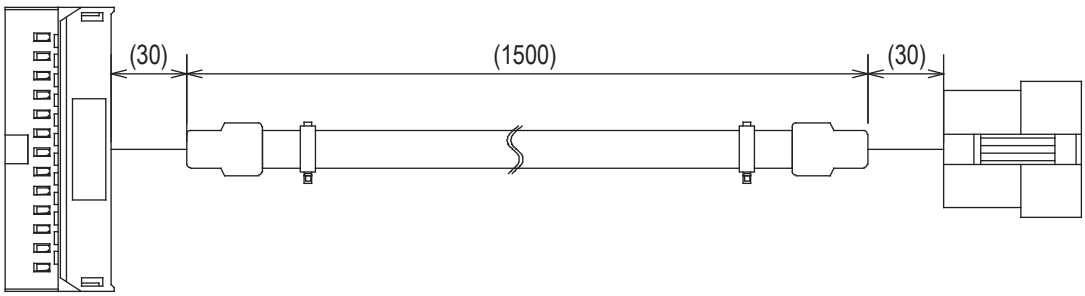

Drive Unit CNG connector		CN1 connector of wireless intersection module box	
Pin number	Contents	Pin number	Contents
1	+24 V	1	+Vin
5	Command stop input		
6	Right travel/medium speed change-over input		
7	Speed change-over/medium speed change-over input		
8	Start signal input	2	Start input
10	Pause input	3	Pause output
11	Stop input	4	Stop output
12	Input change-over input		
13	S sensor output	5	AGV arrival input
14	Right travel/medium speed change-over output		
15	Speed change-over/medium speed change-over output		
21	0 V		
22	0 V	6	-Vin

7-10. Cable for 12V Drive Unit FCP-RCC01-12

This cable connects the CNG connector of the 12V forward Drive Unit and the CN1 connector of the wireless intersection module box.

Unit: mm

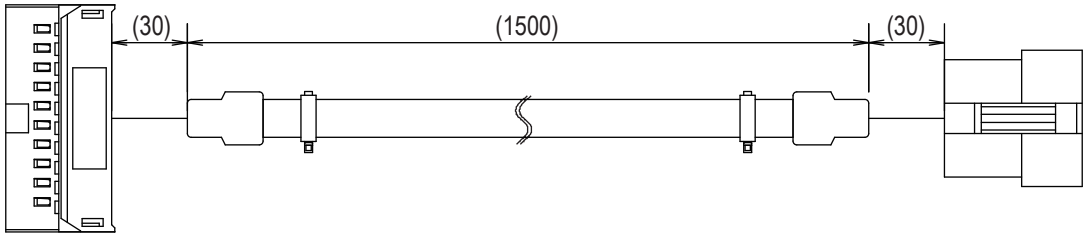

Drive Unit CNG connector		CN1 connector of wireless intersection module box	
Pin number	Contents	Pin number	Contents
1	Command stop input		
2	Right travel/medium speed change-over input		
3	Speed change-over/medium speed change-over input		
4	Start signal input	2	Start output
6	Pause input	3	Pause output
7	Stop input	4	Stop output
8	Input change-over input		
9	S sensor output	5	AGV arrival input
10	Right travel/medium speed change-over output		
11	Speed change-over/medium speed change-over output		
17	+12 V	1	+Vin
19	0 V		
20	0 V	6	-Vin

7-11. Cable for course 30 FCP-RCC02

This cable connects the CND or CNG connector of the forward or forward/backward course 30 unit and the CN1 and CN2 connectors of the wireless intersection module box.

Unit: mm

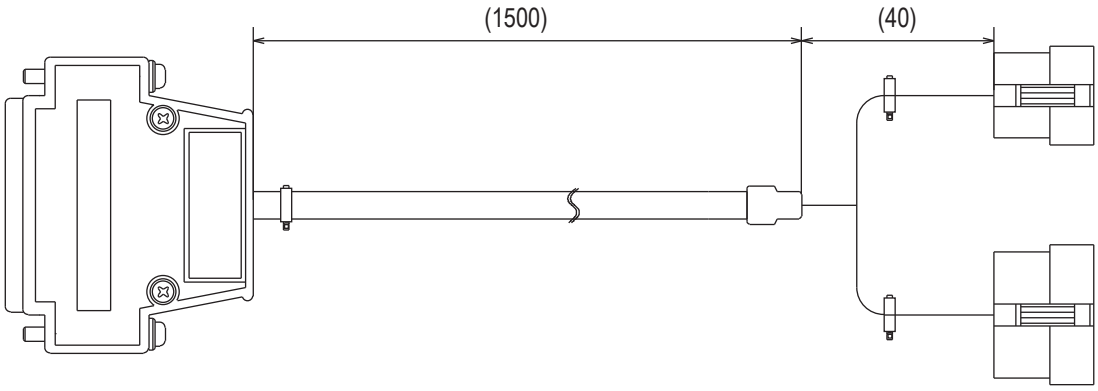

External option connector of course 30 unit	
Pin number	Contents
1	Station arrival output
6	External operation command 1 output
7	External operation command 2 output
8	External operation command 3 output
9	External operation command 4 output
10	External operation command 5 output
16	External start input
17	External stop input
18	+
22	0 V

CN1 connector of wireless intersection module box	
Pin number	Contents
5	AGV arrival input
2	Start output
4	Stop output
1	+Vin
6	-Vin

CN2 connector of wireless intersection module box	
1	Intersection inquiry input
2	Intersection address (1) input
3	Intersection address (2) input
4	Intersection address (4) input
5	Intersection address (8) input

7-12. Cable for small Drive Unit FCP-RCC03

This cable connects the external control cable FCSA-HA14P9 that is an optional component of the small Drive Unit and the CN1 connector of the wireless intersection module box.

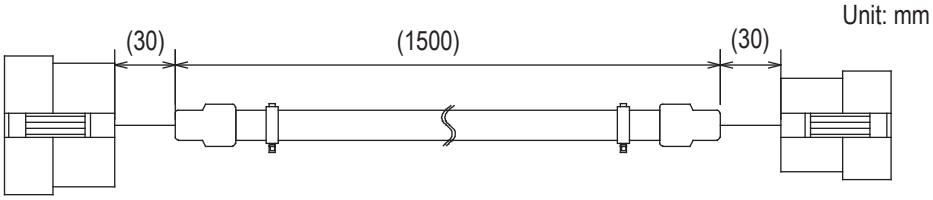

External control cable for small Drive Unit		CN1 connector of wireless intersection module box	
Pin number	Contents	Pin number	Contents
1	External stop input	4	Stop output
2	External start input	2	Start output
3	Arrival output	5	AGV arrival input
5	+12 V	1	+Vin
6	0 V	6	-Vin

7-13. Cable for address sensor FCP-RCC04

The cable connects the address sensor with bracket FCP-RCS01 or address sensor with bracket for small Drive Unit FCP-RCS03 and the CN2 connector of the wireless intersection module box.

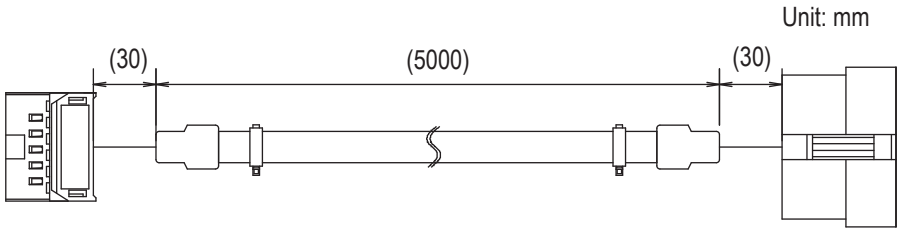

Address sensor		CN2 connector of wireless intersection module box	
Pin number	Contents	Pin number	Contents
1	Read-out timing output	1	Read-out timing input
2	Data No. 0 output	2	Intersection address (1) input
3	Data No. 1 output	3	Intersection address (2) input
4	Data No. 2 output	4	Intersection address (4) input
5	Data No. 3 output	5	Intersection address (8) input
6	Data No. 4 output	6	Intersection address (16) input
7	Data No. 5 output	7	Intersection address (32) input
8	—	8	Intersection address (64) input
9	+Vin	9	+Vout
10	-Vin	10	-Vout

7-14. Cable for RFID antenna FCP-RCC05

This cable connects the RFID antenna with bracket FCP-RCS02 or RFID antenna with bracket for small Drive Unit FCP-RCS04 and the CN3 connector of the wireless intersection module box.

Unit: mm

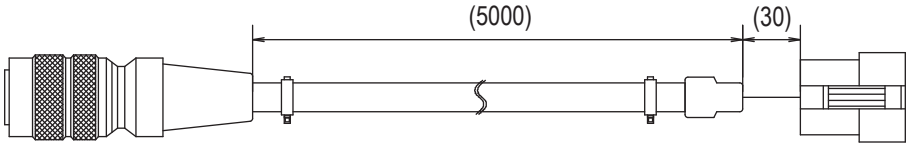

RFID antenna		CN3 connector of wireless intersection module box	
Pin number	Contents	Pin number	Contents
2	TxD	1	TxD
3	RxD	2	RxD
6	-Vin	4	+Vout
7	+Vin	5	-Vout
8	COM	3	SGND

7-15. Wireless intersection module setting cable FCP-RCC08

This cable is needed to set the parameters to the wireless intersection module.

Unit: mm

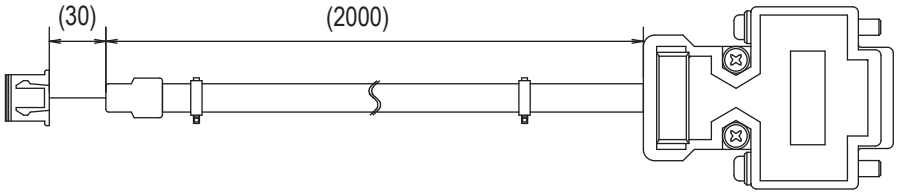

CN3 connector of wireless intersection module box		RS232C port of personal computer	
Pin number	Contents	Pin number	Contents
1	TxD	2	RxD
2	RxD	3	TxD
3	SGND	5	SGND

7-16. Address magnetic plate FCP-SMG01-*

The magnetic plate has the address information to be read out by the address sensor with bracket FCP-RCS01 or the address sensor with bracket for small Drive Unit FCP-RCS03.
When the address magnetic plate with an arbitrary intersection address (address information) is installed at the intersection entrance and it is read out, the intersection address is instructed to the wireless intersection module.
When intersection address (address information) “0” is read out at the intersection exit, the intersection exit is instructed. Usable address information values range from 0 to 62. * portion of the part number is the address information.
Please specify the address information when ordering the address magnetic plate.

(Example) For address information 5: FCP-SMG01-05

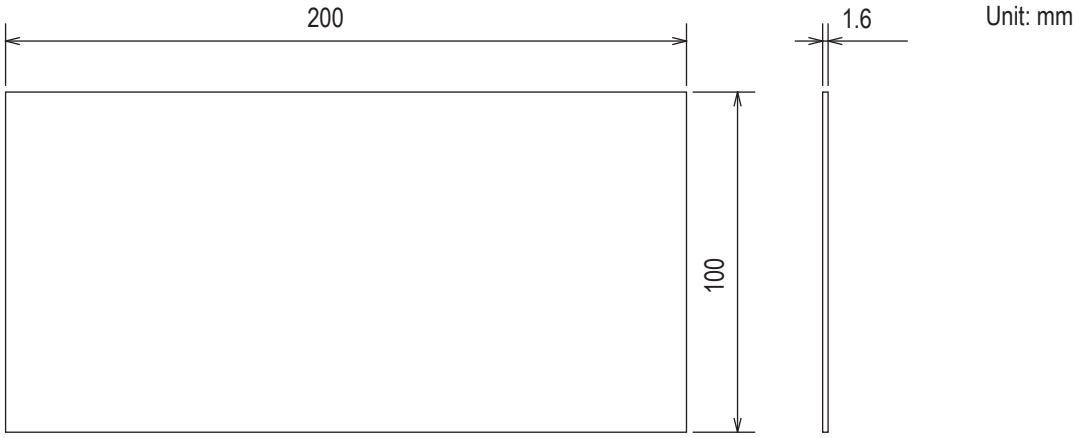

7-16-1. Specifications

Operating temperature range	-10 to 60ºC

7-17. ID tag FCP-TAG01

This ID tag has the address information to be read out by the RFID antenna with bracket FCP-RCS02 or RFID antenna with bracket for small Drive Unit FCP-RCS04.

When the ID tag with an arbitrary intersection address (address information) is installed at the intersection entrance and it is read out, the intersection address is instructed to the wireless intersection module. When intersection address (address information) “000” is read out at the intersection exit, the intersection exit is instructed. Usable address information values range from 000 to 127.

Please specify the address information when ordering the ID tag as the address information is written at shipment.

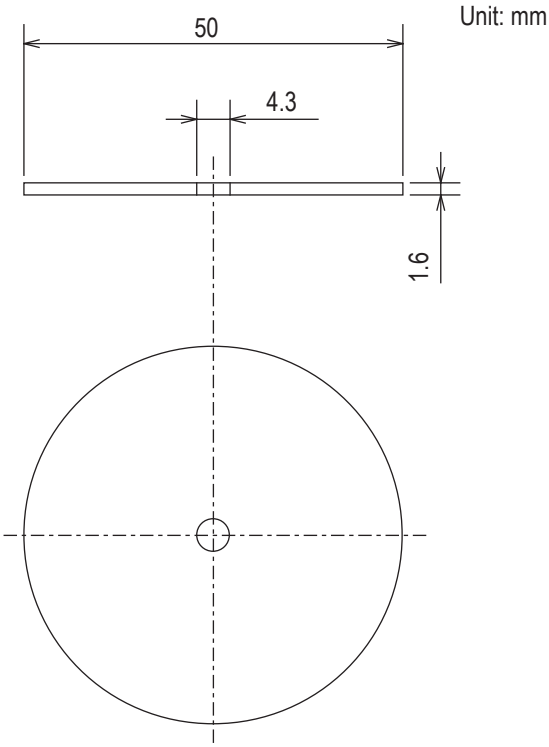

7-17-1. Specifications

Operating temperature		-25 to 70ºC
Storage humidity		-25 to 85ºC
Storage structure		IP67
Service life	Number of read-out times	Unlimited
	Number of write times	10 billion times
	Data retention	10 years

7-18. Wireless intersection module mounting bracket FCU-RCK06

This mounting bracket is used when the single wireless intersection module is used in the ground station mode, etc.
A bracket to install the wireless intersection module on a ø28-Creform pipe is attached.

Unit: mm

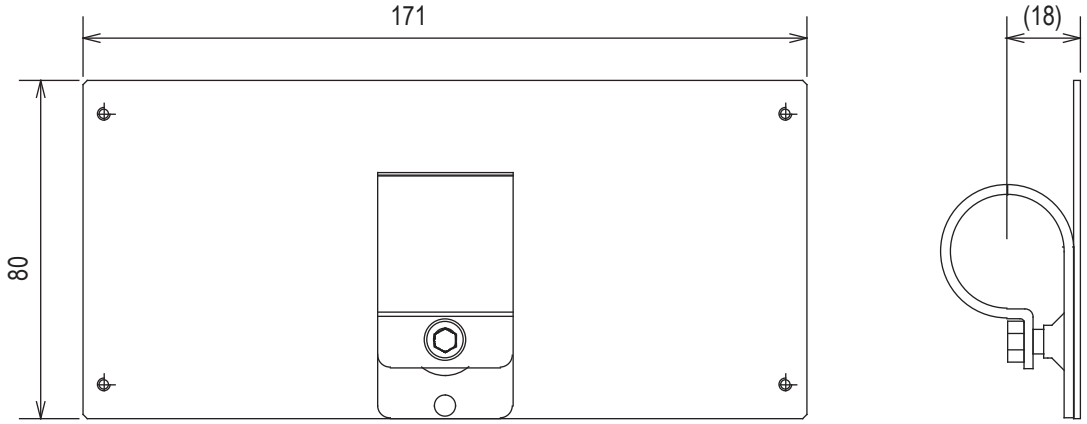

7-19. Wireless intersection module mounting bracket FCU-RCK07

This mounting bracket is used when the single wireless intersection module is used in the ground station mode, etc.
A bracket to install the wireless intersection module on a ø28-Creform pipe is attached.

Unit: mm

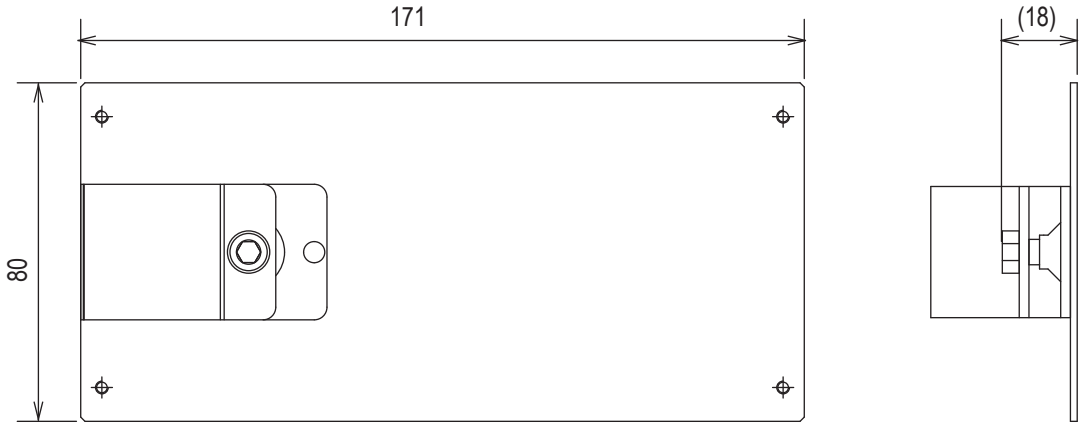

7-20. AC adapter FCP-RCP01

This AC adapter is used to supply the power when the wireless intersection module is used in the ground station mode.

Unit: mm

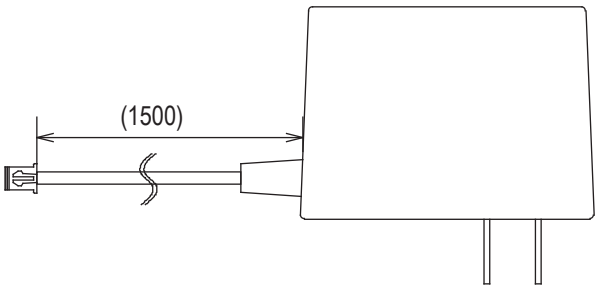

8. Installation and connections

8-1. About installation place

Strictly observe the following installation conditions when performing the installation.

1) Install the antennas at the highest possible positions where the antennas can be seen together.
   Since the radio wave with a high frequency is used, the straightness of the radio wave is strong and it is difficult to reach hidden places. Therefore, install the antennas at positions where the antennas can be simultaneously seen as much as possible.

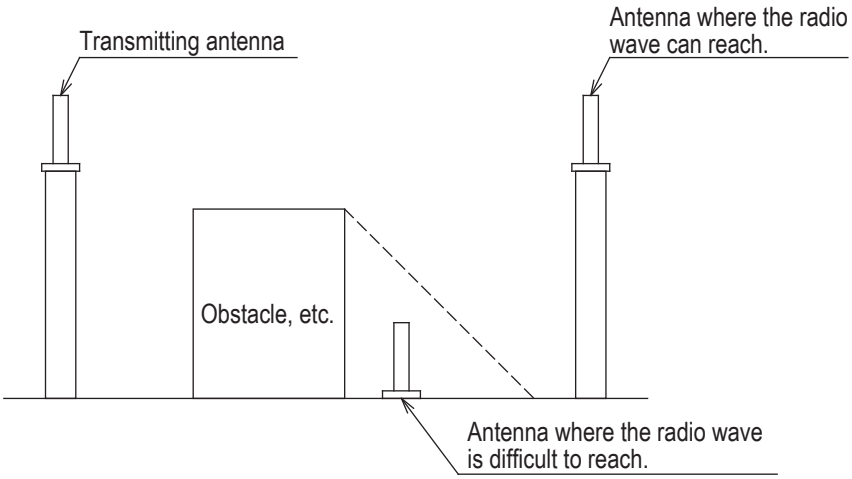

Figure. Shadow of radio wave

2) Install the antenna 200 mm or more away from the floor.
   Since the antenna is installed in an open space where its installation height is high, it becomes difficult for obstacles to affect the antenna and the radio wave transmits easily.
   If the antenna position is extremely low, the radio wave transmitted from the antenna becomes weak.

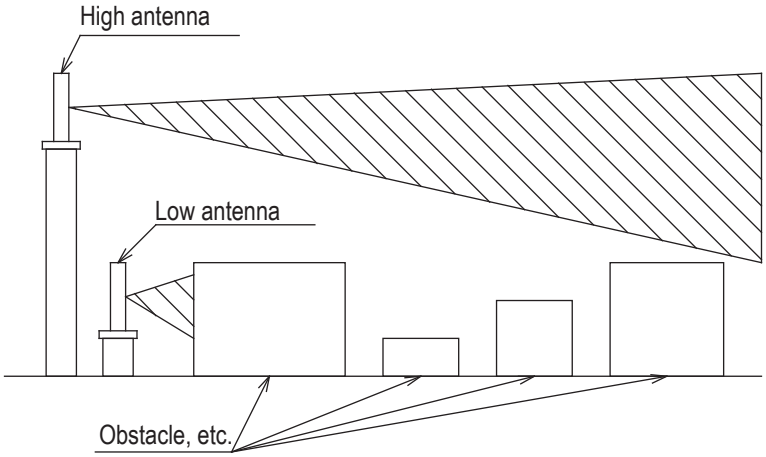

Figure. Height of antenna

3) Install the antenna so that it is not parallel to cables or metallic plates.
   In addition, install the antenna away from any cable, metallic plates, concrete, plasterboard, lumber, and wall surfaces as much as possible (300 mm or more).
   When there are obstacles around the antenna, the radio wave becomes obstructed and is not transmitted optimally. In particular, metallic objects affect the antenna greatly as it reflects the radio wave. When installing the flanged antenna on a Creform pipe, install it so that the Creform pipe does not affect the antenna as shown in the figure.

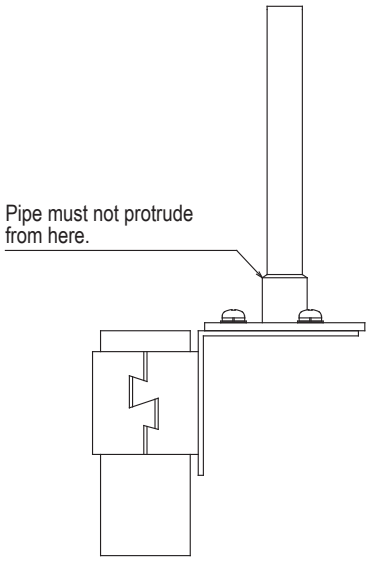

Figure. Installation on pipe

4) When installing the antenna, adjust the antenna direction.
   Install the antennas so that they face in the same direction as shown in the figure.
   When the direction differs 90 degrees, the communication distance becomes short extremely.

Figure. Correct direction

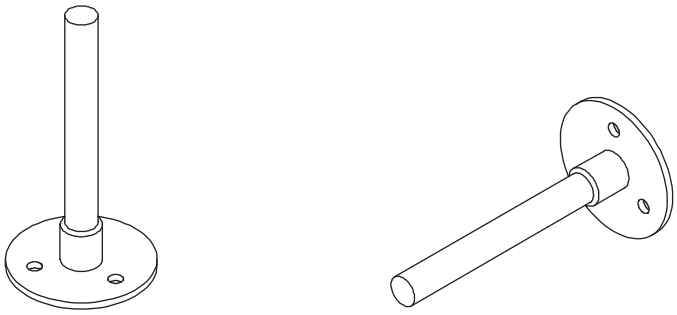

Figure. Incorrect direction

5) Install the antenna at a position where an object does not hit it.
   The antenna is not designed so that it can be hit by an object. If any impact is applied to the antenna, it may be damaged. Even though the antenna may appear normal, wire breakage may occur inside the antenna, causing the communication to fail.

8-2. About installation

8-2-1. Wireless Intersection Module

Secure the wireless intersection module FCU-RC01 to the wireless intersection module box FCP-RCB01-24 or FCP-RCB01-12 with the screws supplied with the wireless intersection module box, connect the MIL 26-core connector to the CN2 connector of the wireless intersection module and the XHP-2 connector to the CN1 connector. After that, the wireless intersection module can be installed on a Creform pipe using the flat saddle of the wireless intersection module.

Since the status is indicated on the display of the wireless intersection module, install the wireless intersection module at a position where the display can be recognized.

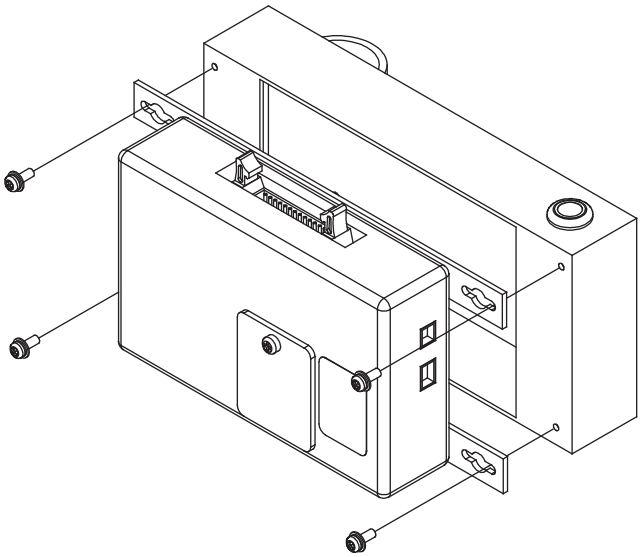

Figure. Installation of wireless intersection module in wireless intersection module box

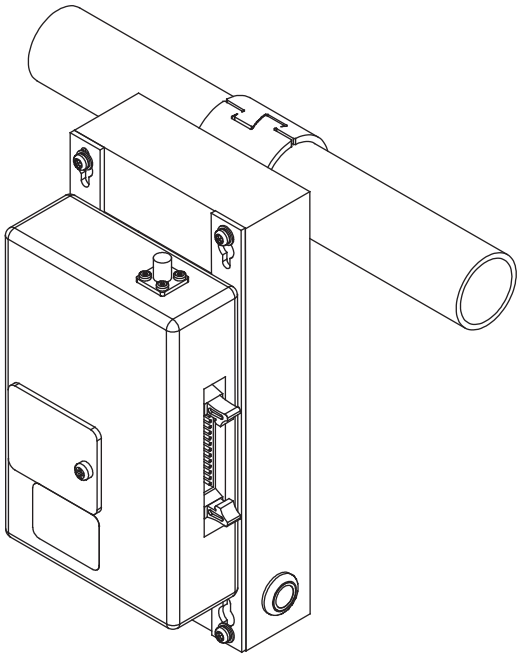

Figure. Installation on Creform pipe

When the wireless intersection module is used as a ground station, install it on a Creform pipe using the wireless intersection module mounting bracket FCP-RCK06 or FCP-RCK07.

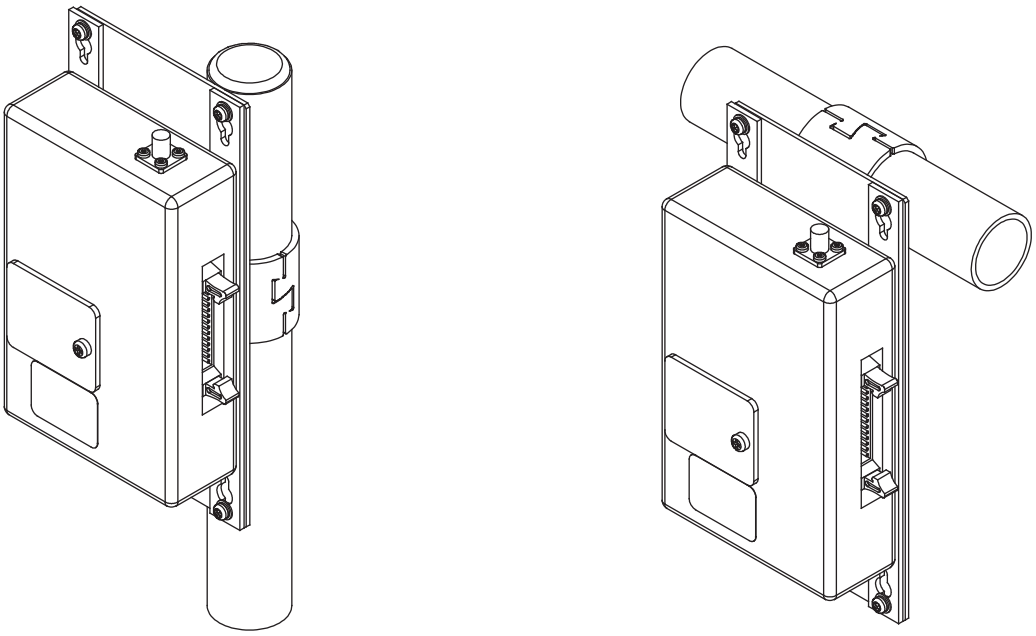

Figure. Installation on Creform pipe

8-3. Connections and settings

Select components to be connected in accordance with the system configuration.
The total number of usable intersection addresses is determined depending on the configuration.
In addition, it is necessary to change the wireless intersection module settings so that they match the configuration.

8-3-1. Intersection is instructed by the address sensor when the 24 V forward type Drive Unit is used.

◈ Settings

Usable intersection address		1 to 62
Switch settings of wireless intersection module	SW1-1	OFF
	SW1-2	OFF
	SW1-3	OFF
	SW1-4	OFF
	SW1-5	OFF
	SW1-6	OFF
	SW1-7	OFF
	SW1-8	OFF
	RSW1 to 3	Create a unique setting for each wireless intersection module that is not duplicated.
	RSW4	Select a usable frequency band.

◈ Configuration

Product name	Model number	Remarks
Wireless Intersection Module	FCU-RC01	
Wireless intersection module box	FCP-RCB01-24	
Pencil type antenna	FCP-RCA01	• Select either antenna depending on the application. • The flanged antenna attenuates the radio wave due to the cable. The communicable distance is shortened approximately 15% when compared to the pencil type antenna. When two wireless units that communicate with each other use the flanged antennas, the communication distance is shortened by approximately 30% due to double effects.
Flanged antenna with bracket	FCP-RCA02	
Address sensor with bracket	FCP-RCS01	
Cable for 24 V Drive Unit	FCP-RCC01-24	
Cable for address sensor	FCP-RCC04	
Address magnetic plate	FCP-SMG01-*	An address magnetic plate corresponding to the intersection is needed.

◈ Connection diagram

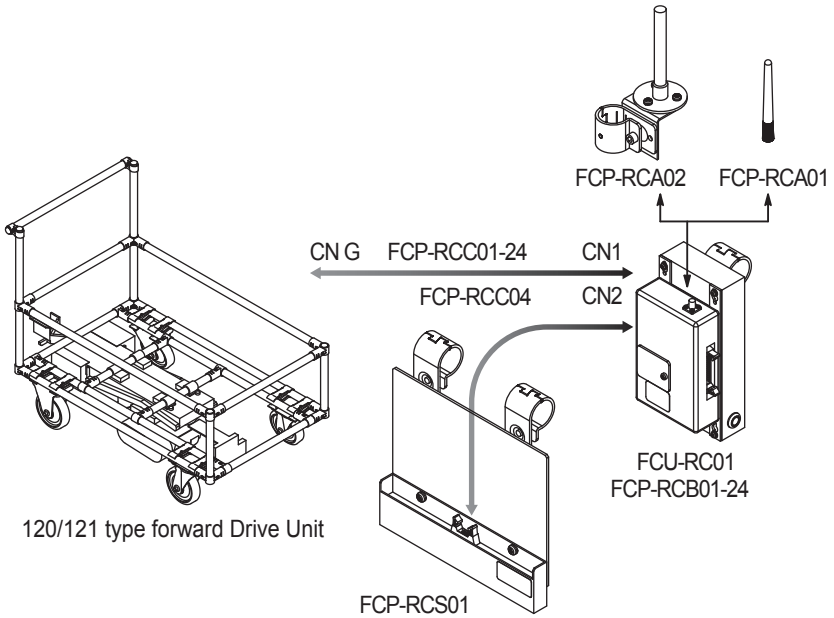

8-3-2. Intersection is instructed by the RFID antenna when the 24 V forward type Drive Unit is used.

◈ Settings

Usable intersection address		1 to 127
Switch settings of wireless intersection module	SW1-1	ON
	SW1-2	OFF
	SW1-3	OFF
	SW1-4	OFF
	SW1-5	OFF
	SW1-6	OFF
	SW1-7	OFF
	SW1-8	OFF
	RSW1 to 3	Create a unique setting for each wireless intersection module that is not duplicated.
	RSW4	Select a usable frequency band.

◈ Configuration

Product name	Model number	Remarks
Wireless Intersection Module	FCU-RC01	
Wireless intersection module box	FCP-RCB01-24	
Pencil type antenna	FCP-RCA01	• Select either antenna depending on the application. • The flanged antenna attenuates the radio wave due to the cable. The communicable distance is shortened approximately 15% when compared to the pencil type antenna. When two wireless units that communicate with each other use the flanged antennas, the communication distance is shortened by approximately 30% due to double effects.
Flanged antenna with bracket	FCP-RCA02	
RFID antenna with bracket	FCP-RCS02	
Cable for 24 V Drive Unit	FCP-RCC01-24	
Cable for RFID antenna	FCP-RCC05	
ID tag	FCP-TAG01	An ID tag corresponding to the intersection is needed.

◈ Connection diagram

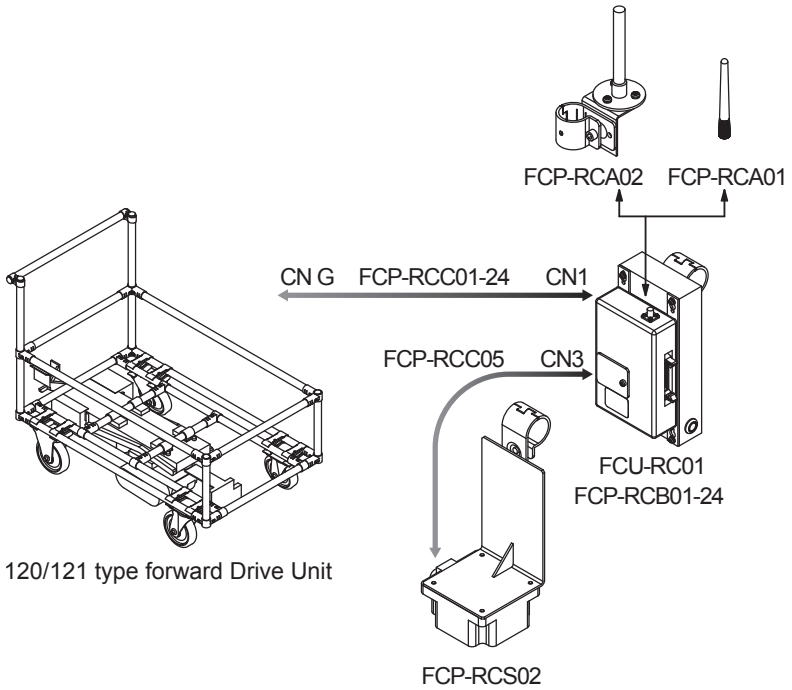

8-3-3. Intersection is instructed by the course 30 unit when the 24 V forward type Drive Unit is used.

◈ Settings

Usable intersection address		1 to 15
Switch settings of wireless intersection module	SW1-1	ON
	SW1-2	ON
	SW1-3	OFF
	SW1-4	ON
	SW1-5	OFF
	SW1-6	OFF
	SW1-7	OFF
	SW1-8	OFF
	RSW1 to 3	Create a unique setting for each wireless intersection module that is not duplicated.
	RSW4	Select a usable frequency band.

◈ Configuration

Product name	Model number	Remarks
Wireless Intersection Module	FCU-RC01	
Wireless intersection module box	FCP-RCB01-24	
Pencil type antenna	FCP-RCA01	• Select either antenna depending on the application. • The flanged antenna attenuates the radio wave due to the cable. The communicable distance is shortened approximately 15% when compared to the pencil type antenna. When two wireless units that communicate with each other use the flanged antennas, the communication distance is shortened by approximately 30% due to double effects.
Flanged antenna with bracket	FCP-RCA02	
Cable for course 30	FCP-RCC02	

◈ Connection diagram

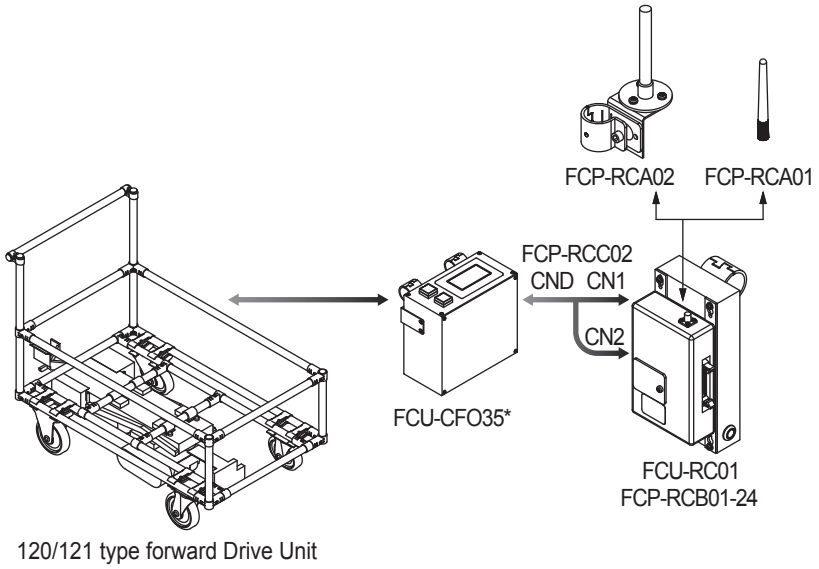

8-3-4. Intersection is not instructed by the course 30 unit, but it is instructed by the address sensor when the 24 V forward type Drive Unit is used.

◈ Settings

Usable intersection address		1 to 62
Switch settings of wireless intersection module	SW1-1 to 1-8	OFF
	SW1-2	OFF
	SW1-3	OFF
	SW1-4	OFF
	SW1-5	OFF
	SW1-6	OFF
	SW1-7	OFF
	SW1-8	OFF
	RSW1 to 3	Create a unique setting for each wireless intersection module that is not duplicated.
	RSW4	Select a usable frequency band.

◈ Configuration

Product name	Model number	Remarks
Wireless Intersection Module	FCU-RC01	
Wireless intersection module box	FCP-RCB01-24	
Pencil type antenna	FCP-RCA01	• Select either antenna depending on the application. • The flanged antenna attenuates the radio wave due to the cable. The communicable distance is shortened approximately 15% when compared to the pencil type antenna. When two wireless units that communicate with each other use the flanged antennas, the communication distance is shortened by approximately 30% due to double effects.
Flanged antenna with bracket	FCP-RCA02	
Address sensor with bracket	FCP-RCS01	
Cable for course 30	FCP-RCC02	
Cable for address sensor	FCP-RCC04	
Address magnetic plate	FCP-SMG01-*	An address magnetic plate corresponding to the intersection is needed.

◈ Connection diagram

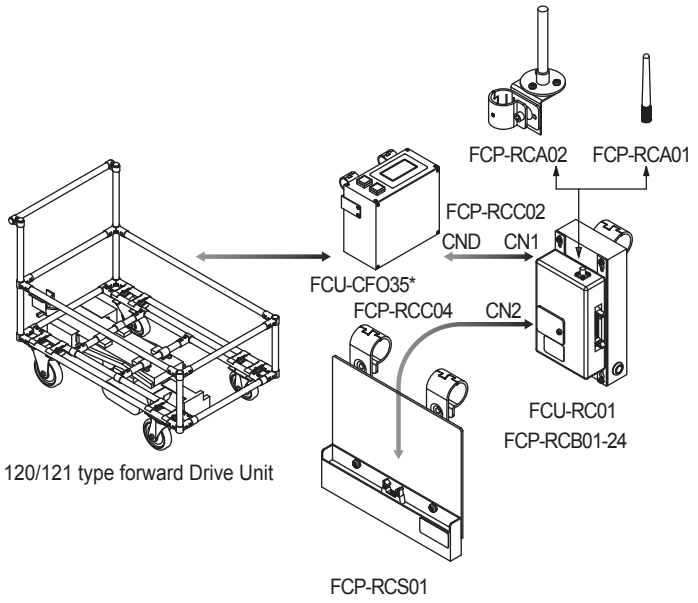

8-3-5. Intersection is not instructed by the course 30 unit, but it is instructed by the RFID antenna when the 24 V forward type Drive Unit is used.

◈ Settings

Usable intersection address		1 to 127
Switch settings of wireless intersection module	SW1-1	ON
	SW1-2	OFF
	SW1-3	OFF
	SW1-4	OFF
	SW1-5	OFF
	SW1-6	OFF
	SW1-7	OFF
	SW1-8	OFF
	RSW1 to 3	Create a unique setting for each wireless intersection module that is not duplicated.
	RSW4	Select a usable frequency band.

◈ Configuration

Product name	Model number	Remarks
Wireless Intersection Module	FCU-RC01	
Wireless intersection module box	FCP-RCB01-24	
Pencil type antenna	FCP-RCA01	• Select either antenna depending on the application. • The flanged antenna attenuates the radio wave due to the cable. The communicable distance is shortened approximately 15% when compared to the pencil type antenna. When two wireless units that communicate with each other use the flanged antennas, the communication distance is shortened by approximately 30% due to double effects.
Flanged antenna with bracket	FCP-RCA02	
RFID antenna with bracket	FCP-RCS02	
Cable for course 30	FCP-RCC02	
Cable for RFID antenna	FCP-RCC05	
ID tag	FCP-TAG01	An ID tag corresponding to the intersection is needed.

◈ Connection diagram

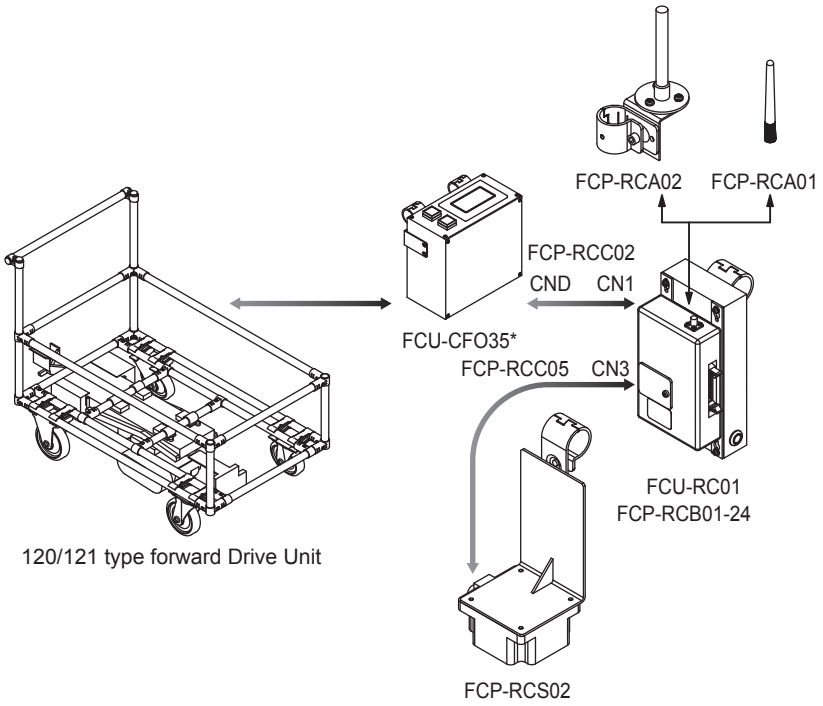

8-3-6. Intersection is instructed by the course 30 unit when the 24 V forward/backward type Drive Unit is used.

◈ Settings

Usable intersection address		1 to 15
Switch settings of wireless intersection module	SW1-1	ON
	SW1-2	ON
	SW1-3	OFF
	SW1-4	ON
	SW1-5	OFF
	SW1-6	OFF
	SW1-7	OFF
	SW1-8	OFF
	RSW1 to 3	Create a unique setting for each wireless intersection module that is not duplicated.
	RSW4	Select a usable frequency band.

◈ Configuration

Product name	Model number	Remarks
Wireless Intersection Module	FCU-RC01	
Wireless intersection module box	FCP-RCB01-24	
Pencil type antenna	FCP-RCA01	• Select either antenna depending on the application. • The flanged antenna attenuates the radio wave due to the cable. The communicable distance is shortened approximately 15% when compared to the pencil type antenna. When two wireless units that communicate with each other use the flanged antennas, the communication distance is shortened by approximately 30% due to double effects.
Flanged antenna with bracket	FCP-RCA02	
Cable for course 30	FCP-RCC02	

◈ Connection diagram

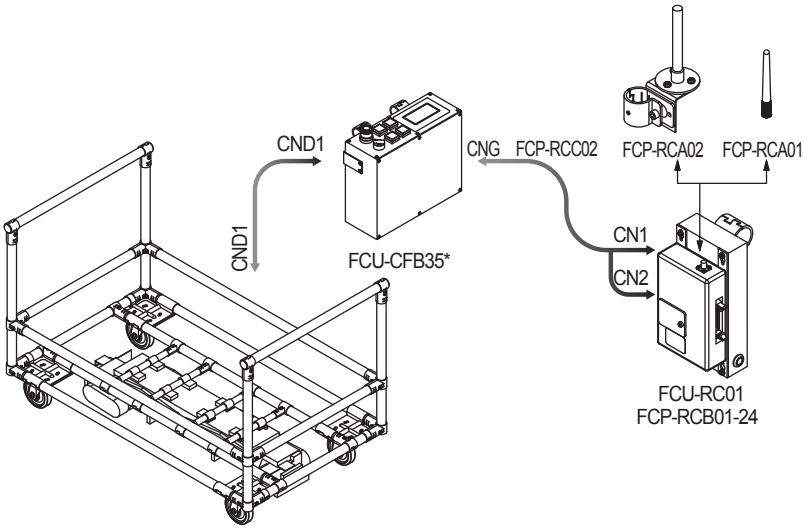

120/121 type forward/backward Drive Unit

8-3-7. Intersection is not instructed by the course 30 unit, but it is instructed by the address sensor when the 24 V forward/backward type Drive Unit is used.

◈ Settings

Usable intersection address		1 to 62
Switch settings of wireless intersection module	SW1-1	OFF
	SW1-2	OFF
	SW1-3	OFF
	SW1-4	OFF
	SW1-5	OFF
	SW1-6	OFF
	SW1-7	OFF
	SW1-8	OFF
	RSW1 to 3	Create a unique setting for each wireless intersection module that is not duplicated.
	RSW4	Select a usable frequency band.

◈ Configuration

Product name	Model number	Remarks
Wireless Intersection Module	FCU-RC01	
Wireless intersection module box	FCP-RCB01-24	
Pencil type antenna	FCP-RCA01	• Select either antenna depending on the application. • The flanged antenna attenuates the radio wave due to the cable. The communicable distance is shortened approximately 15% when compared to the pencil type antenna. When two wireless units that communicate with each other use the flanged antennas, the communication distance is shortened by approximately 30% due to double effects.
Flanged antenna with bracket	FCP-RCA02	
Address sensor with bracket	FCP-RCS01	
Cable for course 30	FCP-RCC02	
Cable for address sensor	FCP-RCC04	
Address magnetic plate	FCP-SMG01-*	An address magnetic plate corresponding to the intersection is needed.

◈ Connection diagram

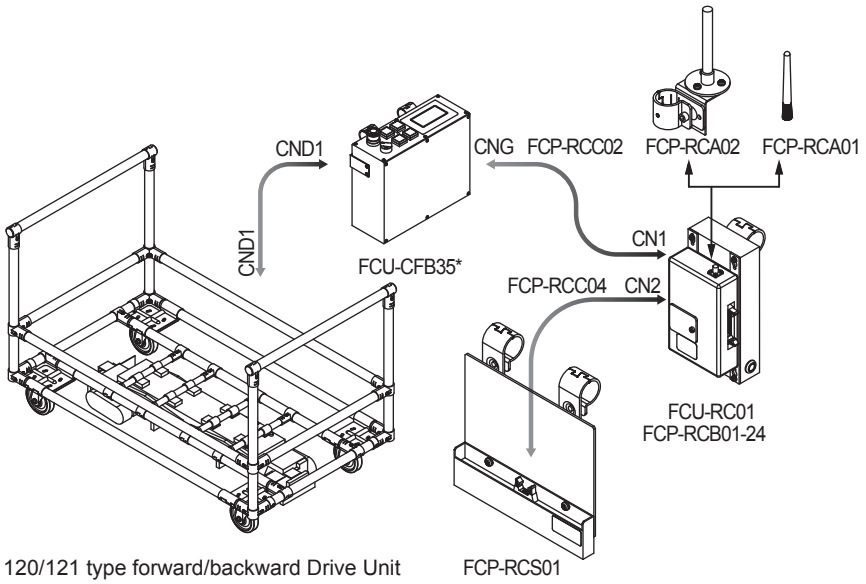

8-3-8. Intersection is not instructed by the course 30 unit, but it is instructed by the RFID antenna when the 24 V forward/backward type Drive Unit is used.

◈ Settings

Usable intersection address		1 to 127
Switch settings of wireless intersection module	SW1-1	ON
	SW1-2	OFF
	SW1-3	OFF
	SW1-4	OFF
	SW1-5	OFF
	SW1-6	OFF
	SW1-7	OFF
	SW1-8	OFF
	RSW1 to 3	Create a unique setting for each wireless intersection module that is not duplicated.
	RSW4	Select a usable frequency band.

◈ Configuration

Product name	Model number	Remarks
Wireless Intersection Module	FCU-RC01	
Wireless intersection module box	FCP-RCB01-24	
Pencil type antenna	FCP-RCA01	• Select either antenna depending on the application. • The flanged antenna attenuates the radio wave due to the cable. The communicable distance is shortened approximately 15% when compared to the pencil type antenna. When two wireless units that communicate with each other use the flanged antennas, the communication distance is shortened by approximately 30% due to double effects.
Flanged antenna with bracket	FCP-RCA02	
RFID antenna with bracket	FCP-RCS02	
Cable for course 30	FCP-RCC02	
Cable for RFID antenna	FCP-RCC05	
ID tag	FCP-TAG01	An ID tag corresponding to the intersection is needed.

◈ Connection diagram

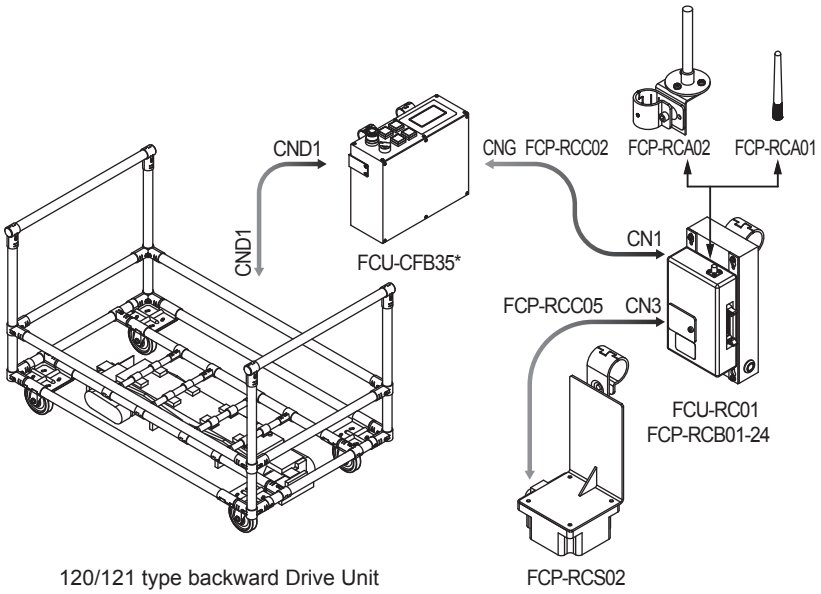

8-3-9. Intersection is instructed by the address sensor when the 12V forward type Drive Unit is used.

◈ Settings

Usable intersection address		1 to 62
Switch settings of wireless intersection module	SW1-1	OFF
	SW1-2	OFF
	SW1-3	OFF
	SW1-4	OFF
	SW1-5	OFF
	SW1-6	OFF
	SW1-7	OFF
	SW1-8	OFF
	RSW1 to 3	Create a unique setting for each wireless intersection module that is not duplicated.
	RSW4	Select a usable frequency band.

◈ Configuration

Product name	Model number	Remarks
Wireless Intersection Module	FCU-RC01	
Wireless intersection module box	FCP-RCB01-12	
Pencil type antenna	FCP-RCA01	• Select either antenna depending on the application. • The flanged antenna attenuates the radio wave due to the cable. The communicable distance is shortened approximately 15% when compared to the pencil type antenna. When two wireless units that communicate with each other use the flanged antennas, the communication distance is shortened by approximately 30% due to double effects.
Flanged antenna with bracket	FCP-RCA02	
Address sensor with bracket	FCP-RCS01	
Cable for 12V Drive Unit	FCP-RCC01-12	
Cable for address sensor	FCP-RCC04	
Address magnetic plate	FCP-SMG01-*	An address magnetic plate corresponding to the intersection is needed.

◈ Connection diagram

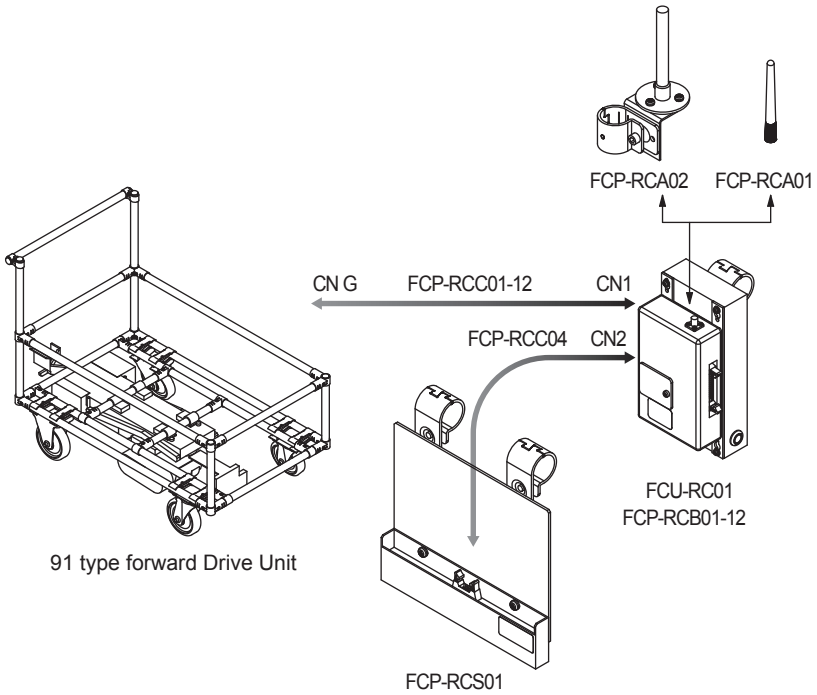

8-3-10. Intersection is instructed by the RFID antenna when the 12V forward type Drive Unit is used.

◈ Settings

Usable intersection address		1 to 127
Switch settings of wireless intersection module	SW1-1	ON
	SW1-2	OFF
	SW1-3	OFF
	SW1-4	OFF
	SW1-5	OFF
	SW1-6	OFF
	SW1-7	OFF
	SW1-8	OFF
	RSW1 to 3	Create a unique setting for each wireless intersection module that is not duplicated.
	RSW4	Select a usable frequency band.

◈ Configuration

Product name	Model number	Remarks
Wireless Intersection Module	FCU-RC01	
Wireless intersection module box	FCP-RCB01-12	
Pencil type antenna	FCP-RCA01	• Select either antenna depending on the application. • The flanged antenna attenuates the radio wave due to the cable. The communicable distance is shortened approximately 15% when compared to the pencil type antenna. When two wireless units that communicate with each other use the flanged antennas, the communication distance is shortened by approximately 30% due to double effects.
Flanged antenna with bracket	FCP-RCA02	
RFID antenna with bracket	FCP-RCS02	
Cable for 12V Drive Unit	FCP-RCC01-12	
Cable for RFID antenna	FCP-RCC05	
ID tag	FCP-TAG01	An ID tag corresponding to the intersection is needed.

◈ Connection diagram

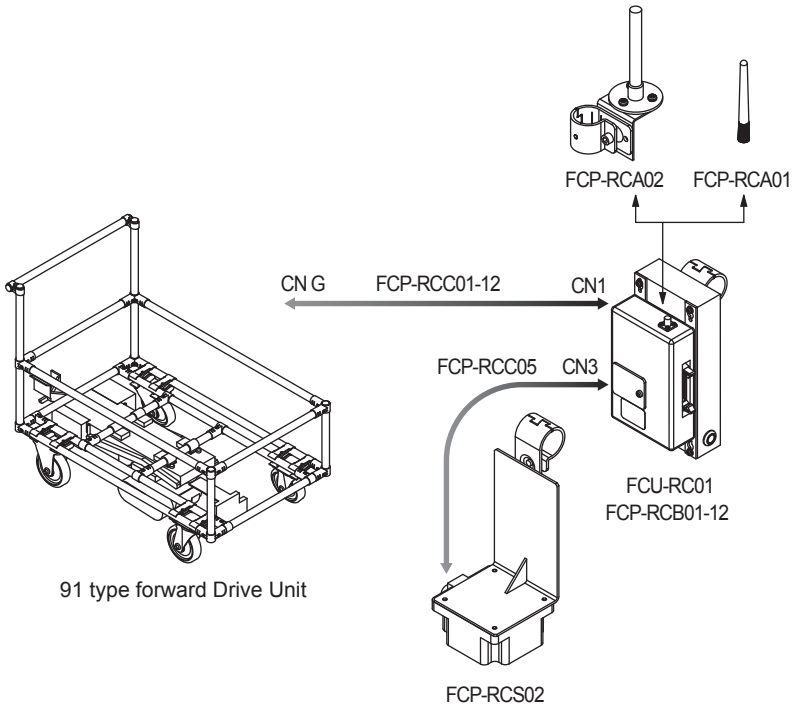

8-3-11. Intersection is instructed by the course 30 unit when the 12V forward type Drive Unit is used.

◈ Settings

Usable intersection address		1 to 15
Switch settings of wireless intersection module	SW1-1	ON
	SW1-2	ON
	SW1-3	OFF
	SW1-4	ON
	SW1-5	OFF
	SW1-6	OFF
	SW1-7	OFF
	SW1-8	OFF
	RSW1 to 3	Create a unique setting for each wireless intersection module that is not duplicated.
	RSW4	Select a usable frequency band.

◈ Configuration

Product name	Model number	Remarks
Wireless Intersection Module	FCU-RC01	
Wireless intersection module box	FCP-RCB01-12	
Pencil type antenna	FCP-RCA01	• Select either antenna depending on the application. • The flanged antenna attenuates the radio wave due to the cable. The communicable distance is shortened approximately 15% when compared to the pencil type antenna. When two wireless units that communicate with each other use the flanged antennas, the communication distance is shortened by approximately 30% due to double effects.
Flanged antenna with bracket	FCP-RCA02	
Cable for course 30	FCP-RCC02	

◈ Connection diagram

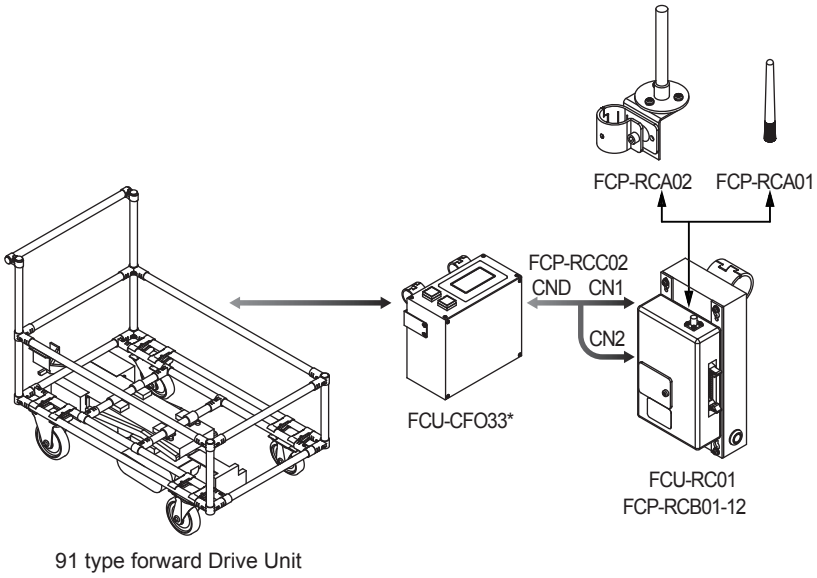

8-3-12. Intersection is not instructed by the course 30 unit, but it is instructed by the address sensor when the 12V forward type Drive Unit is used.

◈ Settings

Usable intersection address		1 to 62
Switch settings of wireless intersection module	SW1-1	OFF
	SW1-2	OFF
	SW1-3	OFF
	SW1-4	OFF
	SW1-5	OFF
	SW1-6	OFF
	SW1-7	OFF
	SW1-8	OFF
	RSW1 to 3	Create a unique setting for each wireless intersection module that is not duplicated.
	RSW4	Select a usable frequency band.

◈ Configuration

Product name	Model number	Remarks
Wireless Intersection Module	FCU-RC01	
Wireless intersection module box	FCP-RCB01-12	
Pencil type antenna	FCP-RCA01	• Select either antenna depending on the application. • The flanged antenna attenuates the radio wave due to the cable. The communicable distance is shortened approximately 15% when compared to the pencil type antenna. When two wireless units that communicate with each other use the flanged antennas, the communication distance is shortened by approximately 30% due to double effects.
Flanged antenna with bracket	FCP-RCA02	
Address sensor with bracket	FCP-RCS01	
Cable for course 30	FCP-RCC02	
Cable for address sensor	FCP-RCC04	
Address magnetic plate	FCP-SMG01-*	An address magnetic plate corresponding to the intersection is needed.

◈ Connection diagram

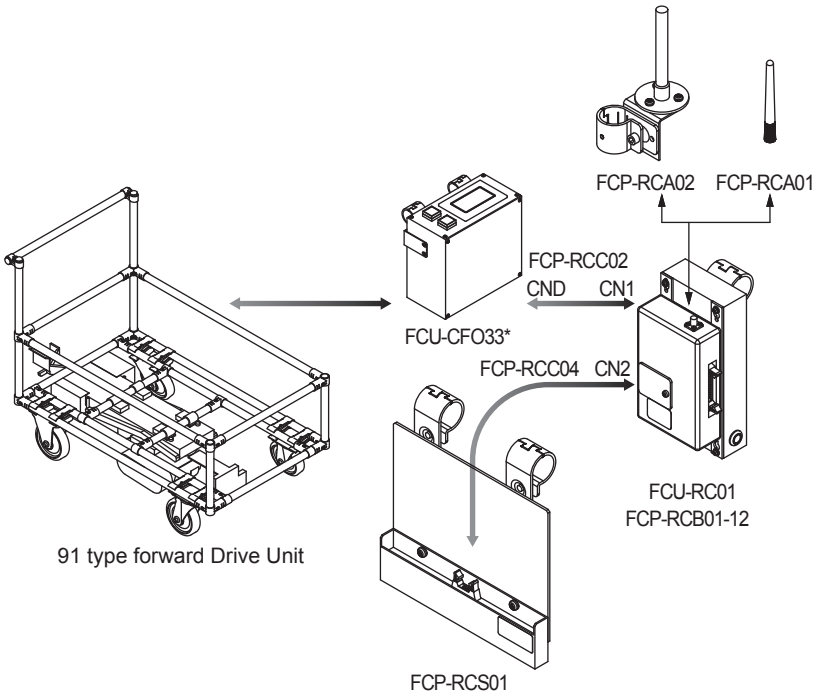

8-3-13. Intersection is not instructed by the course 30 unit, but it is instructed by the RFID antenna when the 12V forward type Drive Unit is used.

◈ Settings

Usable intersection address		1 to 127
Switch settings of wireless intersection module	SW1-1	ON
	SW1-2	OFF
	SW1-3	OFF
	SW1-4	OFF
	SW1-5	OFF
	SW1-6	OFF
	SW1-7	OFF
	SW1-8	OFF
	RSW1 to 3	Create a unique setting for each wireless intersection module that is not duplicated.
	RSW4	Select a usable frequency band.

◈ Configuration

Product name	Model number	Remarks
Wireless Intersection Module	FCU-RC01	
Wireless intersection module box	FCP-RCB01-12	
Pencil type antenna	FCP-RCA01	• Select either antenna depending on the application. • The flanged antenna attenuates the radio wave due to the cable. The communicable distance is shortened approximately 15% when compared to the pencil type antenna. When two wireless units that communicate with each other use the flanged antennas, the communication distance is shortened by approximately 30% due to double effects.
Flanged antenna with bracket	FCP-RCA02	
RFID antenna with bracket	FCP-RCS02	
Cable for course 30	FCP-RCC02	
Cable for RFID antenna	FCP-RCC05	
ID tag	FCP-TAG01	An ID tag corresponding to the intersection is needed.

◈ Connection diagram

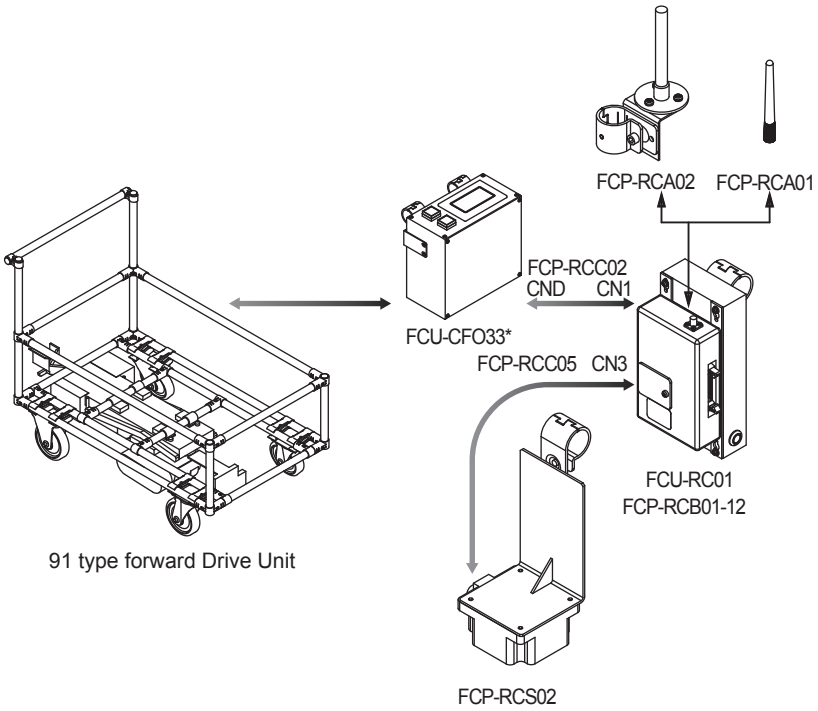

8-3-14. Intersection is instructed by the course 30 unit when the 12V forward/backward type Drive Unit is used.

◈ Settings

Usable intersection address		1 to 15
Switch settings of wireless intersection module	SW1-1	ON
	SW1-2	ON
	SW1-3	OFF
	SW1-4	ON
	SW1-5	OFF
	SW1-6	OFF
	SW1-7	OFF
	SW1-8	OFF
	RSW1 to 3	Create a unique setting for each wireless intersection module that is not duplicated.
	RSW4	Select a usable frequency band.

◈ Configuration

Product name	Model number	Remarks
Wireless Intersection Module	FCU-RC01	
Wireless intersection module box	FCP-RCB01-12	
Pencil type antenna	FCP-RCA01	• Select either antenna depending on the application. • The flanged antenna attenuates the radio wave due to the cable. The communicable distance is shortened approximately 15% when compared to the pencil type antenna. When two wireless units that communicate with each other use the flanged antennas, the communication distance is shortened by approximately 30% due to double effects.
Flanged antenna with bracket	FCP-RCA02	
Cable for course 30	FCP-RCC02	

◈ Connection diagram

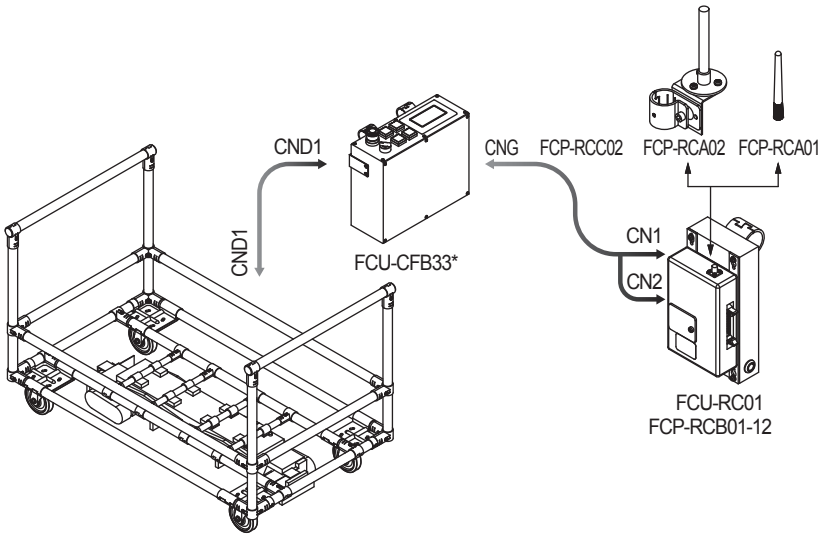

91 type forward/backward Drive Unit

8-3-15. Intersection is not instructed by the course 30 unit, but it is instructed by the address sensor when the 12V forward/backward type Drive Unit is used.

◈ Settings

Usable intersection address		1 to 62
Switch settings of wireless intersection module	SW1-1	OFF
	SW1-2	OFF
	SW1-3	OFF
	SW1-4	OFF
	SW1-5	OFF
	SW1-6	OFF
	SW1-7	OFF
	SW1-8	OFF
	RSW1 to 3	Create a unique setting for each wireless intersection module that is not duplicated.
	RSW4	Select a usable frequency band.

◈ Configuration

Product name	Model number	Remarks
Wireless Intersection Module	FCU-RC01	
Wireless intersection module box	FCP-RCB01-12	
Pencil type antenna	FCP-RCA01	• Select either antenna depending on the application. • The flanged antenna attenuates the radio wave due to the cable. The communicable distance is shortened approximately 15% when compared to the pencil type antenna. When two wireless units that communicate with each other use the flanged antennas, the communication distance is shortened by approximately 30% due to double effects.
Flanged antenna with bracket	FCP-RCA02	
Address sensor with bracket	FCP-RCS01	
Cable for course 30	FCP-RCC02	
Cable for address sensor	FCP-RCC04	
Address magnetic plate	FCP-SMG01-*	An address magnetic plate corresponding to the intersection is needed.

◈ Connection diagram

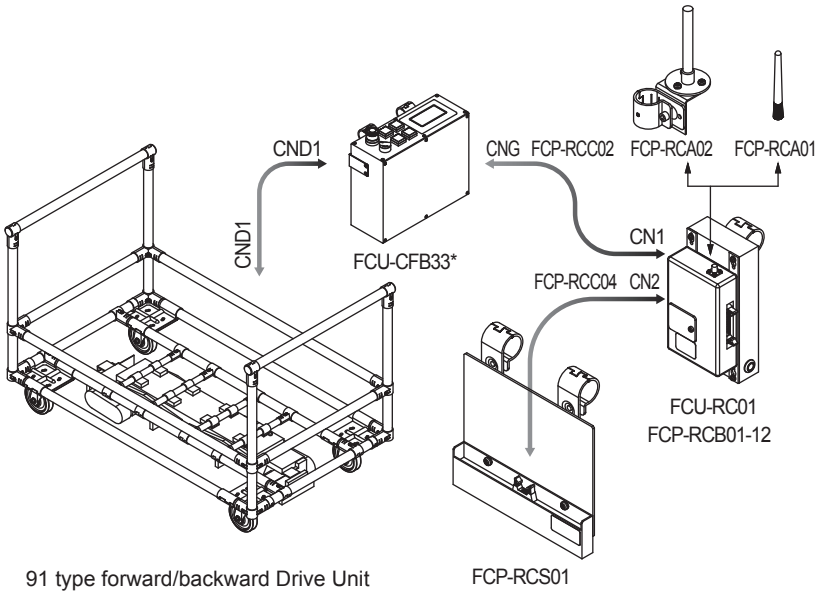

8-3-16. Intersection is not instructed by the course 30 unit, but it is instructed by the RFID antenna when the 12V forward/backward type Drive Unit is used.

◈ Settings

Usable intersection address		1 to 127
Switch settings of wireless intersection module	SW1-1	ON
	SW1-2	OFF
	SW1-3	OFF
	SW1-4	OFF
	SW1-5	OFF
	SW1-6	OFF
	SW1-7	OFF
	SW1-8	OFF
	RSW1 to 3	Create a unique setting for each wireless intersection module that is not duplicated.
	RSW4	Select a usable frequency band.

◈ Configuration

Product name	Model number	Remarks
Wireless Intersection Module	FCU-RC01	
Wireless intersection module box	FCP-RCB01-12	
Pencil type antenna	FCP-RCA01	• Select either antenna depending on the application. • The flanged antenna attenuates the radio wave due to the cable. The communicable distance is shortened approximately 15% when compared to the pencil type antenna. When two wireless units that communicate with each other use the flanged antennas, the communication distance is shortened by approximately 30% due to double effects.
Flanged antenna with bracket	FCP-RCA02	
RFID antenna with bracket	FCP-RCS02	
Cable for course 30	FCP-RCC02	
Cable for RFID antenna	FCP-RCC05	
ID tag	FCP-TAG01	An ID tag corresponding to the intersection is needed.

◈ Connection diagram

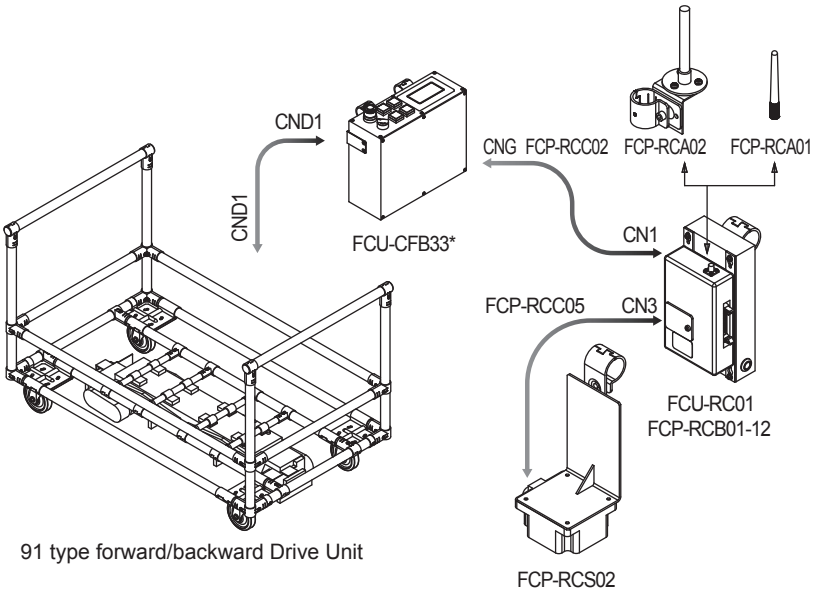

8-3-17. Intersection is instructed by the address sensor when the small Drive Unit is used.

◈ Settings

Usable intersection address		1 to 62
Switch settings of wireless intersection module	SW1-1	OFF
	SW1-2	OFF
	SW1-3	OFF
	SW1-4	OFF
	SW1-5	OFF
	SW1-6	OFF
	SW1-7	OFF
	SW1-8	OFF
	RSW1 to 3	Create a unique setting for each wireless intersection module that is not duplicated.
	RSW4	Select a usable frequency band.

◈ Configuration

Product name	Model number	Remarks
Wireless Intersection Module	FCU-RC01	
Wireless intersection module box	FCP-RCB01-12	
Pencil type antenna	FCP-RCA01	• Select either antenna depending on the application. • The flanged antenna attenuates the radio wave due to the cable. The communicable distance is shortened approximately 15% when compared to the pencil type antenna. When two wireless units that communicate with each other use the flanged antennas, the communication distance is shortened by approximately 30% due to double effects.
Flanged antenna with bracket	FCP-RCA02	
Address sensor with bracket for small Drive Unit	FCP-RCS03	
Cable for small Drive Unit	FCP-RCC03	
Cable for address sensor	FCP-RCC04	
Address magnetic plate	FCP-SMG01-*	An address magnetic plate corresponding to the intersection is needed.

◈ Connection diagram

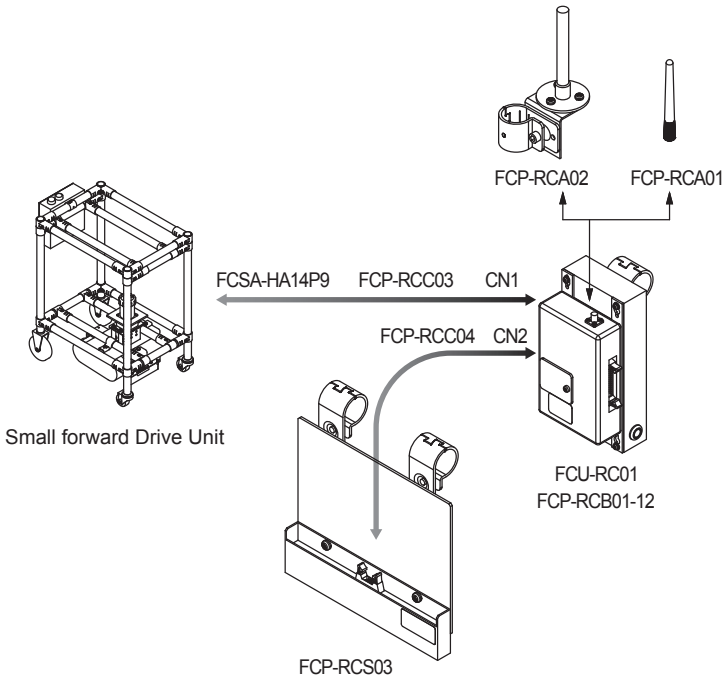

8-3-18. Intersection is instructed by the RFID antenna when the small Drive Unit is used.

◈ Settings

Usable intersection address		1 to 127
Switch settings of wireless intersection module	SW1-1	ON
	SW1-2	OFF
	SW1-3	OFF
	SW1-4	OFF
	SW1-5	OFF
	SW1-6	OFF
	SW1-7	OFF
	SW1-8	OFF
	RSW1 to 3	Create a unique setting for each wireless intersection module that is not duplicated.
	RSW4	Select a usable frequency band.

◈ Configuration

Product name	Model number	Remarks
Wireless Intersection Module	FCU-RC01	
Wireless intersection module box	FCP-RCB01-12	
Pencil type antenna	FCP-RCA01	• Select either antenna depending on the application. • The flanged antenna attenuates the radio wave due to the cable. The communicable distance is shortened approximately 15% when compared to the pencil type antenna. When two wireless units that communicate with each other use the flanged antennas, the communication distance is shortened by approximately 30% due to double effects.
Flanged antenna with bracket	FCP-RCA02	
RFID antenna with bracket for small Drive Unit	FCP-RCS04	
Cable for small Drive Unit	FCP-RCC03	
Cable for RFID antenna	FCP-RCC05	
ID tag	FCP-TAG01	An ID tag corresponding to the intersection is needed.

◈ Connection diagram

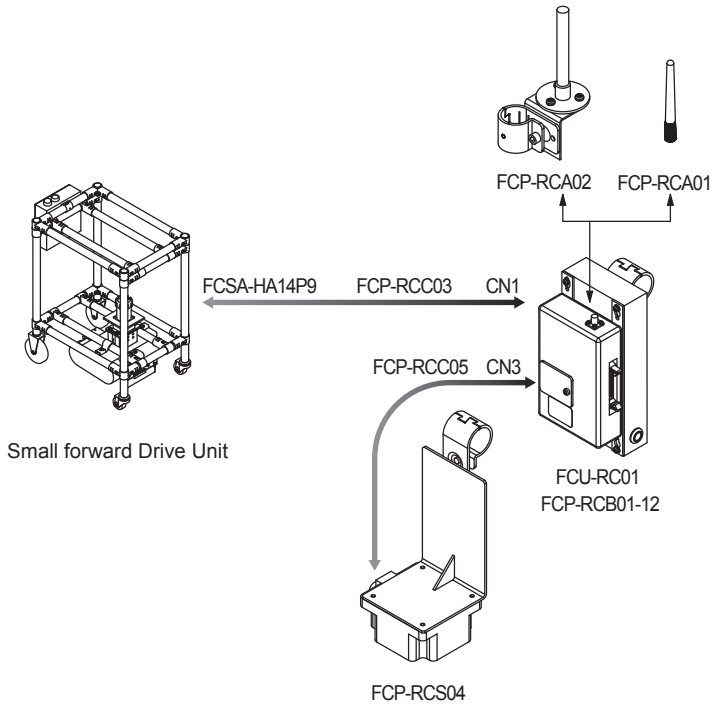

8-3-19. Intersection control is performed using the ground station.

To perform the intersection control using the ground station, the AGVs are built in accordance with the configuration described previously and the parameters need to be set for each wireless intersection module.

◈ Settings

Switch settings of wireless intersection module	SW1-1	OFF
	SW1-2	ON
	SW1-3	OFF
	SW1-4	OFF
	SW1-5	OFF
	SW1-6	OFF
	SW1-7	OFF
	SW1-8	OFF
	RSW1 to 3	Create a unique setting for each ground station so that it is not duplicated. Setting range, 900 to 999
	RSW4	Select a usable frequency band.

◈ Configuration

Product name	Model number	Remarks
Wireless Intersection Module	FCU-RC01	
Wireless intersection module mounting bracket	FCP-RCK06	• Select either antenna depending on the application.
Wireless intersection module mounting bracket	FCP-RCK07	
Pencil type antenna	FCP-RCA01	• Select either antenna depending on the application. • The flanged antenna attenuates the radio wave due to the cable. The communicable distance is shortened approximately 15% when compared to the pencil type antenna. When two wireless units that communicate with each other use the flanged antennas, the communication distance is shortened by approximately 30% due to double effects.
Flanged antenna with bracket	FCP-RCA02	
AC adapter	FCP-RCP01	For supplying the power to the wireless intersection module

◈ Connection diagram

Connecting the AC adapter FCP-RCP01 to the CN1 connector of the wireless intersection module supplies the power.

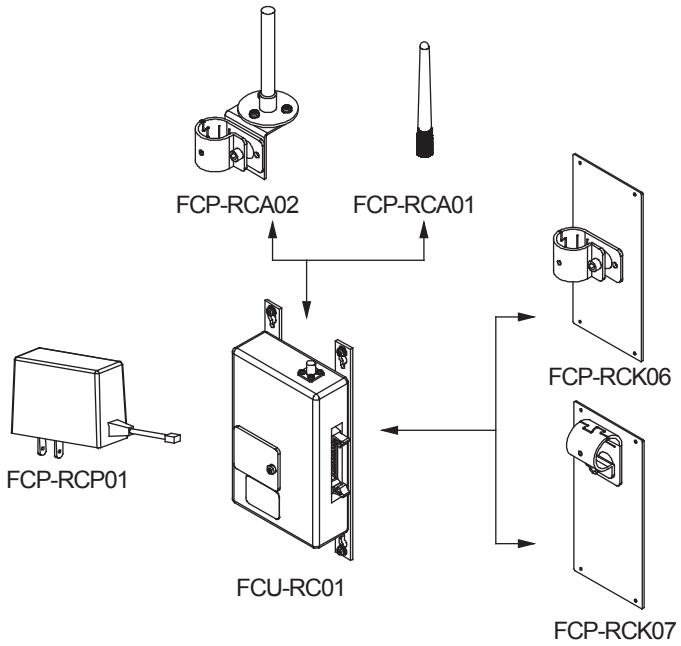

9. Intersection

The address sensor, RFID antenna, or course 30 unit reads the address magnetic plate or ID tag or the external operation command of the course 30 unit is output to instruct the intersection entrance or exit to the wireless intersection module.

When the address sensor and RFID antenna are used, it is always necessary to stop the AGV before the intersection using the command tape or count tape.

9-1. For address sensor

9-1-1. Layout of address magnetic plate

Affix the address magnetic plate to a position that is different from the command tape and the count tape so that these are recognized correctly. In addition, affix the magnetic plate to a position where the drive wheels of the Drive Unit or the casters of the dolly cart do not run over the magnetic plate as much as possible.

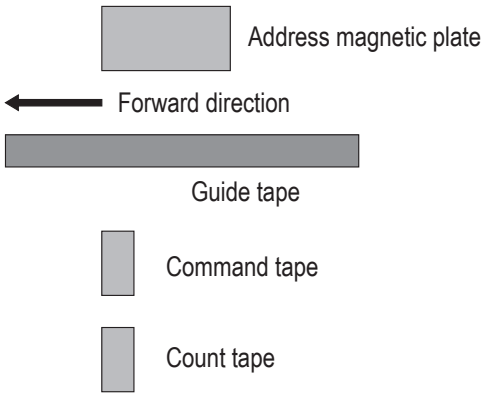

Figure. Positional relationship of each tape (1)

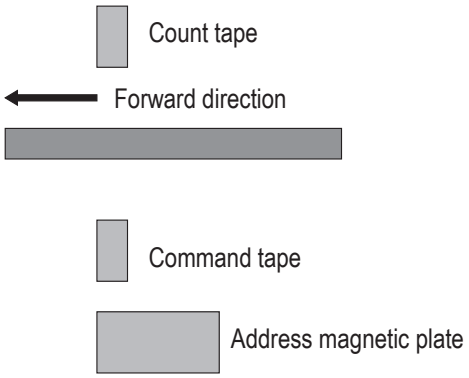

Figure. Positional relationship of each tape (2)

9-1-2. Installation of address sensor

Install the address sensor so that its detection surface is located at a position 25 mm to 30 mm above the ground.

Install the address sensor at a position where it does not interfere with the guide sensor or counter sensor position of the Drive Unit.

Install the address sensor at a position away from a device (motor, etc.) that generates magnetism.

In addition, when there is a ferromagnetic substance such as iron near the address sensor, this may affect the detection sensitivity. In this case, provide a space around the address sensor.

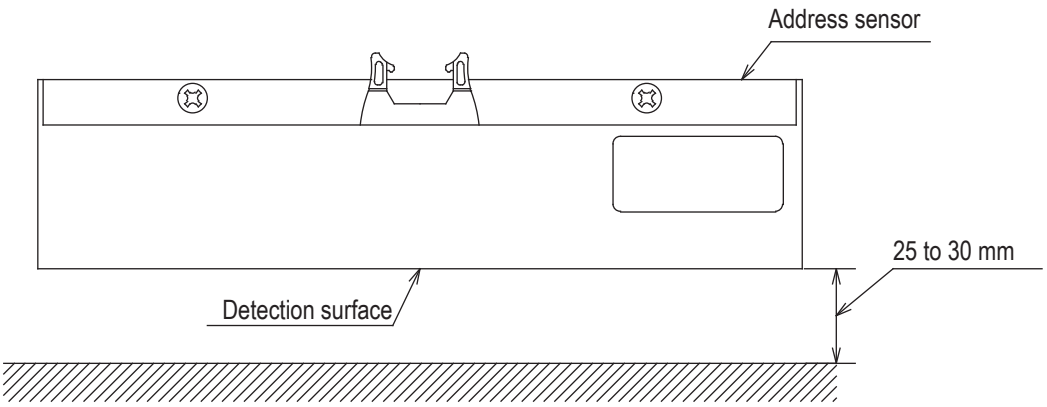

Figure. Detection distance

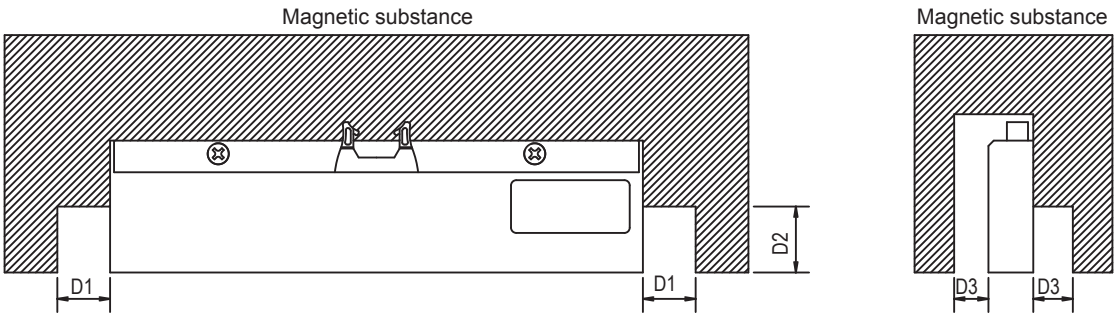

D1: 40 mm or more
D2: 30 mm or more
D3: 40 mm or more

Figure. Installation position

9-1-3. Detection direction of address sensor

The figure below shows the relationship between the address sensor and address magnetic plate.

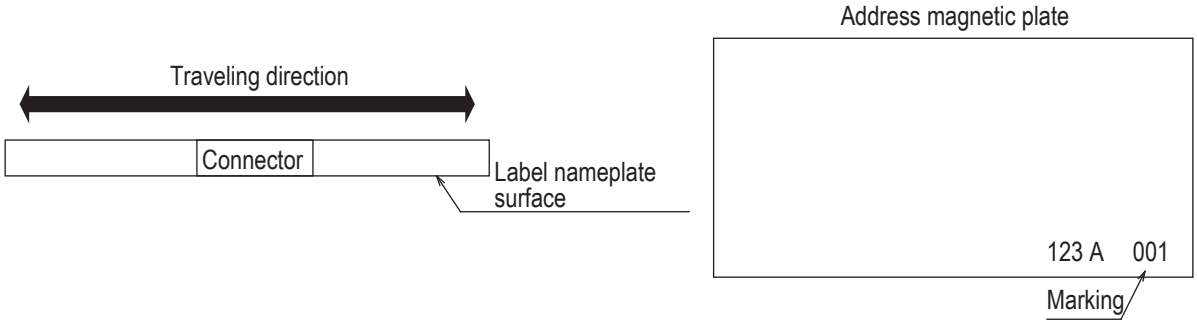

Figure. Detection direction

9-1-4. About installation of address magnetic plate

When installing the address magnetic plates close to each other, be sure to install them 300 mm away from each other.

Otherwise, the adjacent address magnetic plate may be detected.

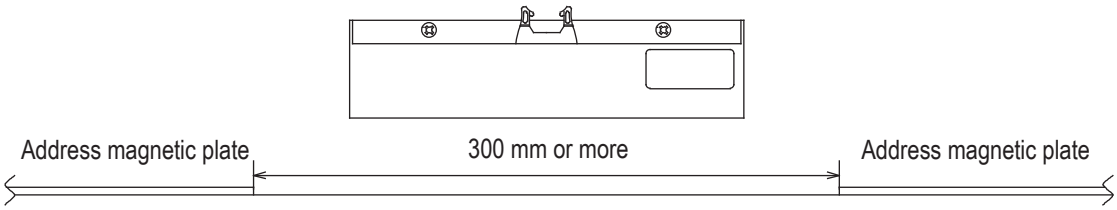

Figure. Clearance between address magnetic plates

9-1-5. Forward type

To make the AGV recognize the intersection entrance, affix the address magnetic plate corresponding to the intersection address to a position where the address sensor can read it. (This description uses intersection address 1.)
Next, affix the command tape or count tape to a position where the stop command is instructed to the AGV. Make the AGV read the address magnetic plate, and then recognize the stop command (stop count) after 100 ms. or longer. Whether the approach to the intersection is permitted or not is determined upon completion of checking specified by the monitoring time for permission to approach the intersection and radio transmission count for checking the object approaching the intersection.
After that, to make the AGV recognize the intersection exit, affix the address magnet (intersection address 0) that clears the intersection address.
Install the address sensor so that it reads the address magnetic plate vertically to the traveling direction.
When there is an AGV that is passing through the intersection, the AGV remains stopped by the command tape or count tape. When the wireless intersection module installed on the AGV that is passing through the intersection recognizes the intersection exit, it travels again.

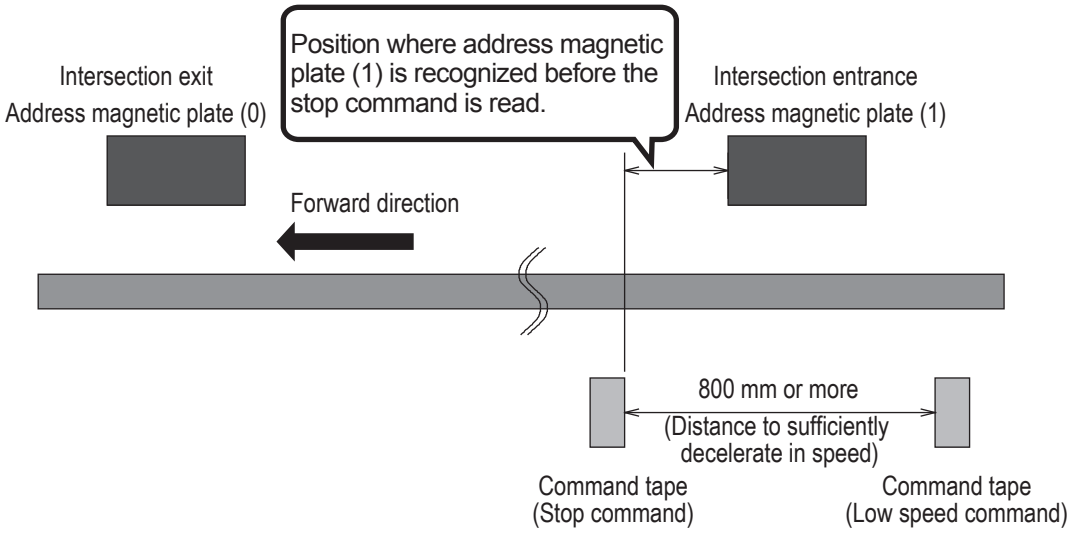

Figure. Installation of address magnetic plates using command tapes

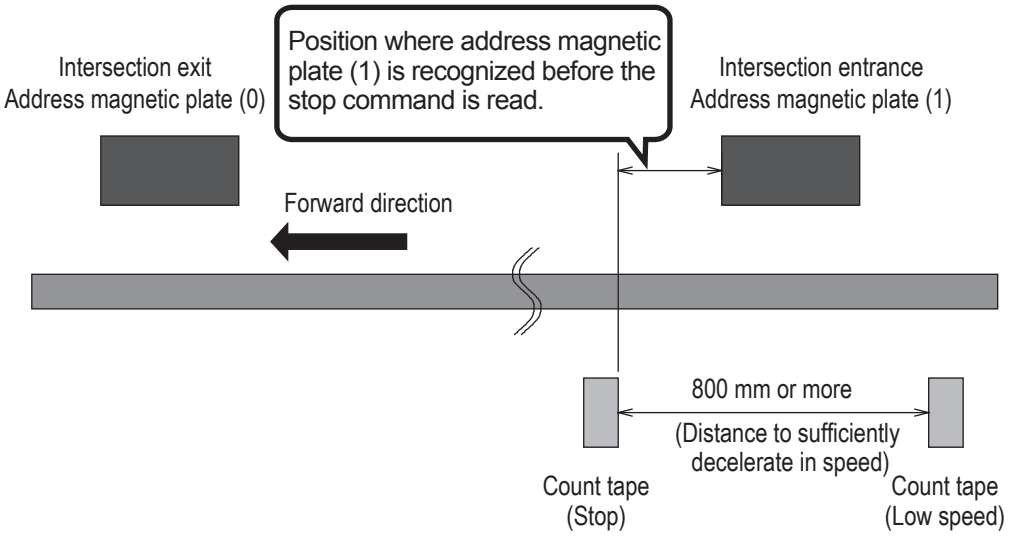

Figure. Installation of address magnetic plates using count tapes

9-1-6. Forward/backward type

When the address magnetic plate is used for the forward/backward type AGV, it is necessary to read out the address magnetic plate during forward or backward travel.

The address sensor reads the address magnetic plate in the longitudinal direction.

The address magnetic plate can be read in either direction.

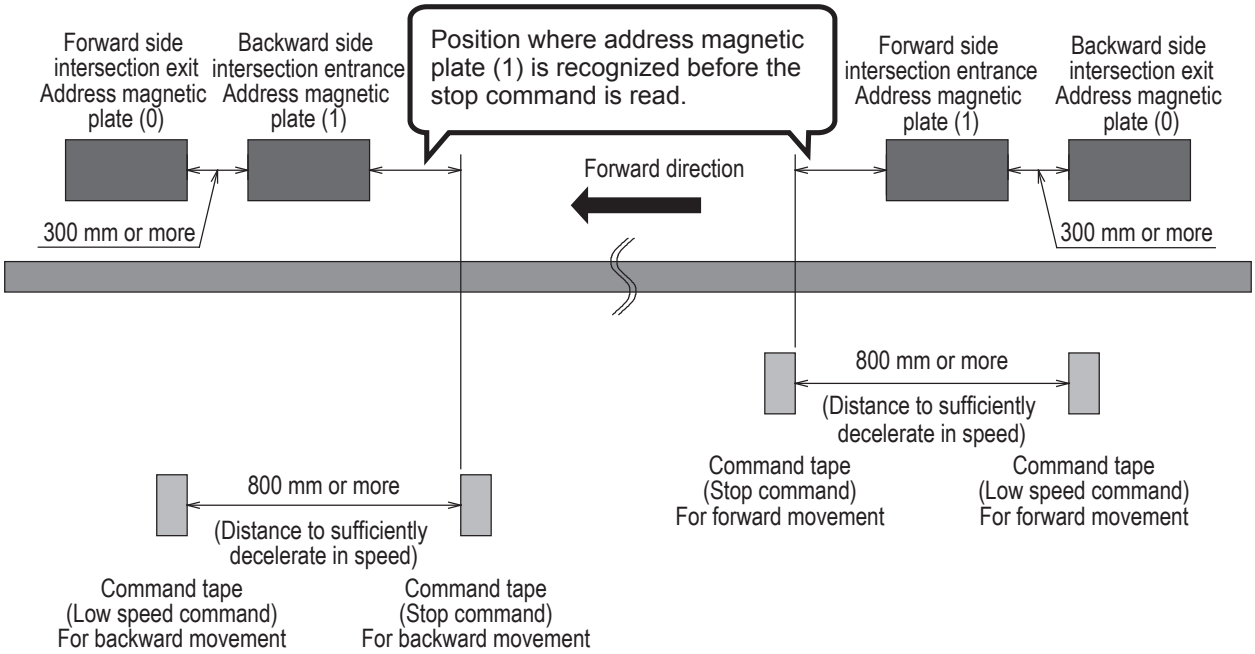

Figure. Installation of address magnetic plates using command tapes

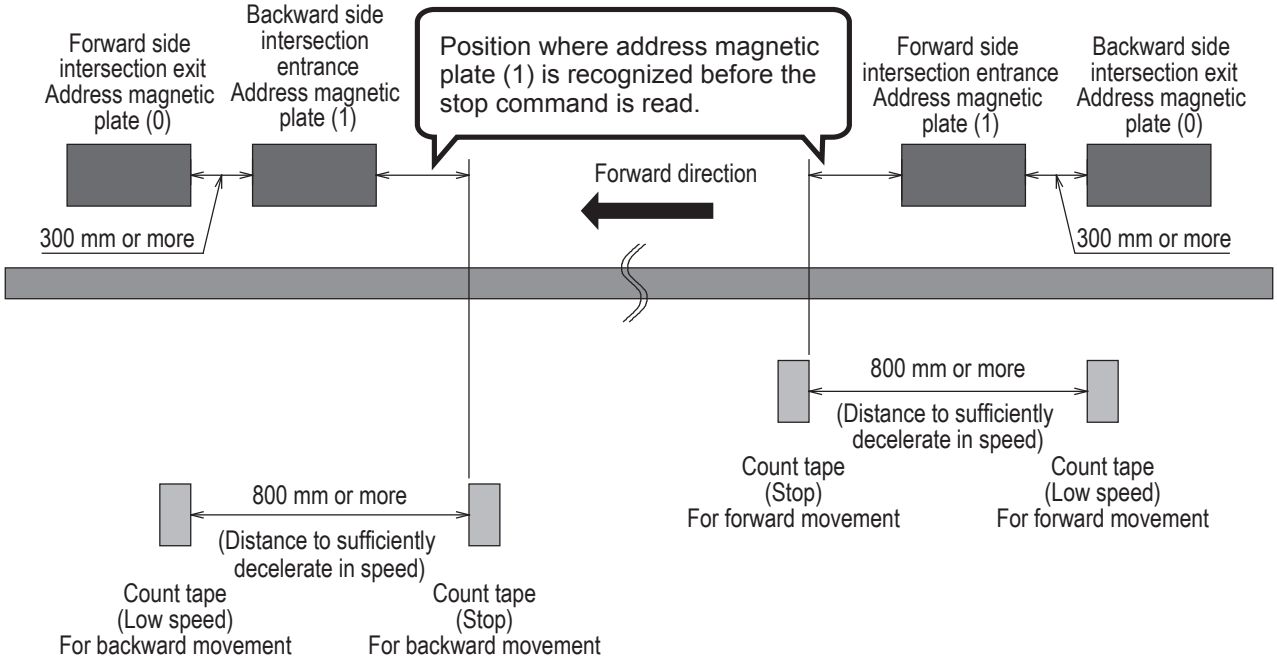

Figure. Installation of address magnetic plates using count tapes

9-1-7. Timing chart

◈ AGV (1) is passing and AGV (2) is waiting at intersection address (1).

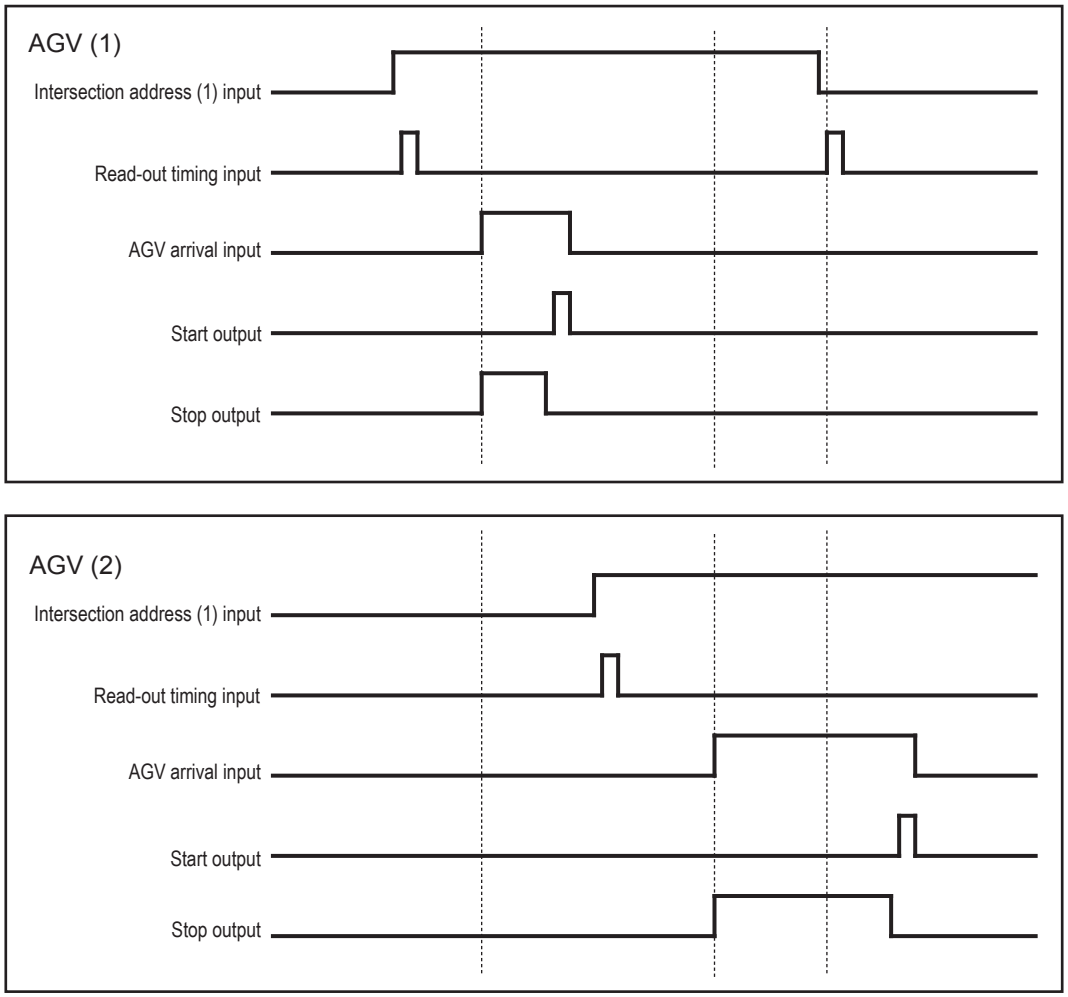

The waiting wireless intersection module cannot check the communication of the wireless intersection module that is passing through the intersection. The waiting wireless intersection module enters the passing status upon completion of checking specified by the monitoring time for permission to approach the intersection and radio transmission count for checking the object approaching the intersection.

For the intersection control using the ground station, when the ground station cannot check the communication of the wireless intersection module that is passing through the intersection within the AGV communication error judgment time of the ground station, the waiting wireless intersection module is set to the passing status.

9-2. For RFID antenna

9-2-1. Layout of ID tag

Affix the ID tag to a position where the drive wheels of the Drive Unit or the casters of the dolly cart do not run over the ID tag. Do not affix the ID tag to any metallic part. Doing so may affect the read-out.

9-2-2. Installation of RFID antenna

Install the RFID antenna so that its detection surface is located at a position 25 mm to 30 mm above the ground.

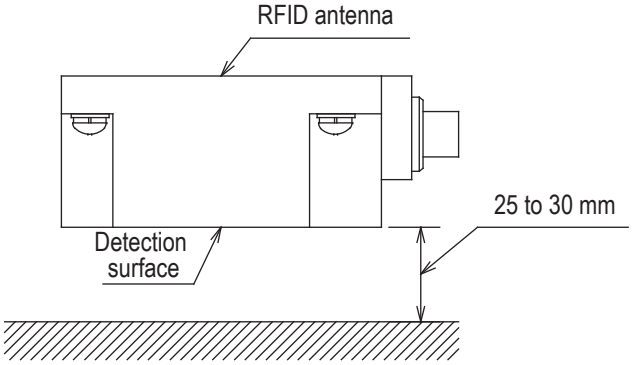

Figure. Detection distance

9-2-3. Forward type

To make the AGV recognize the intersection entrance, affix the ID tag corresponding to the intersection address to a position where the RFID antenna can read out the intersection address. (This description uses intersection address 1.)
Next, affix the command tape or count tape to a position where the stop command is instructed to the AGV.
Affix the command tape or count tape so that the AGV reads the ID tag, and then recognizes the stop command (stop count) after 100 ms or longer. Whether the approach to the intersection is permitted or not is determined upon completion of checking specified by the monitoring time for permission to approach the intersection and radio transmission count for checking the object approaching the intersection. After that, to make the AGV recognize the intersection exit, affix the ID tag (intersection address 0) that clears the intersection address.
When there is an AGV that is passing through the intersection, the AGV remains stopped by the command tape or count tape. When the wireless intersection module installed on the AGV that is passing through the intersection recognizes the intersection exit, it travels again.

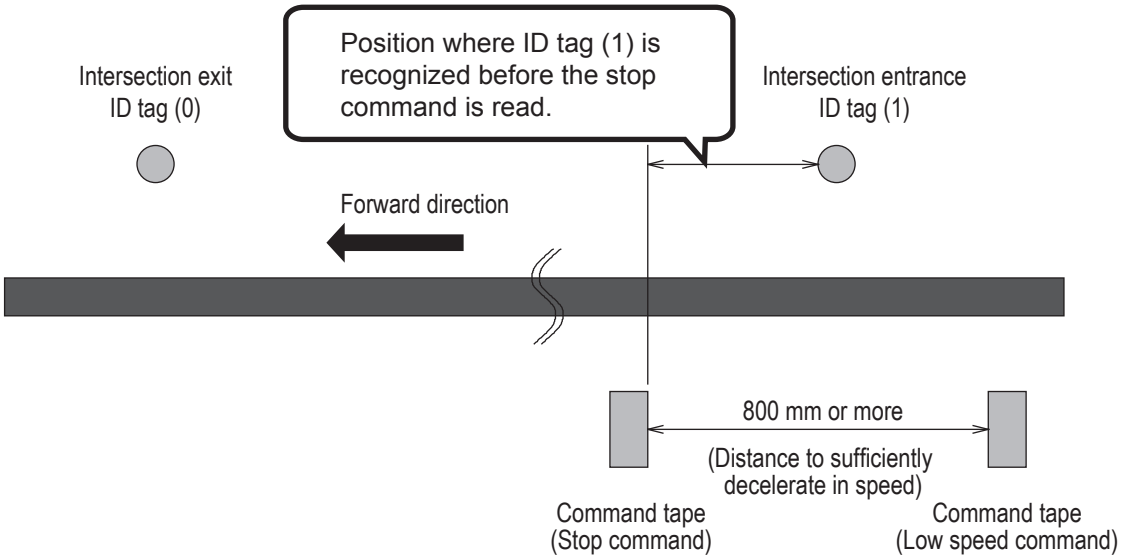

Figure. Installation of ID tag using command tapes

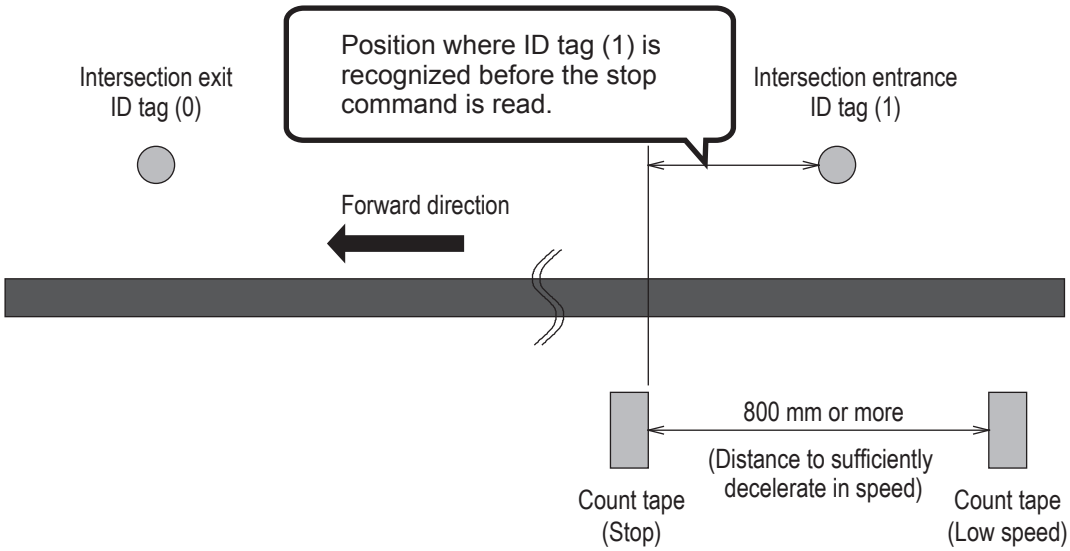

Figure. Installation of ID tag using count tapes

9-2-4. Forward/backward type

When the ID tag is used for the forward/backward AGV, it is necessary to read the ID tag during forward or backward travel.

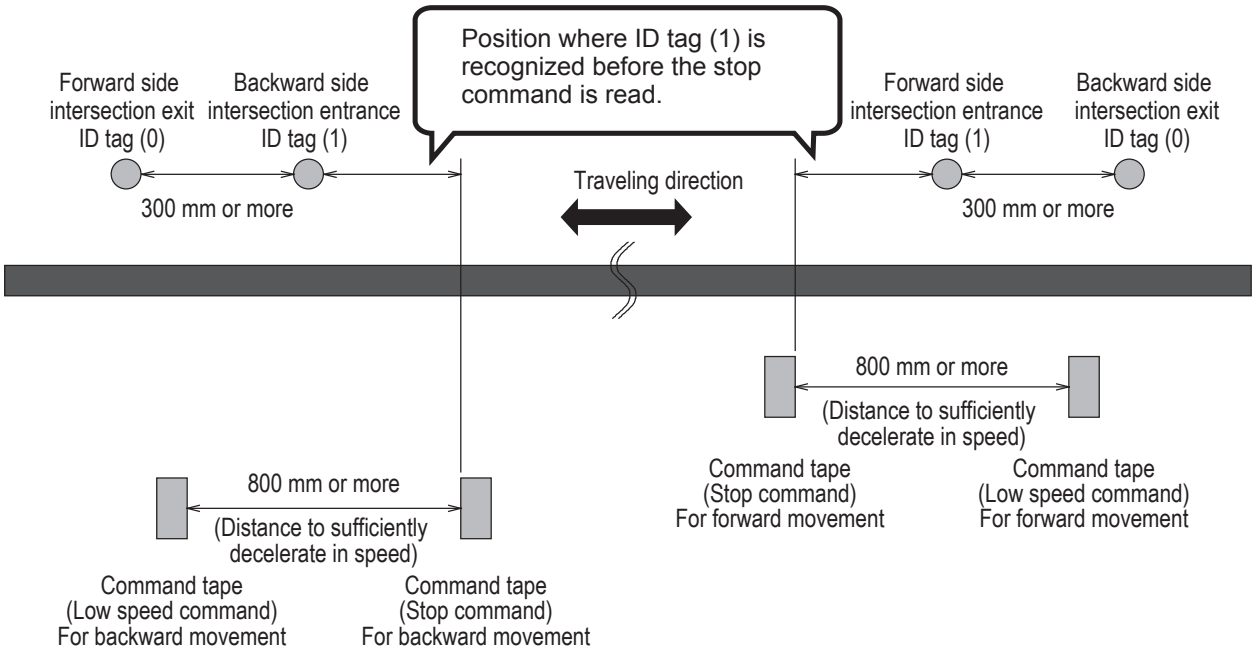

Figure. Installation of ID tag using command tapes

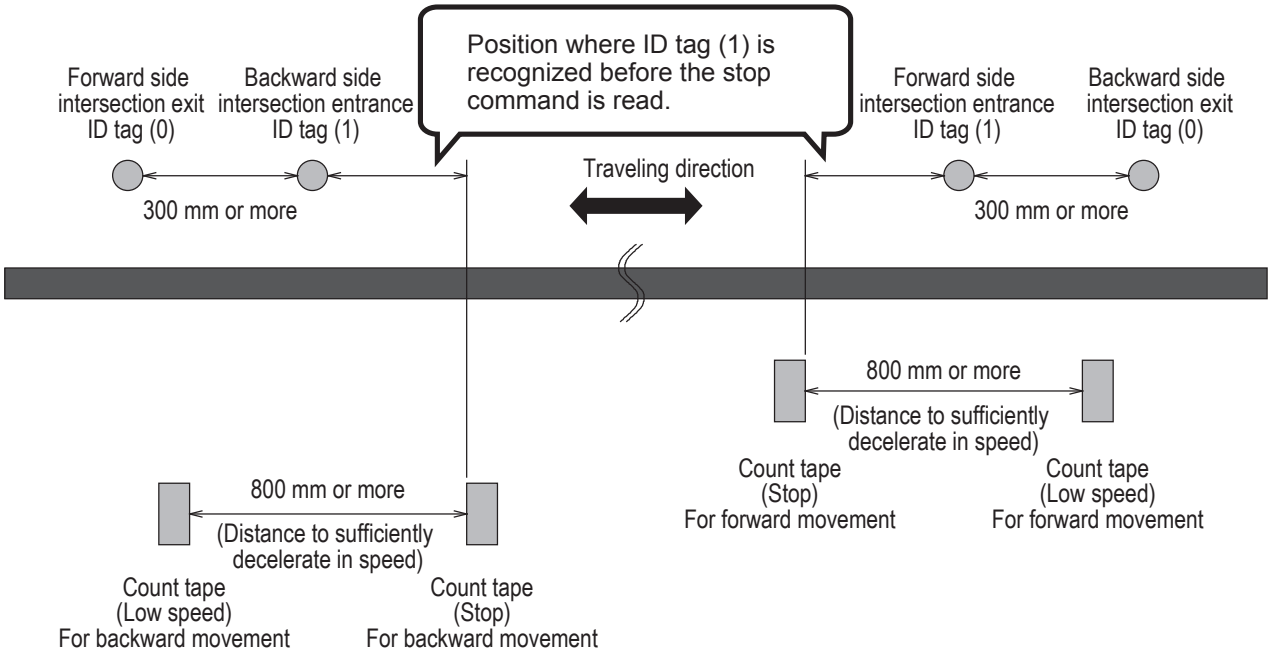

Figure. Installation of ID tag using count tapes

9-2-5. Timing chart

◈ AGV (1) is passing and AGV (2) is waiting at intersection address (1).

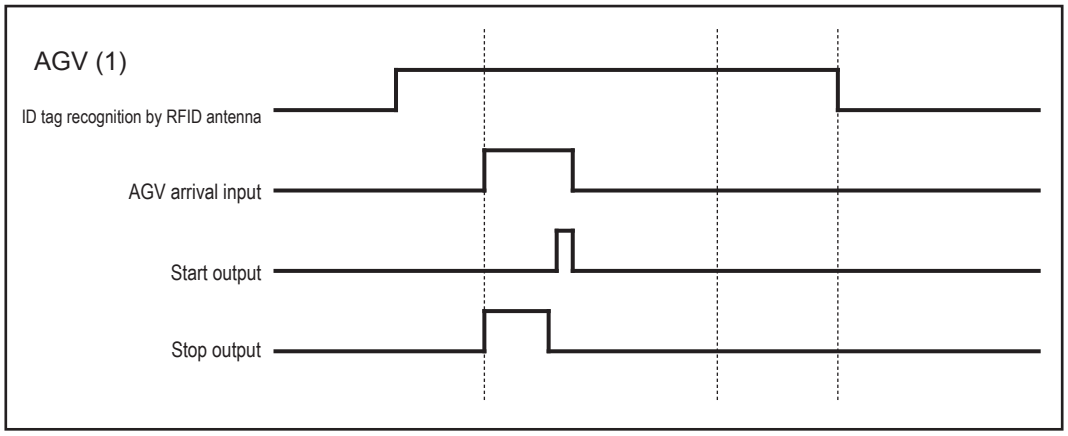

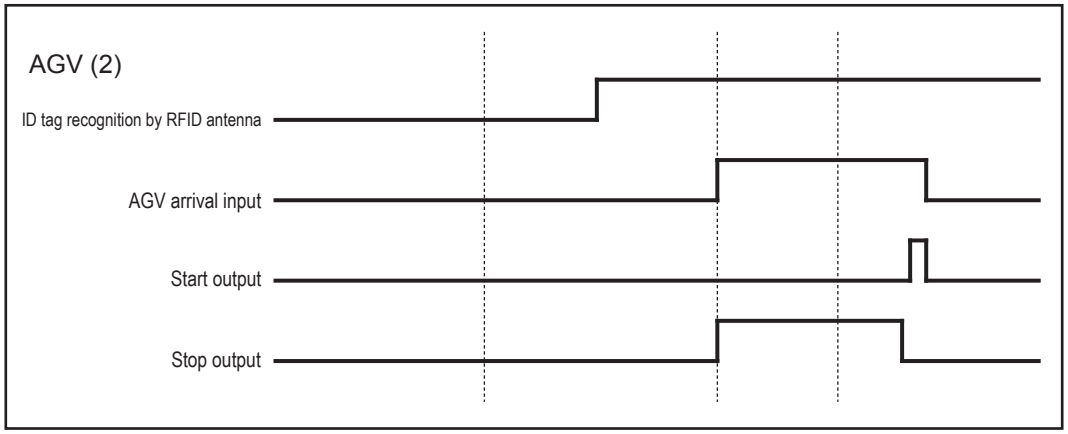

The waiting wireless intersection module cannot check the communication of the wireless intersection module that is passing through the intersection. The waiting wireless intersection module enters the passing status upon completion of checking specified by the monitoring time for permission to approach the intersection and radio transmission count for checking the object approaching the intersection.

For the intersection control using the ground station, when the ground station cannot check the communication of the wireless intersection module that is passing through the intersection within the AGV communication error judgment time of the ground station, the waiting wireless intersection module is set to the passing status.

9-3. For course 30 unit

To make the course 30 unit recognize the intersection entrance or exit, use the external operation command 1 to 5 outputs. When the wireless intersection module is used for the course 30 unit, the software of the course 30 unit needs to be updated to the latest version.

Outputs on course 30 unit	Inputs on wireless intersection module
External operation command 1 output	Intersection inquiry input
External operation command 2 output	Intersection address (1) input
External operation command 3 output	Intersection address (2) input
External operation command 4 output	Intersection address (4) input
External operation command 5 output	Intersection address (8) input

9-3-1. Forward type

(Example) Example to instruct count data

1) Set the speed to a low speed using the count tape that instructs the intersection entrance and turn ON the external operation command 2 to 5 output. (This description uses intersection address 3.)

2) Next, turn ON the external operation command 1 output using the count tape.

First, checking is performed in accordance with the monitoring time for permission to approach the intersection and the radio transmission count for checking the object approaching the intersection. If there is an AGV passing through the intersection, it will be stopped.

When the wireless intersection module installed on the AGV that is passing through the intersection recognizes the intersection exit, it travels again.

3) Next, use the count tape to set the speed to a level at which the AGV enters the intersection.

This count tape also turns ON external operation command 1 and external operation command 2 to 5 output. (This description uses intersection address 3.)

4) Turn OFF external operation command 1 to 5 using the count tape that instructs the intersection exit.

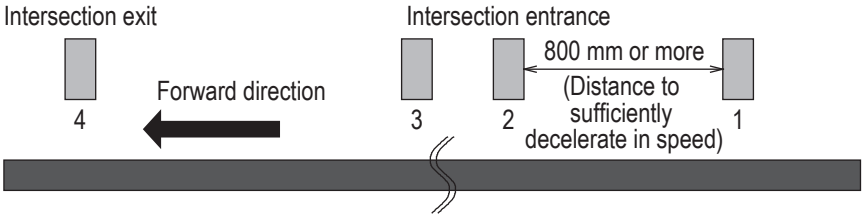

Figure. Installation of count tapes

> ❗ If the intersection positions are changed using the count change operation of the course 30 unit (2nd and 3rd counts in the above example), be careful because the wireless intersection module starts the intersection control and outputs the start command after it determines that the AGV is passing through the intersection.
>
> ❗ A time lag occurs until the wireless intersection module recognizes the intersection, checks the wireless intersection unit that is passing through the intersection, and then it stops. If the AGV speed is fast, the AGV may stop at a position where it interferes with the AGV that is passing through the intersection. Adjust the count position where the intersection inquiry input is turned ON by the external operation command from the course 30 unit to a position without interference where the AGV can stop.

9-3-2. Forward/backward type

(Example) Example to instruct count data

◈ For forward type

1) Set the speed to a low speed using the count tape that instructs the intersection entrance and turn ON the external operation command 2 to 5 output. (This description uses intersection address 3.)

2) Next, turn ON the external operation command 1 output using the count tape. First, checking is performed in accordance with the monitoring time for permission to approach the intersection and the radio transmission count for checking the object approaching the intersection. If there is an AGV passing through the intersection, it will be stopped. When the wireless intersection module installed on the AGV that is passing through the intersection recognizes the intersection exit, the AGV travels again.

3) Next, use the count tape to set the speed to a level at which the AGV enters the intersection. External operation command 1 is turned ON and the external operation command 2 to 5 output is turned ON even at this count. (This description uses intersection address 3.)

4) Turn OFF external operation command 1 to 5 using the count tape that instructs the intersection exit.

◈ For backward type

1) Set the speed to a low speed using the count tape that instructs the intersection entrance and turn ON the external operation command 2 to 5 output. (This description uses intersection address 3.)

010: ▷1 2 3

2) Next, turn ON the external operation command 1 output using the count tape.

First, checking is performed in accordance with the monitoring time for permission to approach the intersection and the radio transmission count for checking the object approaching the intersection. If there is an AGV passing through the intersection, it will be stopped.

When the wireless intersection module installed on the AGV that is passing through the intersection recognizes the intersection exit, the AGV travels again.

011: ▷1 1 2 3

3) Next, use the count tape to set the speed to a level at which the AGV enters the intersection.

This count tape also turns ON external operation command 1 and external operation command 2 to 5 output. (This description uses intersection address 3.)

012: 1 2 3

4) Turn OFF external operation command 1 to 5 using the count tape that instructs the intersection exit.

013:

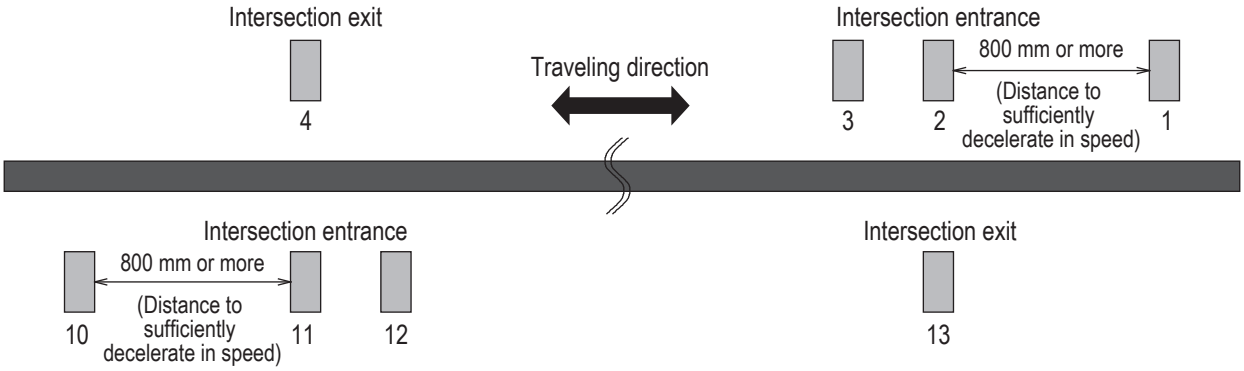

Figure. Installation of count tapes

!	If the intersection positions are changed using the count change operation of the course 30 unit (2nd, 3rd, 11th, and 12th counts in the above example), be careful because the wireless intersection module starts the intersection control and outputs the start command after it determines that the AGV is passing through the intersection.
!	A time lag occurs until the wireless intersection module recognizes the intersection, checks the wireless intersection unit that is passing through the intersection, and then it stops. If the AGV speed is fast, the AGV may stop at a position where it interferes with the AGV that is passing through the intersection. Adjust the count position where the intersection inquiry input is turned ON by the external operation command from the course 30 unit to a position without interference where the AGV can stop.

9-3-3. Timing chart

◈ AGV (3) is passing and AGV (2) is waiting at intersection address (1).

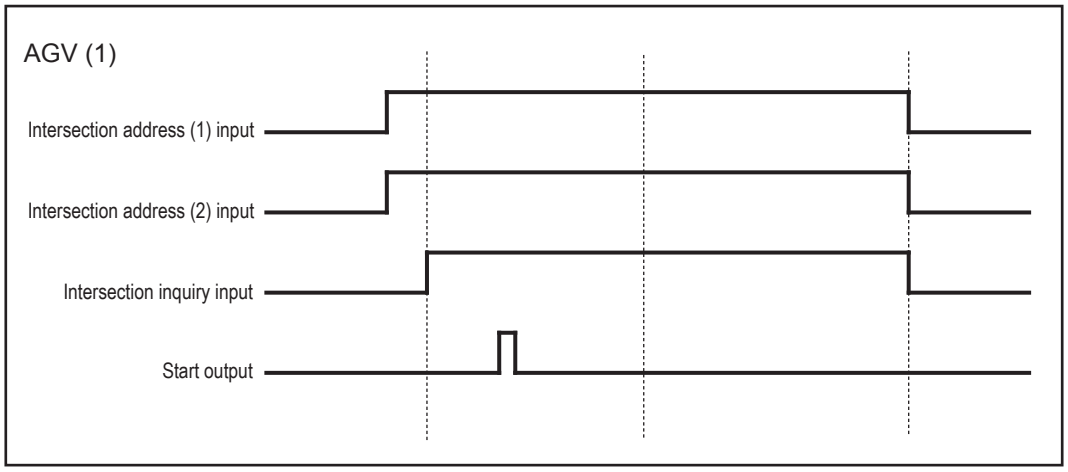

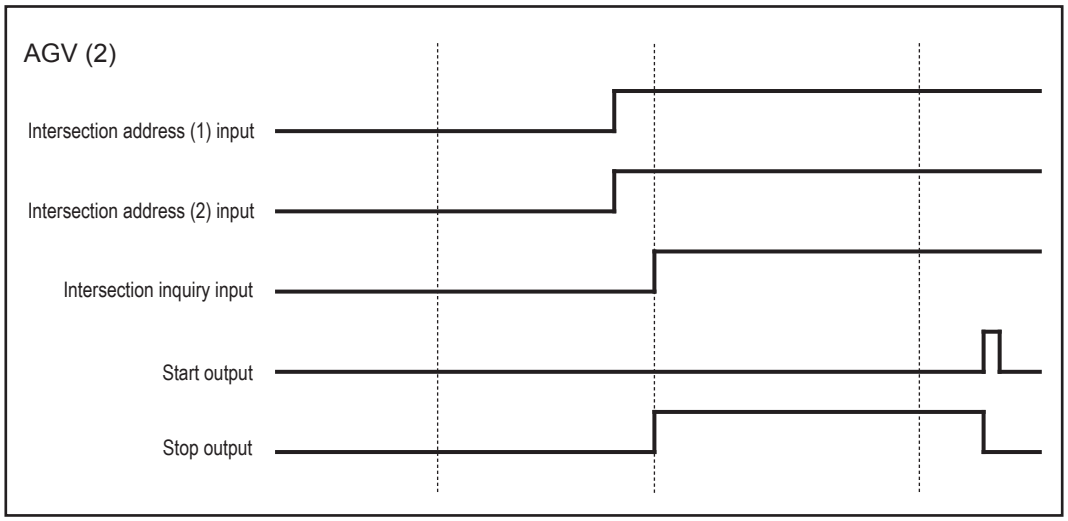

Whether the approach to the intersection is permitted or not is determined upon completion of checking specified by the monitoring time for permission to approach the intersection and the radio transmission count for checking the object approaching the intersection. Even when the AGV travels during this period, adjust the intersection instruction timing from the positional relationship between the AGVs at the intersection.

The waiting wireless intersection module cannot check the communication of the wireless intersection module that is passing through the intersection. The waiting wireless intersection module enters the passing status upon completion of checking specified by the monitoring time for permission to approach the intersection and radio transmission count for checking the object approaching the intersection.

For the intersection control using the ground station, when the ground station cannot check the communication of the wireless intersection module that is passing through the intersection within the AGV communication error judgment time of the ground station, the waiting wireless intersection module is set to the passing status.

9-4. For ground station

When the wireless intersection module performs the intersection control in the ground station mode, it is necessary that the AGV is controlled using the address sensor, RFID antenna, and course 30 unit described previously.

The mutual communication between the wireless units on the AGVs or the communication between the wireless unit on the AGV and the ground station using the set intersection address can be set for the wireless intersection module using the parameter settings of the personal computer.

However, note that one ground station can control up to four intersections.

10. Wireless intersection module parameter settings

The wireless intersection module can perform various settings using the dedicated application.

- ID setting
- One shot pulse width setting
- Frequency CH setting
- Travel priority setting
- Ground station setting
- Trigger setting
- Intersection operation setting
- Initialization
- Save or load settings

> ! After setting the parameters, be sure to turn OFF the power to the module, and then turn it ON again. Otherwise, the settings do not take effect.

10-1. FCU-RC01 setup software FCU-RC01_Set

This software also provides functions used to set the parameters for the wireless intersection module FCU-RC01. Set the parameters using the application “FCU-RC01_Set”.
Connect the personal computer and wireless intersection module using the wireless intersection module setting cable FCP-RCC08. Connect the D-sub 9-pin connector to the serial port of the personal computer and the XHP-3 connector to the CN3 parameter setting connector of the wireless intersection module.

10-1-1. Operating conditions for FCU-RC01 setup software

- Windows XP/Vista/7
- A serial port is required.

(A USB serial converter can be used. However, some converters may not support the communication.)

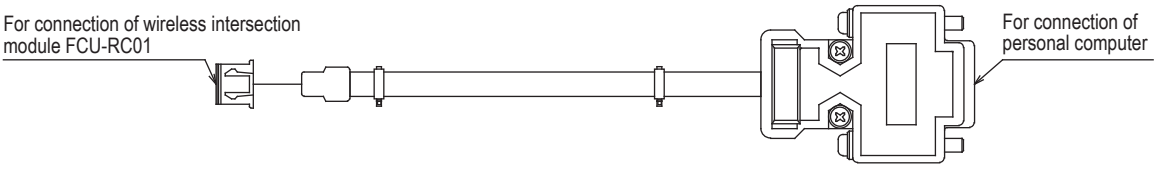

Figure. Wireless intersection module setting cable FCP-RCC08

10-1-2. Basic screen, and part names and functions

◈ Basic screen

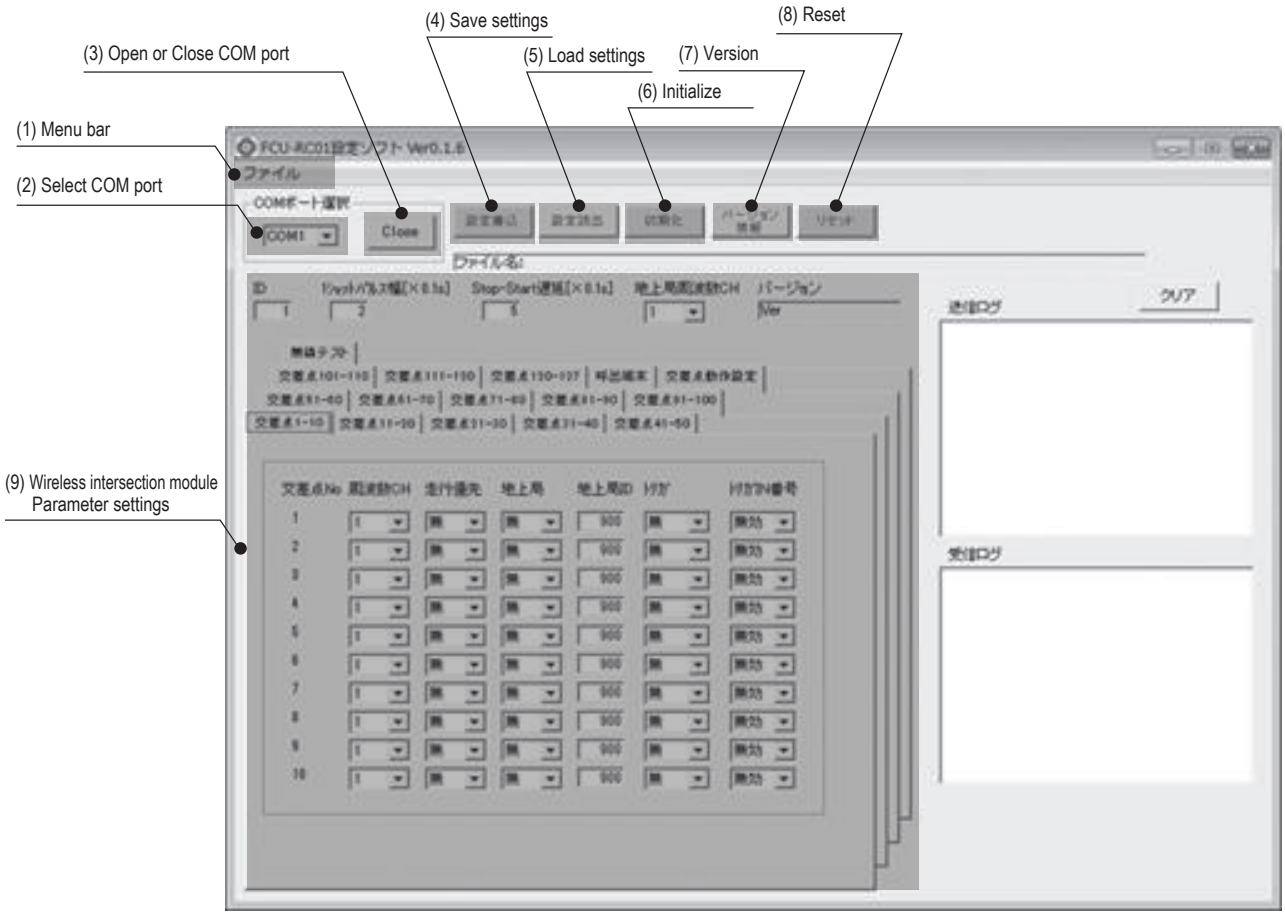

No.	Name	Contents
1	Menu bar	Menu commands related to the file saving and loading. You can save or load the contents of the parameter settings.
2	Select COM port	Allows you to select a RS-232C port of the personal computer.
3	Open or Close COM port	Opens or closes a RS-232C port of the personal computer.
4	Save settings	Saves the settings of the wireless intersection module.
5	Load settings	Loads the settings of the wireless intersection module.
6	Initialization	Initializes the settings of the wireless intersection module.
7	Version	Reads out the software version of the wireless intersection module.
8	Reset	Resets the wireless intersection module. Resets to the status immediately after power ON.
9	Wireless Intersection Module parameter settings	Allows you to set various parameters.

◈ Wireless intersection module parameter settings

No.	Name	Contents
1	ID	Allows you to set the ID of the wireless intersection module. It is necessary to set the rotary switches RSW 1 to 3 to 0.
2	One shot pulse width	Allows you to set the one-shot width of the signal to be output by the start output in the address sensor mode or RFID mode, or the start output or stop output in the external control mode.
3	Stop-Start delay	Allows you to set the timing delay time from the stop output OFF to start output ON sent from the wireless intersection module in the address sensor mode or RFID mode.
4	Ground station frequency CH	Allows you to set the ground station frequency CH. It is necessary to set the rotary switch RSW4 on the ground station to 0.
5	Version	Displays the software version of the wireless intersection module.

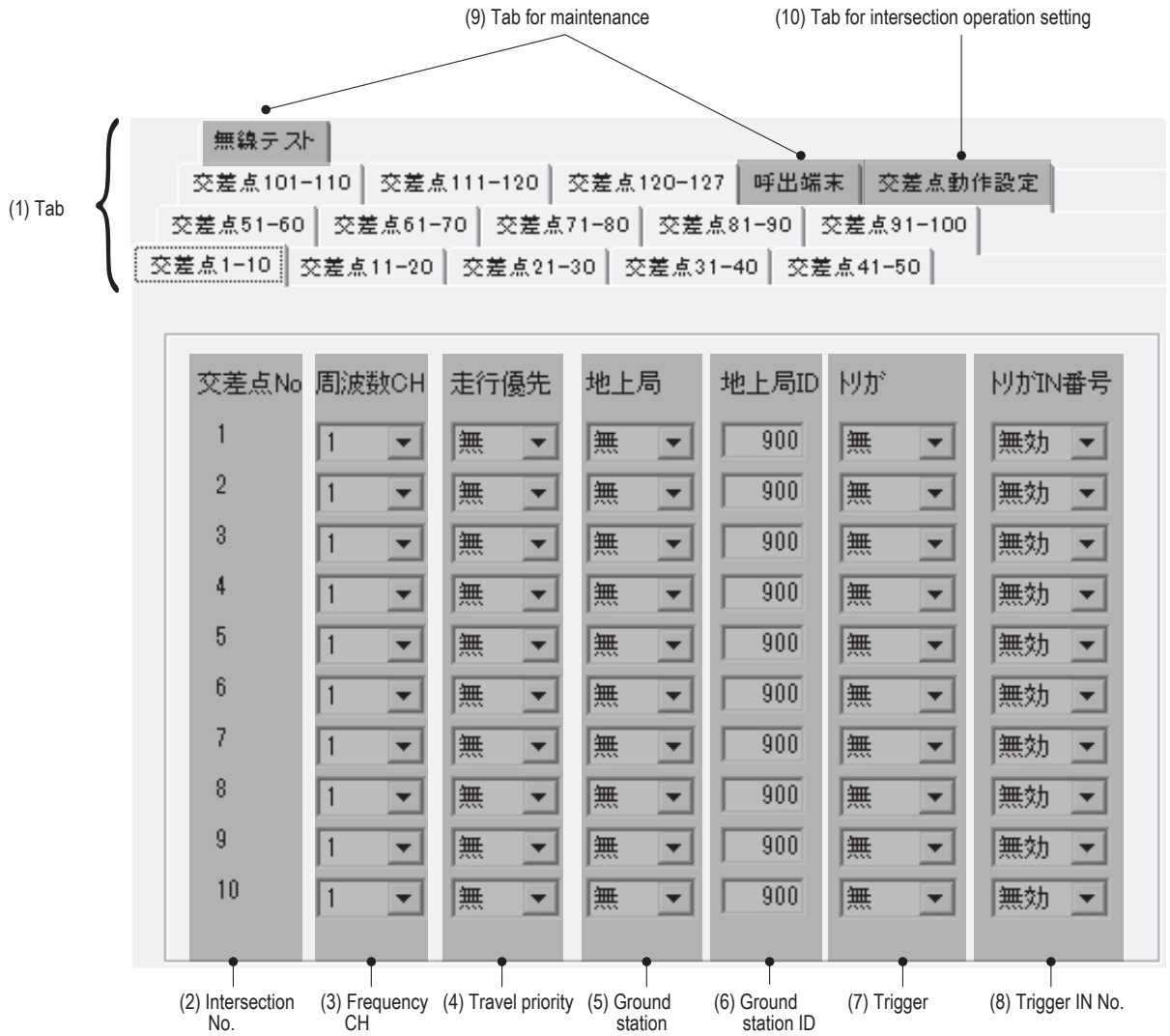

No.	Name	Contents
1	Tab	Tab for each intersection group.
2	Intersection No.	Intersection address (No.) of each intersection.
3	Frequency CH	The communication can be performed from the frequency CH selected for each intersection. It is necessary to set the rotary switch RSW4 to 0.
4	Travel priority	The stop output signal is not sent from the wireless intersection module and the pause output signal is sent. When passing through the intersection is permitted, the pause output signal is turned OFF.
5	Ground station	Allows you to set the intersection control using the ground station enabled or disabled.
6	Ground station ID	Allows you to set the ID of the ground station that performs the intersection control at each intersection.
7	Trigger	This must be set with the trigger IN No. at the same time.
8	Trigger IN No.	This must be set with the trigger at the same time. The wireless intersection module waits until the start permission input signal from the ground station turns ON. The module is permitted to pass through the intersection via the intersection control from the ground station.
9	Tab for maintenance	Unusable.
10	Tab for intersection operation setting	Allows you to set the intersection control parameters.

◈ Tab for intersection operation setting

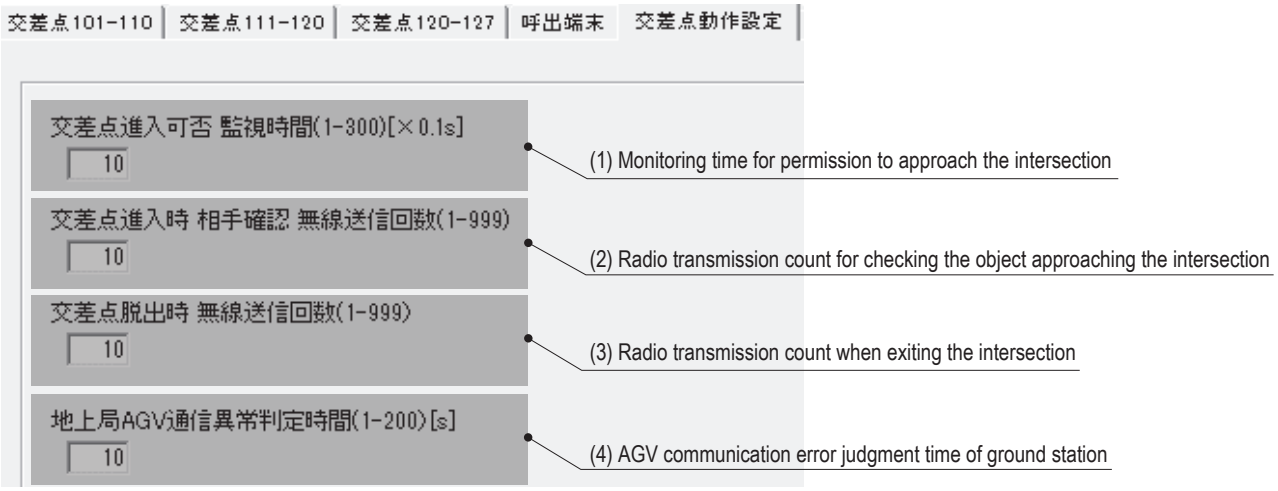

No.	Name	Contents
1	Monitoring time for permission to approach the intersection	Monitoring time during approach to or waiting at the intersection. When the intersection is instructed, the inside of the intersection is checked after the monitoring time has elapsed. When passing is confirmed during this monitoring time, the status changes to waiting. In the waiting status, if the radio transmission that indicates “passing” cannot be received within the monitoring time, the inside of the intersection is checked. If the inside of the intersection cannot be checked, the status changes to passing.
2	Radio transmission count for checking the object approaching the intersection	Sets the number of times to check the object approaching the intersection. After the signal has been transmitted the set number of times, the AGV enters the intersection. If no reply is transmitted from the ground station after the radio has been transmitted the set number of times, the ground station displays system error code 102.
3	Radio transmission count when exiting the intersection	Sets the number of times to inform the waiting wireless intersection module or the ground station that the AGV has exited the intersection.
4	AGV communication error judgment time of ground station	When the ground station cannot receive the radio transmission that shows passing beyond the error judgment time, the approach process that is waiting is started.

10-1-3. Connection and disconnection procedures

◈ Connecting the wireless intersection module

Step 1	Connect the CN3 connector of the wireless intersection module and the RS232C port of the personal computer using the wireless intersection module setting cable FCP-RCC08.
Step 2	Supply the power to the wireless intersection module.
Step 3	Run the FCU-RC01 setup software on the personal computer.
Step 4	Select a COM port in “Select COM port” of the FCU-RC01 setup software.
Step 5	Click “Open” or “Close” in “Select COM port” of the FCU-RC01 setup software.

◈ Disconnecting the wireless intersection module

Step 1	Click “Open” or “Close” in “Select COM port” of the FCU-RC01 setup software.
Step 2	Turn OFF the power supply to the wireless intersection module.
Step 3	Disconnect the wireless intersection module setting cable FCP-RCC08 from the CN3 connector of the wireless intersection module and the RS232C port of the personal computer.

10-2. ID setting

An ID of the wireless intersection module is normally set using the rotary switches RSW 1 to 3, but it can also be set using the parameter settings from the personal computer. For setting, enter an ID in the parameter settings of the FCU-RC01 setup software. To reflect the ID setting that has been performed from the personal computer, it is necessary to set all rotary switches RSW 1 to 3 to 0.

10-2-1. Setting example

(Example) To set the ID of the wireless intersection module installed on AGV1 to 9 using the settings of the personal computer.

Wireless Intersection Module	Rotary switches RSW1 to 3 (ID setting)	Rotary switch RSW4 (Frequency)
AGV1	0	F

Step 1	In the wireless intersection module parameter setting area of the FCU-RC01 setup software, set 9 in “ID”. 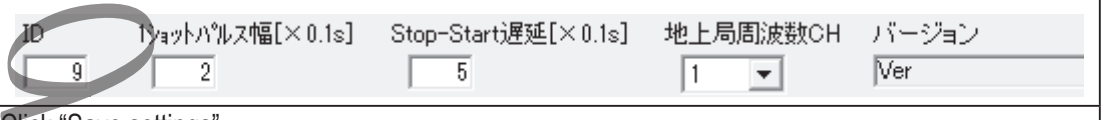
Step 2	Click “Save settings”. The settings are saved to the wireless intersection module installed on AGV1.
Step 3	Turn OFF the power to the wireless intersection module, and then turn it ON again.

10-3. One shot pulse width setting

You can set the one-shot width of the signal to be output by the start output in the address sensor mode or RFID mode, or by the start output or stop output in the external control mode.
You can also select whether the start signal is output using the level or one shot in the external control mode in accordance with the setting of the DIP switch SW1-4. In the same manner, you can select whether the stop signal is output using the level or one shot in accordance with the setting of the DIP switch SW1-5.

10-3-1. Setting example

(Example) To set the one shot output width of the wireless intersection module installed on AGV1 to 400 ms. using the settings of the personal computer.

Step 1	In the wireless intersection module parameter setting area of the FCU-RC01 setup software, set 4 in “One shot pulse width”. 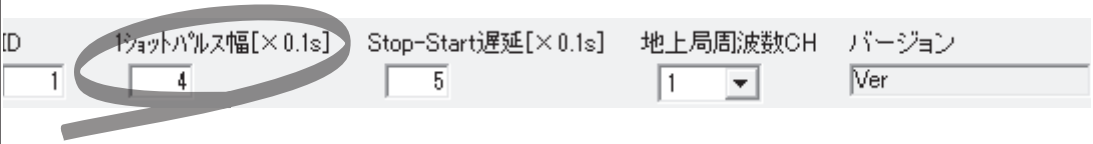
Step 2	Click “Save settings”. The settings are saved to the wireless intersection module installed on AGV1.
Step 3	Turn OFF the power to the wireless intersection module, and then turn it ON again.

10-4. Stop-Start delay setting

You can set the delay time of the timing at which the stop output from the wireless intersection module is turned OFF, and then the start output is turned ON.
The standard setting is 0.5 second. However, you can change the setting in accordance with the system to be used.

10-4-1. Setting example

(Example) To set the Stop-Start delay setting of the wireless intersection module installed on AGV1 to 1 second using the settings of the personal computer.

Step 1	In the wireless intersection module parameter setting area of the FCU-RC01 setup software, set 10 in “Stop-Start delay”. 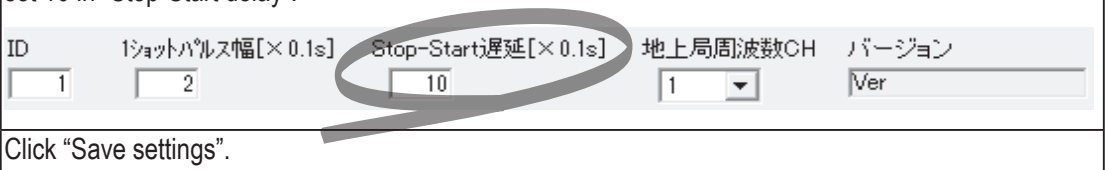
Step 2	Click “Save settings”. The settings are saved to the wireless intersection module installed on AGV1.
Step 3	Turn OFF the power to the wireless intersection module, and then turn it ON again.

10-5. Frequency CH setting

The frequency CH for intersection No. of the wireless intersection module is set using the rotary switch RSW4, but the frequency CH for each intersection No. can be set using the parameter settings from the personal computer.
For setting, enter a frequency CH in the parameter settings of the FCU-RC01 setup software.
To reflect the ID setting that has been performed from the personal computer. it is necessary to set the rotary switch RSW4 to 0.

In addition, the settable frequencies and frequency CHs are as follows.

RSW4	Frequency	Frequency CH
1	2405 MHz	1
2	2410 MHz	2
3	2415 MHz	3
4	2420 MHz	4
5	2425 MHz	5
6	2430 MHz	6
7	2435 MHz	7
8	2440 MHz	8
9	2445 MHz	9
A	2450 MHz	10
B	2455 MHz	11
C	2460 MHz	12
D	2465 MHz	13
E	2470 MHz	14
F	2475 MHz	15

10-5-1. Setting example

(Example) To set intersection No. 1 to frequency CH14, intersection No. 2 to frequency CH15, and intersection No. 3 to frequency CH18.

Wireless Intersection Module	Rotary switches RSW1 to 3 (ID setting)	Rotary switch RSW4 (Frequency)
AGV1	1	0
AGV2	2	0

Step 1	To set intersection No. 1 to frequency CH14, intersection No. 2 to frequency CH15, and intersection No. 3 to frequency CH18 in the wireless intersection module parameter setting area of the FCU-RC01 setup software.
Step 2	Click “Save settings”. The settings are saved to the wireless intersection modules installed on AGV1 and 2.
Step 3	Turn OFF the power to the wireless intersection module, and then turn it ON again.

10-6. Travel priority setting

When the intersection control is performed in the address sensor mode or RFID mode, it is always necessary to pause the AGV. However, when the AGV has the pause input, the intersection control can be performed without pausing.
When the CNG connector of the 12 or 24 V forward type Drive Unit is directly connected to the wireless intersection module box, the pause input can be used as this input is available at the connection point.
When the small Drive Unit and course 30 unit are used, the pause input cannot be used as this input is not available at the connection point.
Note that the contact type of the pause input must be normally open. The pause input cannot be used for the normally close contact type.

10-6-1. Setting example

(Example) To set intersection Nos. 1 to 4 to the travel priority.

Wireless Intersection Module	Rotary switches RSW1 to 3 (ID setting)	Rotary switch RSW4 (Frequency)
AGV1	1	F
AGV2	2	F

Step 1	In the wireless intersection module parameter setting area of the FCU-RC01 setup software, set as follows. Intersection Nos. 1 to 4, Travel priority ON.
Step 2	Click “Save settings”. The settings are saved to the wireless intersection modules installed on AGV1 and 2.
Step 3	Turn OFF the power to the wireless intersection module, and then turn it ON again.

10-6-2. Address sensor mode

To make the AGV recognize the intersection entrance, affix the address magnetic plate corresponding to the intersection address to a position where the address sensor can read it. (This description uses intersection address 1.)
After that, to make the AGV recognize the intersection exit, affix the address magnet (intersection address 0) that clears the intersection address.
Install the address sensor so that it reads the address magnetic plate vertically to the traveling direction.
First, checking is performed in accordance with the monitoring time for permission to approach the intersection and the radio transmission count for checking the object approaching the intersection. If there is an AGV that is passing through the intersection, the AGV pauses at the entrance.
When the wireless intersection module installed on the AGV that is passing through the intersection recognizes the intersection exit, the pause is turned OFF.
Note that the AGV must read the address magnetic plate at the intersection entrance at a low speed.

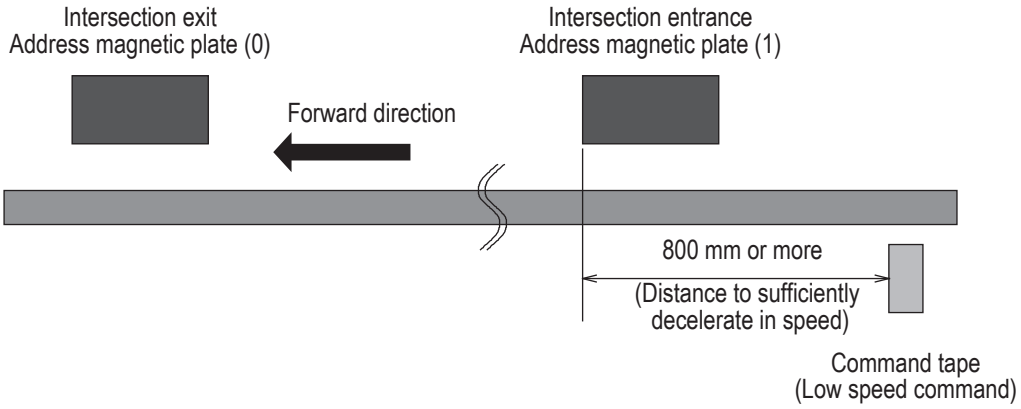

Figure. Installation of address magnetic plate for travel priority

10-6-3. Timing chart

◈ AGV (1) is passing and AGV (2) is waiting at intersection address (1).

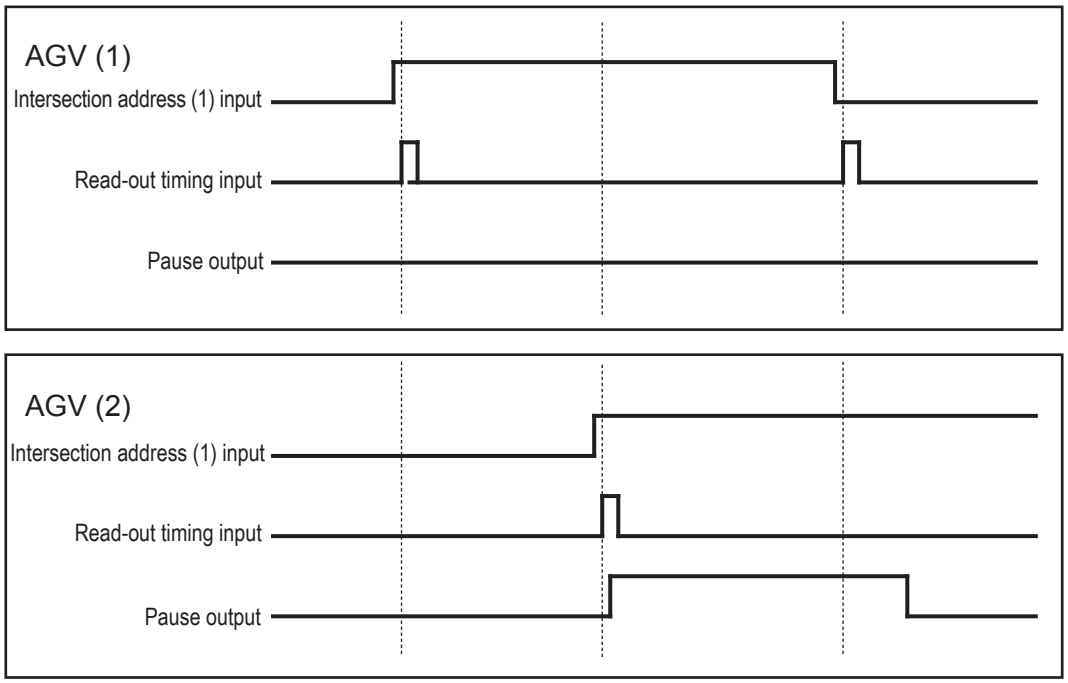

Whether the approach to the intersection is permitted or not is determined upon completion of checking specified by the monitoring time for permission to approach the intersection and the radio transmission count for checking the object approaching the intersection.
Even when the AGV travels during this period, adjust the detection timing of the address magnetic plate or ID tag from the positional relationship between the AGVs at the intersection.

The waiting wireless intersection module cannot check the communication of the wireless intersection module that is passing through the intersection. The waiting wireless intersection module enters the passing status upon completion of checking specified by the monitoring time for permission to approach the intersection and radio transmission count for checking the object approaching the intersection.

For the intersection control using the ground station, when the ground station cannot check the communication of the wireless intersection module that is passing through the intersection within the AGV communication error judgment time of the ground station, the waiting wireless intersection module is set to the passing status. The waiting wireless intersection module then enters the passing status.

10-6-4. RFID mode

To make the AGV recognize the intersection entrance, affix the ID tag corresponding to the intersection address to a position where the RFID antenna can read the ID tag. (This description uses intersection address 1.)

After that, to make the AGV recognize the intersection exit, affix the ID tag (intersection address 0) that clears the intersection address.

First, checking is performed in accordance with the monitoring time for permission to approach the intersection and the radio transmission count for checking the object approaching the intersection. If there is an AGV that is passing through the intersection, the AGV pauses at the entrance.

When the wireless intersection module installed on the AGV that is passing through the intersection recognizes the intersection exit, the pause is turned OFF.

Note that the AGV must read the ID tag at the intersection entrance at a low speed.

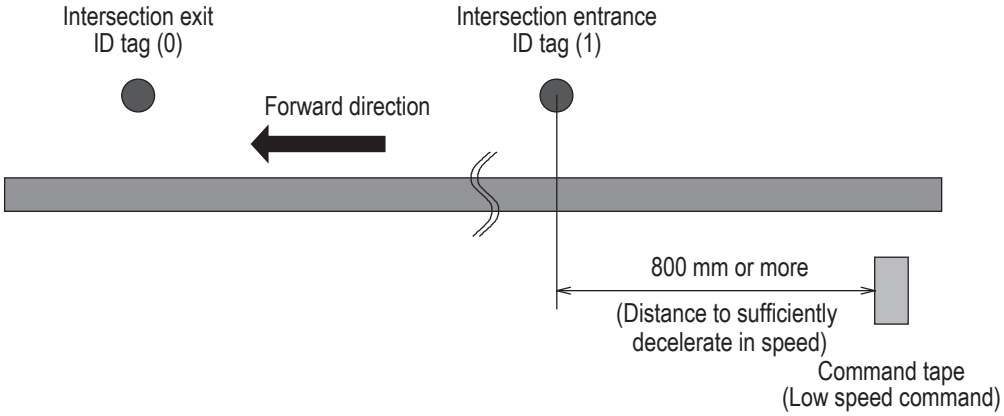

Figure. Installation of ID tag for travel priority

10-6-5. Timing chart

◈ AGV (1) is passing and AGV (2) is waiting at intersection address (1).

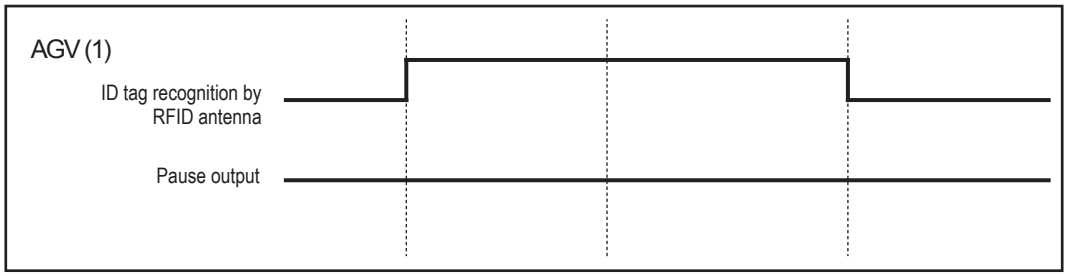

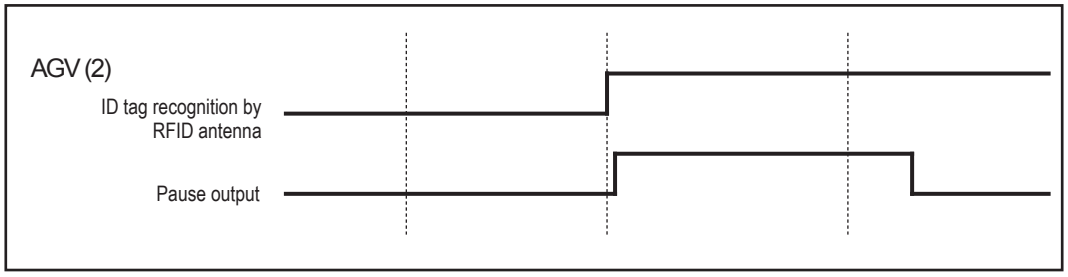

- Whether the approach to the intersection is permitted or not is determined upon completion of checking specified by the monitoring time for permission to approach the intersection and the radio transmission count for checking the object approaching the intersection. Even when the AGV travels during this period, adjust the detection timing of the address magnetic plate or ID tag from the positional relationship between the AGVs at the intersection.
- The waiting wireless intersection module cannot check the communication of the wireless intersection module that is passing through the intersection. The waiting wireless intersection module enters the passing status upon completion of checking specified by the monitoring time for permission to approach the intersection and radio transmission count for checking the object approaching the intersection.
- For the intersection control using the ground station, when the ground station cannot check the communication of the wireless intersection module that is passing through the intersection within the AGV communication error judgment time of the ground station, the waiting wireless intersection module is set to the passing status.

10-7. Ground station setting

For the case of using the wireless intersection module as a ground station, if the communication status is unstable due to a long distance of wireless communication or due to effects of obstacles caused by the layout, installing a ground station will help negate these effects allowing radio waves to reach their destinations. Note that one ground station can control up to four intersections.

10-7-1. Setting example 1

(Example) To perform the intersection control of intersection No. 1 using the ground station (ID900).

Wireless Intersection Module	Rotary switches RSW1 to 3 (ID setting)	Rotary switch RSW4 (Frequency)
AGV1	1	F
AGV2	2	F
Ground station	900	F

Step 1	In the wireless intersection module parameter setting area of the FCU-RC01 setup software, set as follows. Intersection No. 1, Ground station ON, Ground station ID 900. 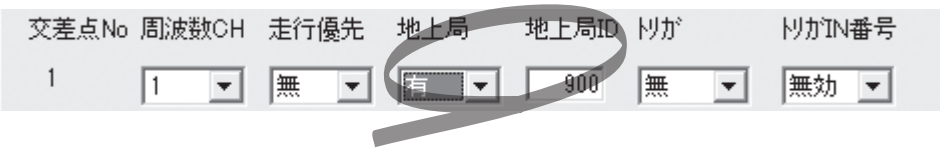 Note: Since the ID, ground station frequency CH, and frequency CH are set by the rotary switches, the settings are not needed.
Step 2	Click “Save settings”. The settings are saved to the wireless intersection modules installed on AGV1 and 2, and ground station.
Step 3	Turn OFF the power to the wireless intersection module, and then turn it ON again.

10-7-2. Setting example 2

(Example) To perform the intersection control of intersection No. 1 using the ground station (ID900) and intersection No. 2 using the ground station (ID901).

Wireless Intersection Module	Rotary switches RSW1 to 3 (ID setting)	Rotary switch RSW4 (Frequency)
AGV1	1	F
AGV2	2	F
Ground station 1	900	F
Ground station 2	901	F

Step 1	In the wireless intersection module parameter setting area of the FCU-RC01 setup software, set as follows. Intersection Nos. 1 and 2, Ground station ON, Ground station ID 900, 901. 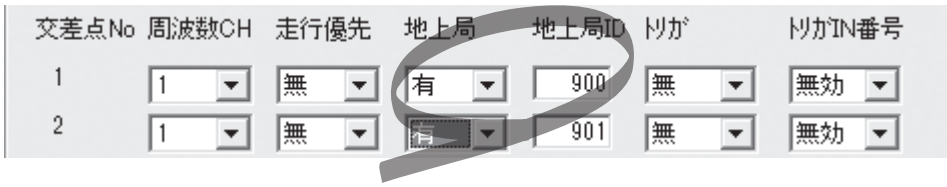 Note: Since the ID, ground station frequency CH, and frequency CH are set by the rotary switches, the settings are not needed.
Step 2	Click “Save settings”. The settings are saved to the wireless intersection modules installed on AGV1 and 2, and ground station.
Step 3	Turn OFF the power to the wireless intersection module, and then turn it ON again.

The same intersection No. is not set to ON for the ground stations with different IDs like intersection No. 1 is ON for the ground stations with ID900 and ID901. Otherwise, the communication malfunctions.

10-7-3. Setting example 3

(Example) To perform the intersection control of intersection No. 1 using the ground station (ID900). (The frequency CH is set to 14 using the personal computer setting.)

Wireless Intersection Module	Rotary switches RSW1 to 3 (ID setting)	Rotary switch RSW4 (Frequency)
AGV1	1	0
AGV2	2	0
Ground station	900	0

Step 1	In the wireless intersection module parameter setting area of the FCU-RC01 setup software, set 14 in “Ground station frequency CH”. 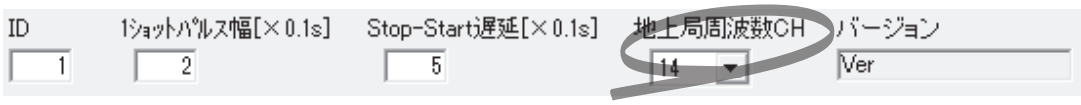 Note: Since the ID is set by the rotary switches, the setting is not needed.
Step 2	In the wireless intersection module parameter setting area of the FCU-RC01 setup software, set as follows. Frequency CH 14, Ground station ON, Ground station ID 900. 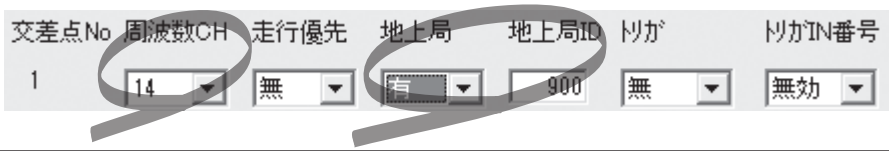
Step 3	Click “Save settings”. The settings are saved to the wireless intersection modules installed on AGV1 and 2, and ground station.
Step 4	Turn OFF the power to the wireless intersection module, and then turn it ON again.

10-7-4. Setting example 4

(Example) To perform the intersection control of intersection No. 1 using the ground station (ID900). (For the ID and frequency CH settings, set AGV1 to ID1, AGV2 to ID2, ground station ID to 900, and frequency CH to 14.)

Wireless Intersection Module	Rotary switches RSW1 to 3 (ID setting)	Rotary switch RSW4 (Frequency)
AGV1	0	0
AGV2	0	0
Ground station	0	0

◈ AGV1 setting procedures

Step 1	In the wireless intersection module parameter setting area of the FCU-RC01 setup software, set 1 in “ID” and 14 in “Ground station frequency CH”. 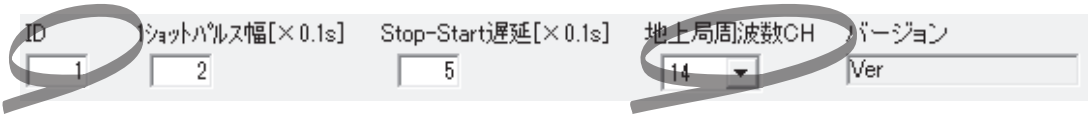
Step 2	In the wireless intersection module parameter setting area of the FCU-RC01 setup software, set as follows. Frequency CH 14, Ground station ON, Ground station ID 900 for Intersection No. 1. 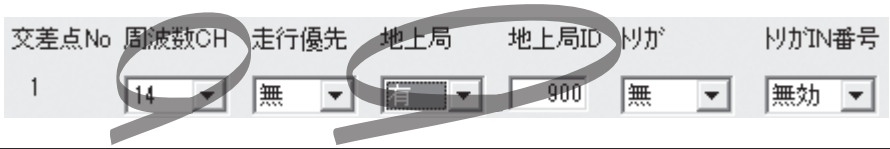
Step 3	Click “Save settings”. The settings are saved to the wireless intersection module installed on AGV1.
Step 4	Turn OFF the power to the wireless intersection module, and then turn it ON again.

◈ AGV2 setting procedures

Step 1	In the wireless intersection module parameter setting area of the FCU-RC01 setup software, set 2 in “ID” and 14 in “Ground station frequency CH”. 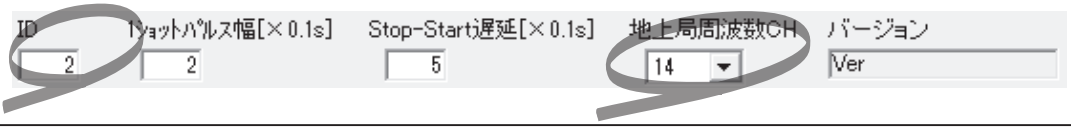
Step 2	In the wireless intersection module parameter setting area of the FCU-RC01 setup software, set as follows. Frequency CH 14, Ground station ON, Ground station ID 900 for Intersection No. 1. 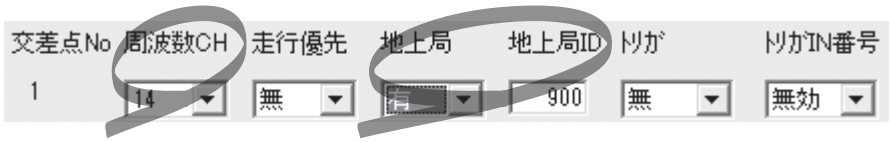
Step 3	Click “Save settings”. The settings are saved to the wireless intersection module installed on AGV1.
Step 4	Turn OFF the power to the wireless intersection module, and then turn it ON again.

◈ Ground station setting procedures

Step 1	In the wireless intersection module parameter setting area of the FCU-RC01 setup software, set 900 in “ID” and 14 in “Ground station frequency CH”. 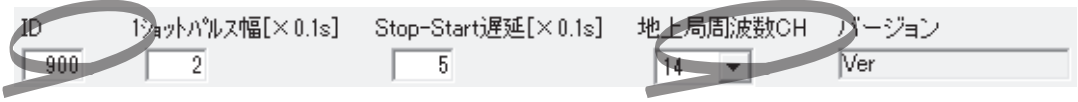
Step 2	In the wireless intersection module parameter setting area of the FCU-RC01 setup software, Intersection No. 1, set 14 in “Frequency CH”, ON in “Ground station”, and 900 in “Ground station ID”. 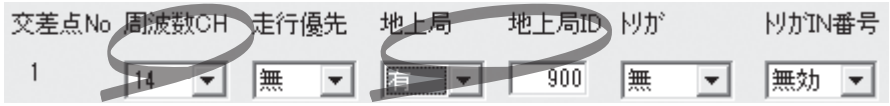
Step 3	Click “Save settings”. The settings are saved to the wireless intersection module installed on AGV1.
Step 4	Turn OFF the power to the wireless intersection module, and then turn it ON again.

10-7-5. Caution

When the wireless intersection module is used in the ground station mode, the wireless intersection module installed on each AGV communicates with the wireless intersection module set in the ground station mode to perform the intersection control.
If the wireless intersection module set in the ground station mode cannot communicate with the wireless intersection module installed on the AGV, the wireless intersection module installed on the AGV displays system error code 102 at the intersection entrance.
Check that the power to the wireless intersection module set in the ground station mode is ON, that the antenna is connected, that there are no obstacles around the antenna, and then remove the cause of the communication failure. After turning OFF the power to each wireless intersection module, and then turning it ON again, make the wireless intersection module recognize the intersection entrance again to recover from the communication failure status.

10-8. Trigger setting

When the wireless intersection module is used in the ground station mode, IN1 to IN7 become the start permission 1 to 7 inputs. These inputs permit the approach to an intersection when the intersection control is performed using the ground station.

To use these signals, set ON in “Trigger” and set a desired input IN1 to 7 in “Trigger IN No.” using the parameter settings of the FCU-RC01 setup software.

Multiple trigger IN Nos. IN 1 to 7 can be specified for each ground station ID.

However, duplicate settings like IN1 is set for intersection Nos. 1 and 2 cannot be performed. At this time, it is necessary to avoid duplicate settings like IN1 is set for intersection No. 1 and IN2 for intersection No. 2.

10-8-1. Setting example

(Example) To perform the intersection control of intersection No. 1 using the ground station (ID900) and set IN1 in “Trigger IN No.” of intersection No. 1.

Wireless Intersection Module	Rotary switches RSW1 to 3 (ID setting)	Rotary switch RSW4 (Frequency)
AGV1	1	F
Ground station	900	F

Step 1	In the wireless intersection module parameter setting area of the FCU-RC01 setup software, set as follows. Intersection No. 1, Ground station ON, Trigger IN, Trigger No. IN1. 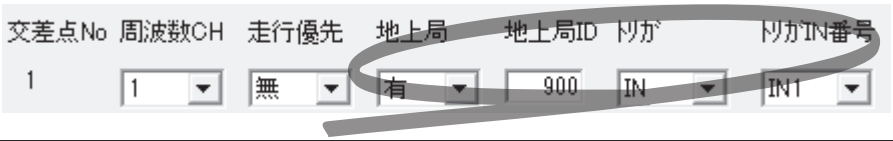
Step 2	Click “Save settings”. The settings are saved to AGV1 and ground station.
Step 3	Turn OFF the power to the wireless intersection module, and then turn it ON again.

10-8-2. Timing chart

◈ After AGV (1) (in the address sensor mode) has arrived at intersection No. 1, it approaches to the intersection by the start permission 1 input.
AGV (1) arrives at intersection No. 1 and waits until the start permission 1 input of ground station (1) turns ON.
For the timing to turn OFF the start permission 1 input, it is checked that the passing output turns ON, and then the start permission 1 input is turned OFF.

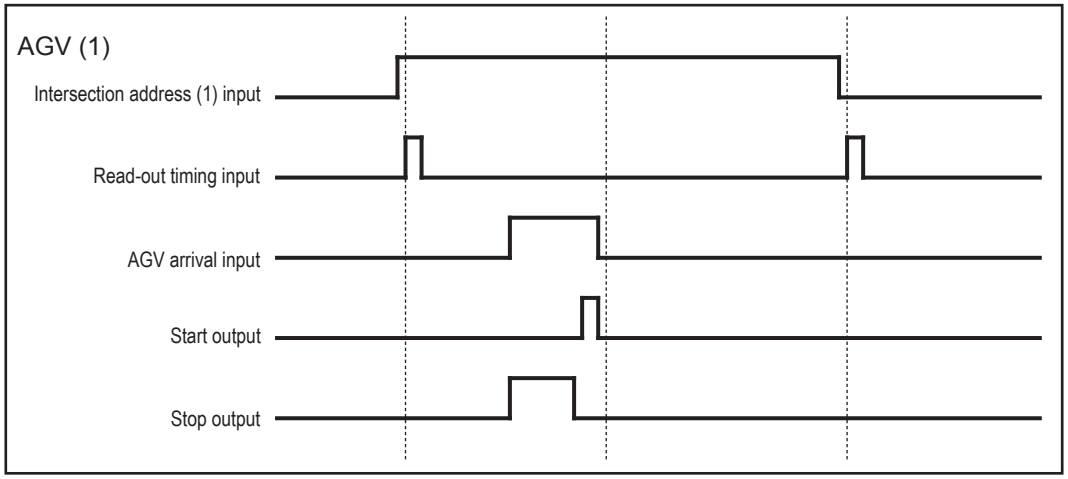

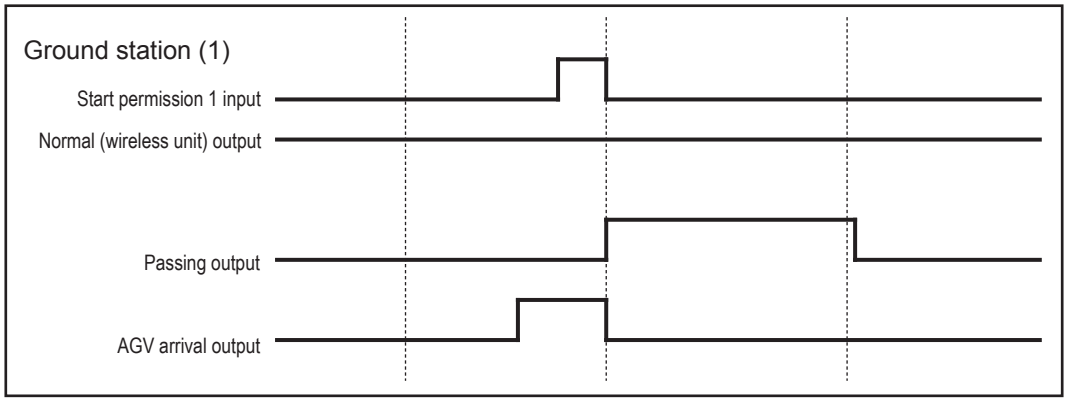

When the start is permitted by the trigger at two or more intersections, the intersection judgment cannot be performed since only one AGV arrival signal is sent from the ground station. Increase the number of ground stations in accordance with the application.

10-9. Intersection operation setting

This setting becomes parameters to check the intersection status at approach to intersection.

Basically, use the standard values.

10-9-1. Setting example

(Example) Regarding the wireless intersection module installed on the AGV, to set 2 seconds for the monitoring time for permission to approach the intersection using the settings of the personal computer.

Step 1	Set 20 in “monitoring time for permission to approach the intersection” of the FCU-RC01 setup software. 交差点進入可否 監視時間(1-300)[×0.1s] 20
Step 2	Click “Save settings”. 設定書込 設定読出 初期化 バージョン情報 リセット The settings are saved to the wireless intersection module.
Step 3	Turn OFF the power to the wireless intersection module, and then turn it ON again.

(Example) Regarding the wireless intersection module installed on the AGV, to set 20 for the radio transmission count for checking the object approaching the intersection.

Step 1	Set 20 in “radio transmission count for checking the object approaching the intersection” of the FCU-RC01 setup software. 交差点進入時 相手確認 無線送信回数(1-999) 20
Step 2	Click “Save settings”. 設定書込 設定読出 初期化 バージョン情報 リセット The settings are saved to the wireless intersection module.
Step 3	Turn OFF the power to the wireless intersection module, and then turn it ON again.

(Example) Regarding the wireless intersection module installed on the AGV, to set 20 for the radio transmission count when exiting the intersection using the settings of the personal computer.

Step 1	Set 20 in “Radio transmission count when exiting the intersection” of the FCU-RC01 setup software. 交差点脱出時 無線送信回数(1-999) 20
Step 2	Click “Save settings”. 設定書込 設定読出 初期化 バージョン情報 リセット The settings are saved to the wireless intersection module.
Step 3	Turn OFF the power to the wireless intersection module, and then turn it ON again.

(Example) Regarding the wireless intersection module installed on the AGV, to set 5 seconds for the ground station AGV error judgment time using the settings of the personal computer.

Step 1	Set 5 in “Ground station AGV error judgment time” of the FCU-RC01 setup software. 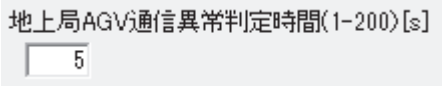
Step 2	Click “Save settings”. The settings are saved to the wireless intersection module.
Step 3	Turn OFF the power to the wireless intersection module, and then turn it ON again.

10-10. Initialization

The parameter settings of the wireless intersection module are initialized.

10-10-1. Procedures

Step 1	Click “Initialize” on the FCU-RC01 setup software.
Step 2	Turn OFF the power to the wireless intersection module, and then turn it ON again.

10-11. Load or Save settings

10-11-1. Settings saving procedures

Step 1	Click “File” on the FCU-RC01 setup software. 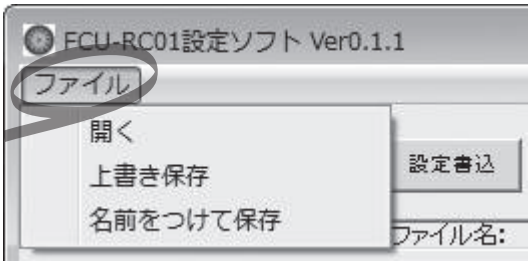
Step 2	Click “Save as”. 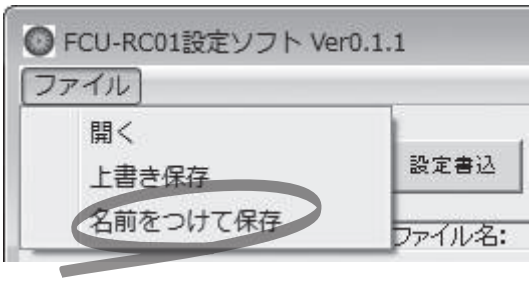
Step 3	Enter a file name, and then click “Save”. 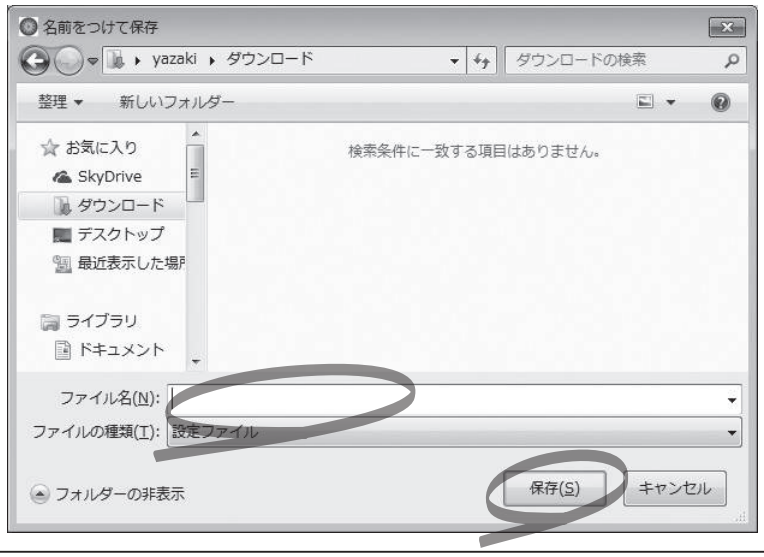

10-11-2. Settings loading procedures

Step 1	Click “File” on the FCU-RC01 setup software. 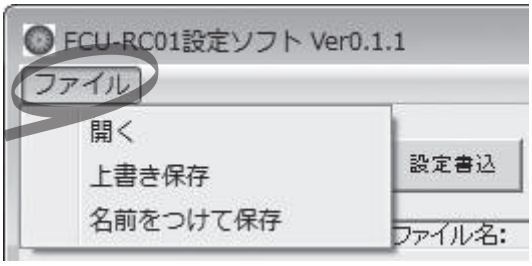
Step 2	Click “Open”. 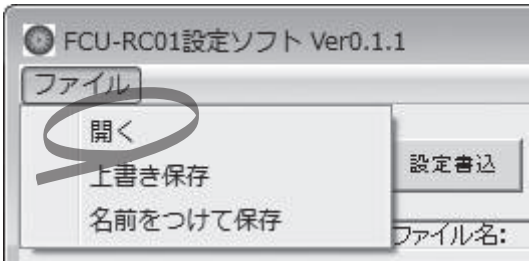
Step 3	Specify a file name, and then click “Open”.

11. External control mode

The operation mode of the wireless intersection module includes an external control mode that assumes connection of an external device such as a PLC.

11-1. Settings

It is necessary to perform the following settings on the wireless intersection module.

Usable intersection address		1 to 127
Switch settings of wireless intersection module	SW1-1	ON
	SW1-2	ON
	SW1-3	OFF
	SW1-4	ON or OFF
	SW1-5	ON or OFF
	SW1-6	OFF
	SW1-7	OFF
	SW1-8	OFF
	RSW1 to 3	Create a unique setting for each wireless intersection module that is not duplicated.
	RSW4	Select a usable frequency band.

You can also select whether the start signal is output at a level or in one shot in the external control mode using DIP switch SW1-4.
In the same manner, you can select whether the stop signal is output at a level or in one shot using DIP switch SW1-5.
Select either one in accordance with the programming on the external device.

The width of the one shot output can be set using the FCU-RC01 setup software.

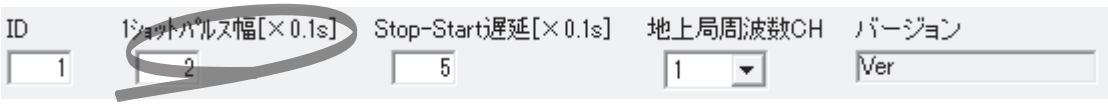

11-1-1. Wiring

➧ 11-1-1-1. Power supply

To connect the power supply, connect the XHP-2 connector to the CN1 connector of the wireless intersection module.

CN1 power connector

Connector	S2B-XH-A connector for printed circuit board (JST)
Fitting connector	XHP-2 connector for printed circuit board (JST)

Pin number	Contents
1	+24 V
2	GND

∗ Be sure to supply the power to the wireless intersection module through a protection circuit such as a fuse.

➧ 11-1-1-2. Input/output

To connect the inputs and outputs, connect the MIL 26-core female connector to the CN2 connector of the wireless intersection module.

CN2 input/output connector

Connector	MIL connector 26-core, male
Fitting connector	MIL connector 26-core, female

Pin number	Contents	Signal
1	OUT1	Start
2	OUT2	Stop
3	OUT3	-
4	OUT4	Normal
5	OUT5	Passing
6	OUT6	-
7	IN1	Intersection address (1)
8	IN2	Intersection address (2)
9	IN3	Intersection address (4)
10	IN4	Intersection address (8)
11	IN5	Intersection address (16)
12	IN6	Intersection address (32)
13	IN7	Intersection address (64)
14	IN8	AGV error
15	IN9	Intersection inquiry
16	IN10	AGV arrival
17	IN11	Intersection top priority
18	IN12	Battery voltage drop
19	IN13	Reset
20	+24 V	
21	+24 V	
22	GND	
23	GND	
24	TxD	
25	RxD	
26	SGND	

∗ +24 V and GND of pin Nos. 20 to 23 are not designed for supplying power.
Do not use these pins for supplying power to other devices.

11-1-2. Wiring example

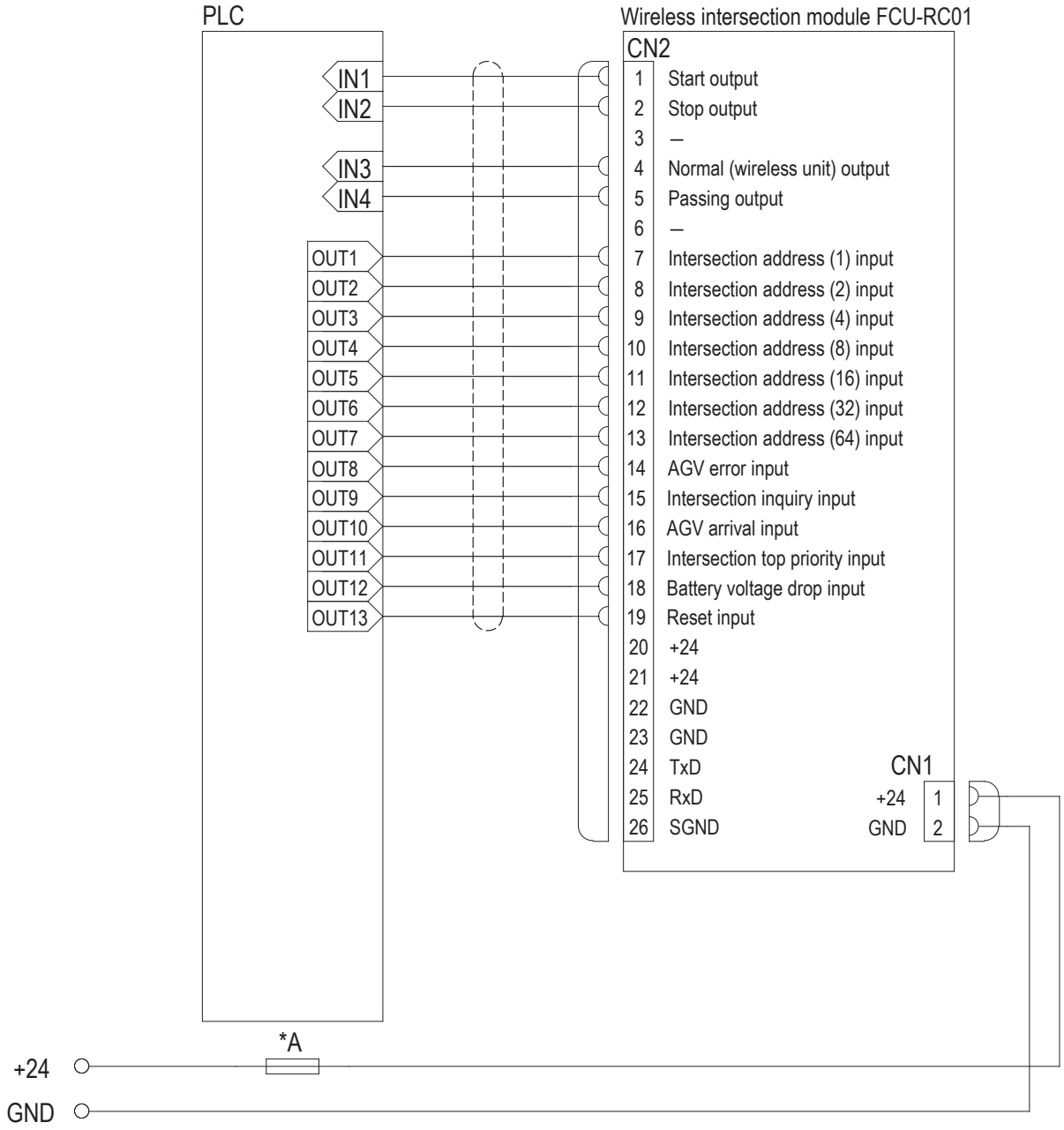

11-1-3. Flow of control

➧ 11-1-3-1. AGV (1) passes through the intersection and AGV (2) waits.

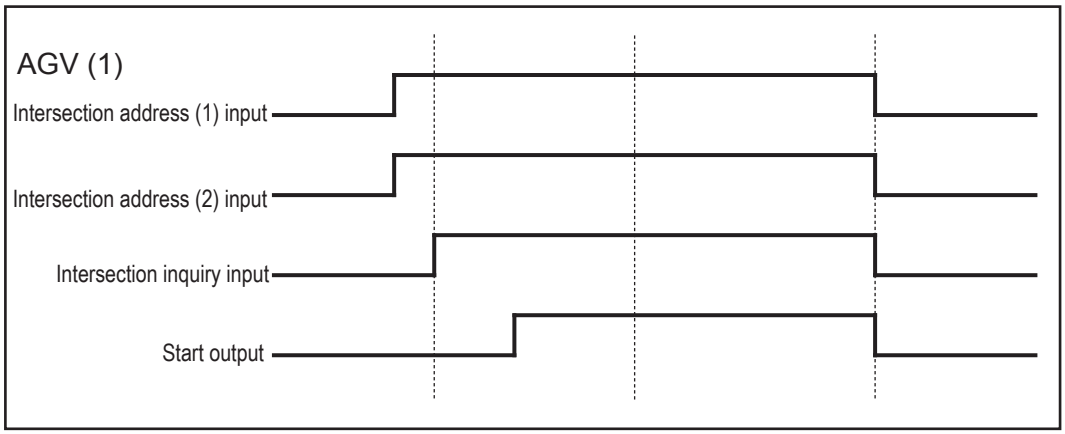

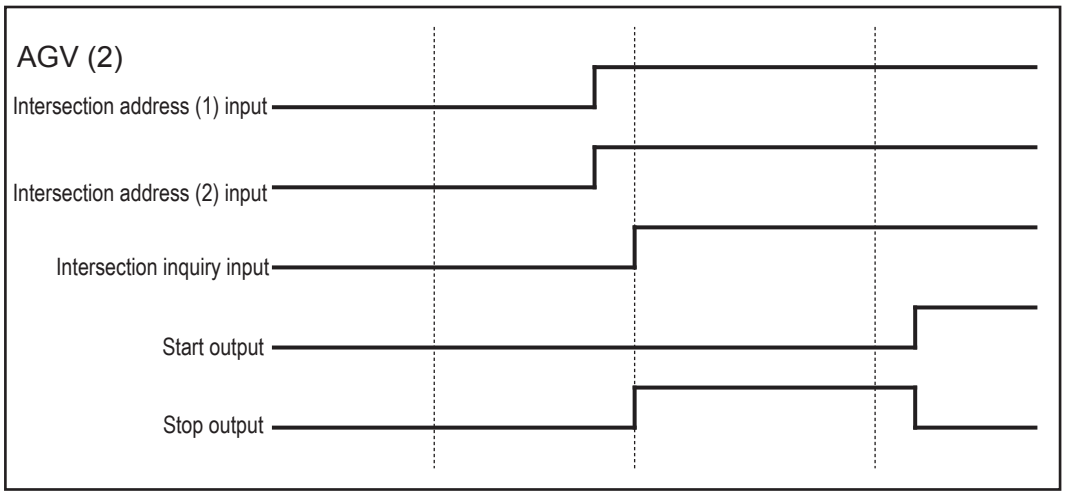

➧ 11-1-3-2. AGV (3) waits while AGV (1) is passing and AGV (2) is waiting.

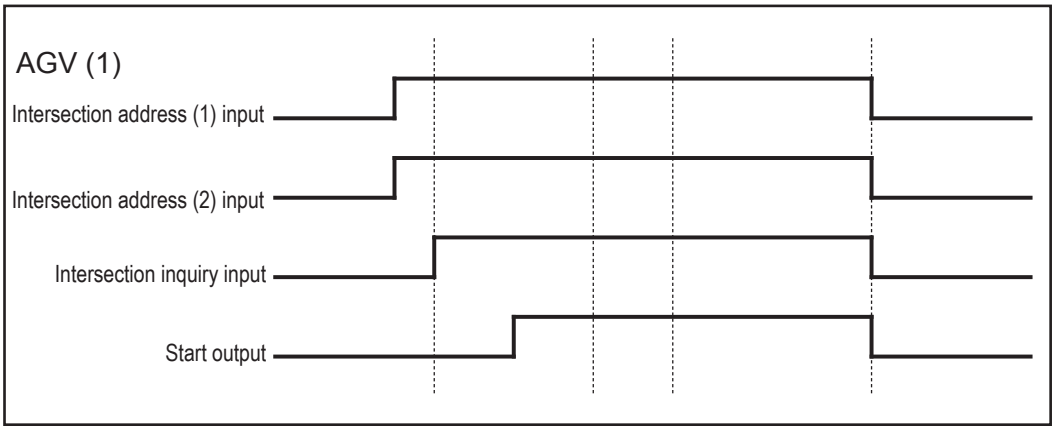

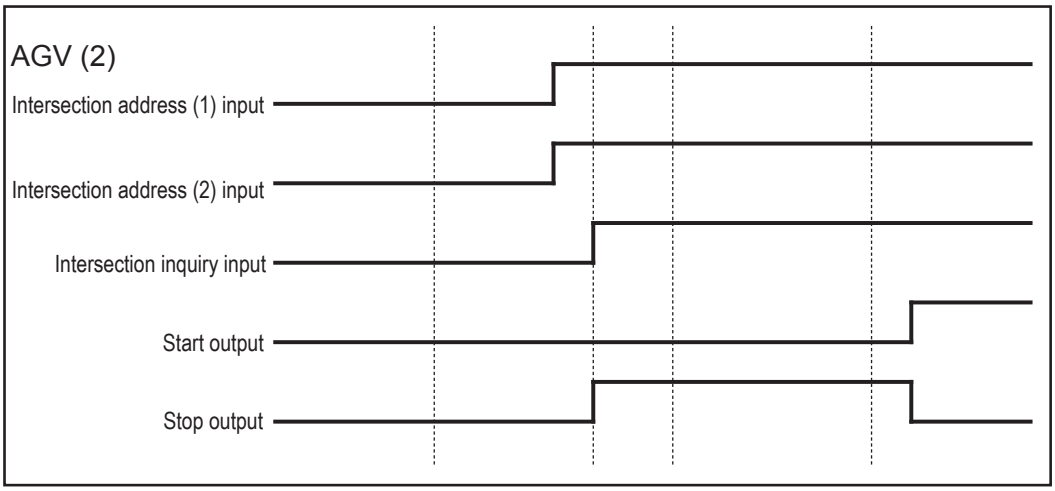

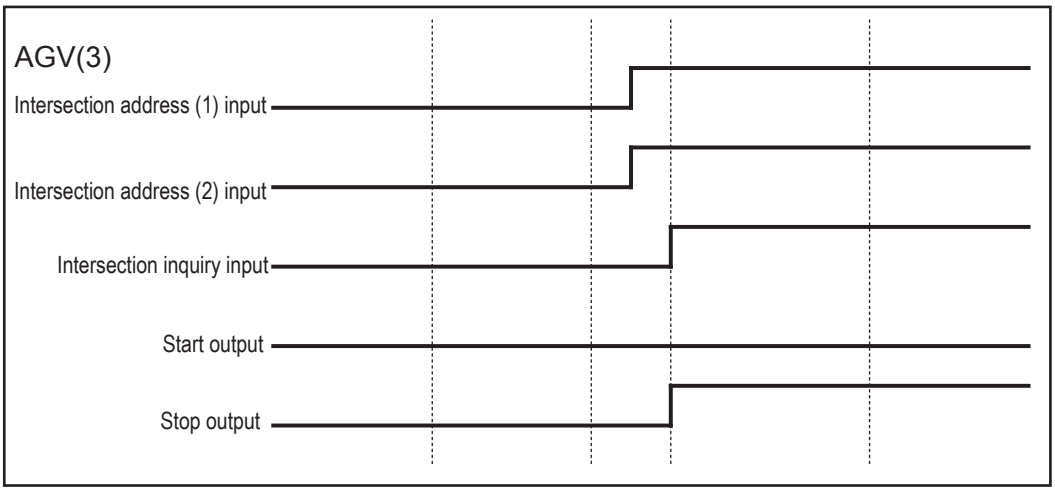

➧ 11-1-3-3. AGV (2) waits with the intersection top priority input turned ON while AGV (1) is passing and AGV (3) is waiting.

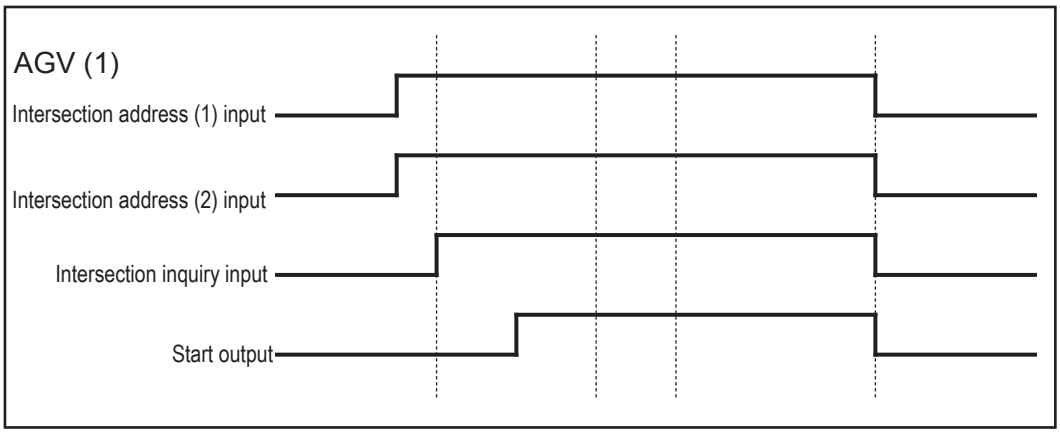

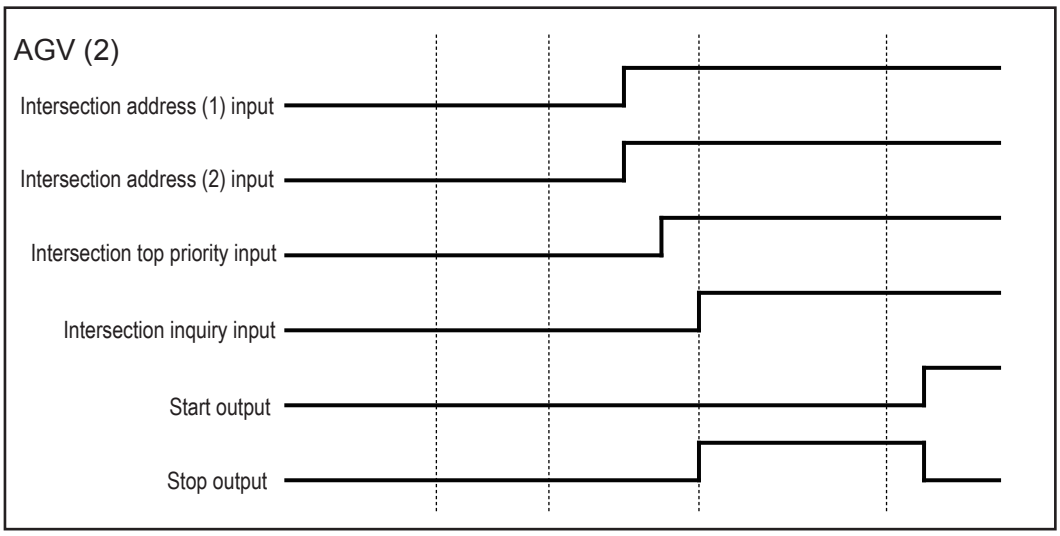

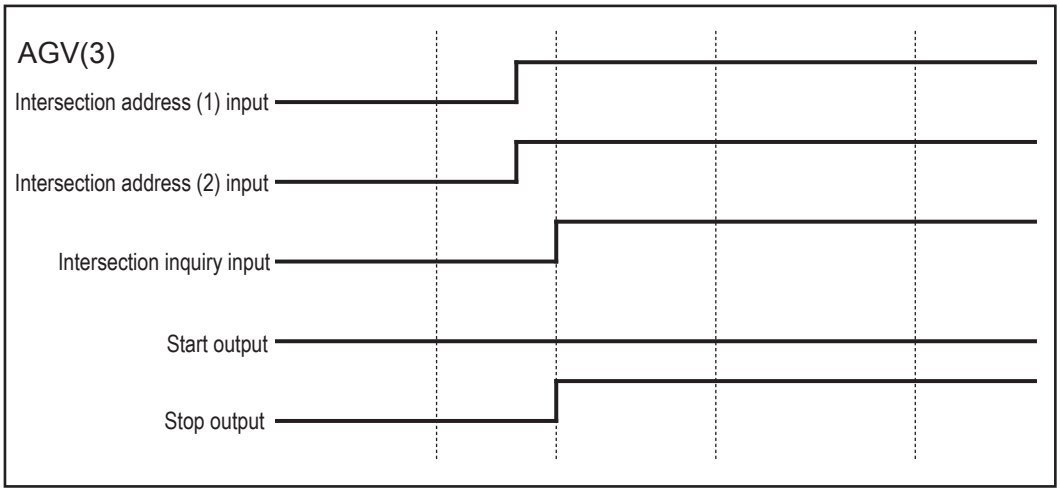

➧ 11-1-3-4. AGV (1) passes through the intersection, AGV (2) waits, and SW1-4 of each wireless intersection module is turned ON.

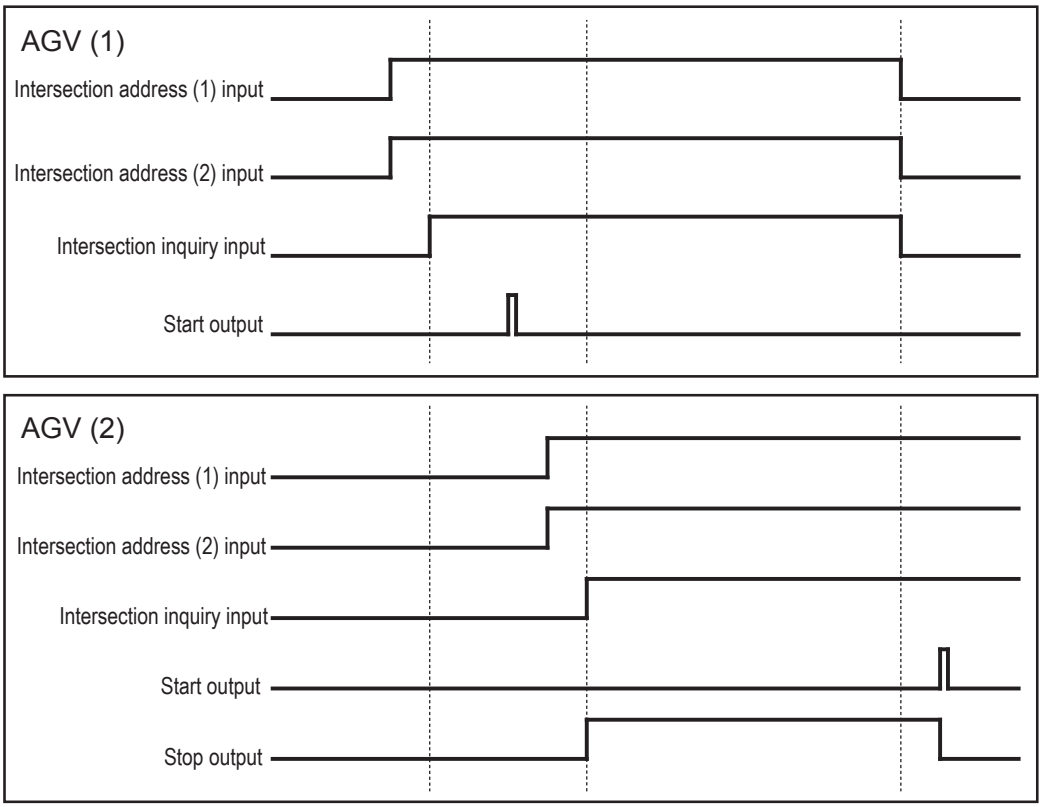

➧ 11-1-3-5. AGV (1) passes through the intersection, AGV (2) waits, and SW1-5 of each wireless intersection module is turned ON.

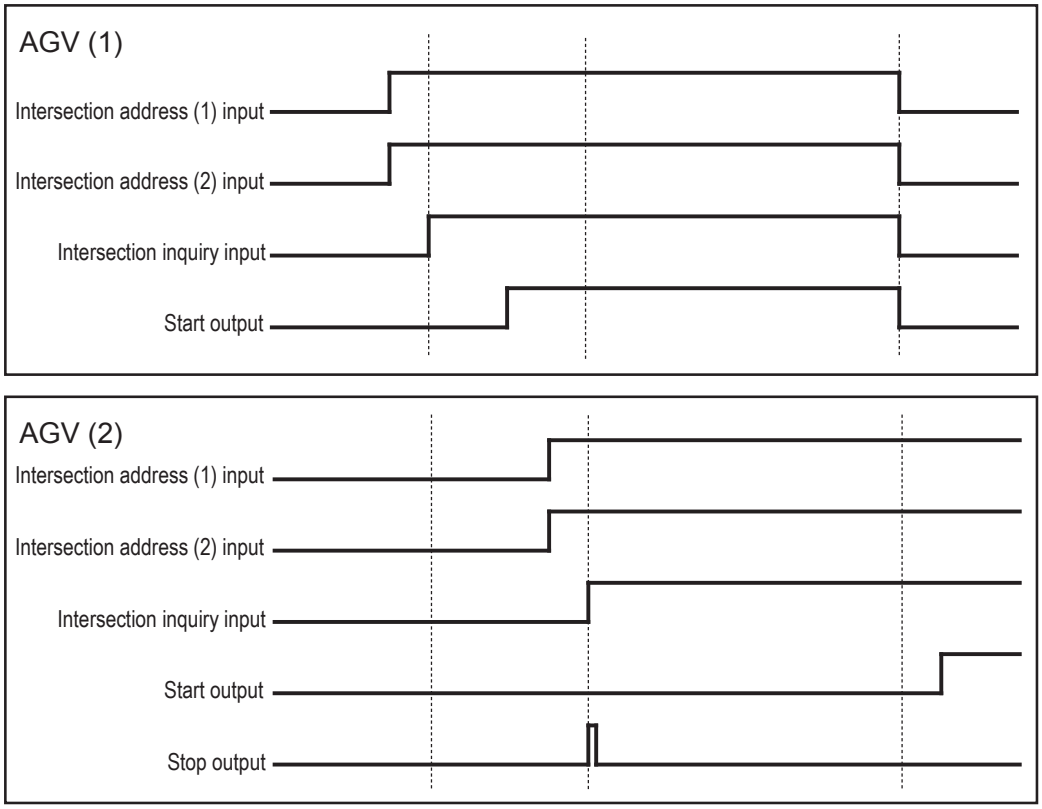

12. Caution

- When the power is turned OFF, and then turned ON again, the intersection information of the wireless intersection module is initialized.
- The waiting wireless intersection module cannot check the communication of the wireless intersection module that is passing through the intersection. The waiting wireless intersection module enters the passing status upon completion of checking specified by the monitoring time for permission to approach the intersection and radio transmission count for checking the object approaching the intersection.
- The intersection address is not retained when the power is turned OFF before the AGV is stopped by the command or count after the intersection address has been recognized by the address sensor or RFID antenna. It is necessary to travel the AGV again before the intersection address is recognized.
- Regardless of AGV traveling or stopping, when the intersection address is recognized by the address sensor or RFID antenna, the wireless intersection module recognizes that the intersection has been detected. Therefore, turn OFF the power when moving the AGV manually.

13. Contents of warranty

13-1. Warranty period

The warranty period of this product is one year after delivery to the specified location.
Note that consumables and auxiliary materials such as batteries or lamps are not covered by the warranty.
For repairs outside the warranty period, when repairing the product can maintain normally usable functions, the product is repaired on a chargeable basis as required. (We may not be able to grant the request due to discontinuance of the repair part manufacture after the warranty period.)

13-2. Warranty coverage

If any defect due to our faulty design or poor workmanship is found during the warranty period, we shall repair the defective parts free of charge.
However, the coverage of this warranty does not include the following terms.

1. Defects arising from improper handing such as dropping during transportation or relocation after the delivery.
2. Defects arising from connection with an option other that those specified by our company.
3. Defects arising from improper repair, adjustment, or modification.
4. Defects arising from operation exceeding the specification range.
5. Defects arising from fire, act of God, or natural disasters.

Note that this warranty covers only the single delivery product and does not cover incidental or consequential damages resulting from operation or malfunction of the delivered product.
The contents shown above are based on the premise that the product is operated in Japan.

14. Others

14-1. Precautions

- The Drive Unit is a registered trademark of Yazaki Kako Corporation.
- When installing a Drive Unit AGV, take safety measures in accordance with your required safety policy or standards.
- It is prohibited to modify or redistribute this manual.
- The product specifications and other description contents are subject to change without prior notice.

14-2. Contacts

Yazaki Kako Corporation

24-1, Oshika 2-chome, Suruga-ku
Shizuoka-City, Shizuoka-Pref., 422-8519 Japan

URL: http://www.yazaki.co.jp/

U.S.A	CREFORM Corporation	TEL: +1-864-989-1700
GERMANY	CREFORM Technik GmbH	TEL: +49(0)561-475-967-0
THAILAND	CREFORM yazaki (THAILAND) CO., LTD.	TEL: +66(0)2516-4812

FEDERAL COMMUNICATIONS COMMISSION INTERFERENCE STATEMENT

This equipment has been tested and found to comply with the limits for a Class B digital device, pursuant to part 15 of the FCC Rules. These limits are designed to provide reasonable protection against harmful interference in a residential installation. This equipment generates, uses and can radiate radio frequency energy and, if not installed and used in accordance with the instructions, may cause harmful interference to radio communications. However, there is no guarantee that interference will not occur in a particular installation. If this equipment does cause harmful interference to radio or television reception, which can be determined by turning the equipment off and on, the user is encouraged to try to correct the interference by one or more of the following measures:

-Reorient or relocate the receiving antenna.

-Increase the separation between the equipment and receiver.

-Connect the equipment into an outlet on a circuit different from that to which the receiver is connected.

-Consult the dealer or an experienced radio/ TV technician for help.

CAUTION:
Any changes or modifications not expressly approved by the grantee of this device could void the user's authority to operate the equipment.

This device complies with Part 15 of the FCC Rules. Operation is subject to the following two conditions:

(1) this device may not cause harmful interference, and

(2) this device must accept any interference received, including interference that may cause undesired operation.

RF exposure warning

This equipment must be installed and operated in accordance with provided instructions and the antenna(s) used for this transmitter must be installed to provide a separation distance of at least 20 cm from all persons and must not be co-located or operating in conjunction with any other antenna or transmitter. End-users and installers must be provide with antenna installation instructions and transmitter operating conditions for satisfying RF exposure compliance.

This radio transmitter FCCID: 2ANXXFCU-RC01 has been approved by FCC to operate with the antenna types listed below with the maximum permissible gain and required antenna impedance for each antenna type indicated. Antenna types not included in this list, having a gain greater than the maximum gain indicated for that type, are strictly prohibited for use with this device.

中文說明

經型式認證合格之低功率射頻電機，非經許可，公司、商號或使用者均不得擅自變更頻率、加大功率或變更原設計之特性及功能。

低功率射頻電機之使用不得影響飛航安全及干擾合法通信；經發現有干擾現象時，應立即停用，並改善至無干擾時方得繼續使用。前項合法通信，指依電信法規定作業之無線電通信。低功率射頻電機須忍受合法通信或工業、科學及醫療用電波輻射性電機設備之干擾。

17121805
DL-139-03