www.nemko.com
Via del Carroccio, 4 – 20853 Biassono (MB) – Italy

Report Reference ID:	350922-3TRFWL

Test specification:	Title 47-Telecommunication Chapter I - Federal Communications Commission Subchapter A - General Part 15 - Radio Frequency Devices Subpart C - Intentional Radiators

Applicant:	**EGICON srl**, Via Posta Vecchia n.36 - 41037 Mirandola (Modena) - Italia
Apparatus:	RFID Device
FCC ID:	2ANYI-ZDM1604D00
Model:	ZDM1604-D-00; ZDM1604-F-00

Testing laboratory:	Nemko Spa Via del Carroccio, 4 – 20853 Biassono (MB) – Italy Telephone: +039 039 2201201 Facsimile: +39 039 220 1221

	Name and title	**Date**
Tested by:	D.Guarnone, Wireless/EMC Specialist	2018-05-23
Reviewed by:	P. Barbieri, Wireless/EMC Specialist	2018-05-23

Nemko Spa authorizes the applicant to reproduce this report provided it is reproduced in its entirety and for use by the company's employees only. Any use which a third party makes of this report, or any reliance on or decisions to be made based on it, are the responsibility of such third parties.

Nemko Spa accepts no responsibility for damages, if any, suffered by any third party as a result of decisions made or actions based on this report.

This report shall not be reproduced except in full without the written approval of the testing laboratory.

This Test Report, when bearing the Nemko name and logo is only valid when issued by a Nemko laboratory.

Table of contents

Section 1: Report summary **3**
Section 2: Equipment under test **4**
2.1 Identification of equipment under test (EUT) 4
2.2 Accessories and support equipment 4
2.3 EUT description 4
2.4 Technical specifications of the EUT 4
2.5 EUT setup diagram 5
2.6 Operation of the EUT during testing 5
2.7 Modifications incorporated in the EUT 5
Section 3: Test conditions **6**
3.1 Deviations from laboratory tests procedures 6
3.2 Test conditions, power source and ambient temperatures 6
3.3 Measurement uncertainty 6
3.4 Test equipment 7
Section 4: Result summary **8**
4.1 FCC Part 15 Subpart C : Test results 8
Appendix A: Test results **9**
Appendix B: Block diagrams of test set-ups **22**

Section 1: Report summary

This report contains an assessment of apparatus against specifications based upon tests carried out on samples submitted at Nemko S.p.A.	
Test specification: FCC Part 15 Subpart C - Intentional Radiators -Operation within the band 125 kHz ANSI C63.10-2013 -American National Standard of Procedures for Compliance Testing of Unlicensed Wireless Devices	
Compliance status:	Complies
Exclusions:	None
Non-compliances:	None
Report release history:	Original release
Test location:	Nemko S.p.A.Via del Carroccio, 4 – 20853 Biassono (MB) – Italy
Registration number:	682159
The date of initial receipt of samples and the date of issue of the report. This test report has been completed in accordance with the requirements of ISO/IEC 17025. Nemko S.p.A. authorizes the applicant to reproduce this report provided it is reproduced in its entirety and for use by the company's employees only. Any use which a third party makes of this report, or any reliance on or decisions to be made based on it, are the responsibility of such third parties. Nemko S.p.A. accepts no responsibility for damages, if any, suffered by any third party as a result of decisions made or actions based on this report.	

Section 2: Equipment under test

2.1 Identification of equipment under test (EUT)

The following information identifies the EUT under test:

Type of equipment:	RFID device
Product marketing name:	ZDM1604
Model :	ZDM1604-D-00
Model variant	ZDM1604-F-00
Serial number:	000018
Nemko sample number:	1/3
FCC ID:	2ANYI-ZDM1604D00
Date of receipt:	2018-05-18

2.2 Accessories and support equipment

The following information identifies accessories used to exercise the EUT during testing:

The EUT has been tested supplied by dc power supply

2.3 EUT description

The EUT is the RFID immobilizer mounted on Ducati motorcycle's dashboard
Models are:
ZDM1604-D-00
ZDM1604-F-00 (variant)
They differ only for aesthetical (different silk-screening)

2.4 Technical specifications of the EUT

Operating frequency:	123-134 kHz; nominal 134.45 kHz
Modulation type:	FSK
Occupied bandwidth:	2.96 kHz
Emission designator:	2K96A1D
Antenna data:	Loop antenna
Power source	12 VDC

Section 2: Equipment under test, continued

2.5 EUT setup diagram

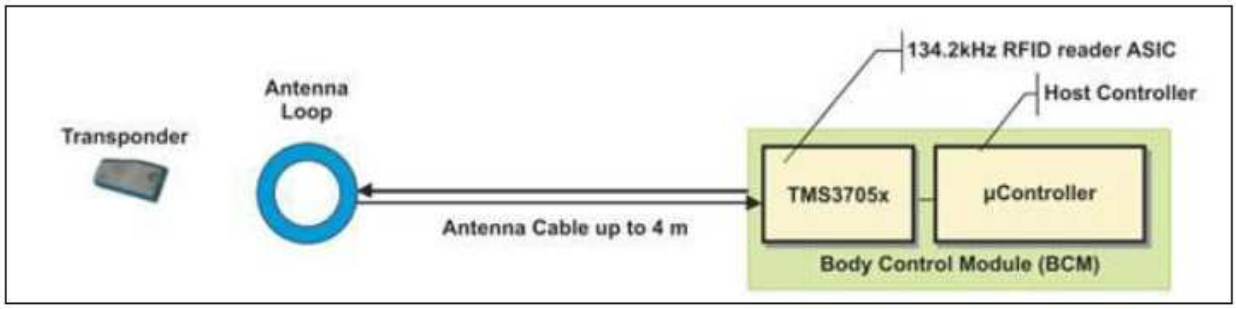

2.6 Operation of the EUT during testing

Continuous transmission mode

2.7 Modifications incorporated in the EUT

None

Section 3: Test conditions

3.1 Deviations from laboratory tests procedures

No deviations were made from laboratory test procedures.

3.2 Test conditions, power source and ambient temperatures

Normal temperature, humidity and air pressure test conditions	Temperature: 15–30 °C Relative humidity: 20–75 % Air pressure: 860–1060 hPa When it is impracticable to carry out tests under these conditions, a note to this effect stating the ambient temperature and relative humidity during the tests shall be recorded and stated.
Power supply range:	The normal test voltage for equipment to be connected to the mains shall be the nominal mains voltage. For the purpose of the present document, the nominal voltage shall be the declared voltage, or any of the declared voltages ±5 %, for which the equipment was designed.

3.3 Measurement uncertainty

The data and results referenced in this document are true and accurate. The reader is cautioned that there may be errors within the calibration limits of the equipment and facilities. The measurement uncertainty was calculated for all measurements listed in this test report according to CISPR 16-4-2 “Specification for radio disturbance and immunity measuring apparatus and methods – Part 4-2: Uncertainties, statistics and limit modelling – Uncertainty in EMC measurements“ and is documented in the Nemko Spa Technical Procedure WML1002. Furthermore, component and process variability of devices similar to that tested may result in additional deviation. The manufacturer has the sole responsibility of continued compliance of the device

Section 3: Test conditions, continued

3.4 Test equipment

Equipment	Manufacturer	Model	Serial N°	Due date
Loop antenna	R&S	HFH2-Z2	831247/011	10/2020
Trilog Broad Band Antenna 25 MHz÷2 GHz	Schwarzbeck	VULB 9162	9162-025	07/2018
Bilog antenna 1 ÷18 GHz	Schwarzbeck	STLP 9148	9148-123	06/2018
Broadband preamplifier 1 ÷18 GHz	Schwarzbeck	BBV 9718	9718-137	12/2018
EMI receiver 2Hz ÷ 44 GHz	R&S	ESW44	101620	05/2019
Semi-anechoic chamber	Nemko	10m semi-anechoic chamber	530	10/2018
Shielded room	Siemens	10m control room	1947	NCR
Note: N/A = Not Applicable, NCR = No Cal Required, COU = CAL On Use				

Section 4: Result summary

4.1 FCC Part 15 Subpart C: Test results

The column headed 'Required' indicates whether the associated clauses were invoked for the apparatus under test. The following abbreviations are used:

N	No : not applicable / not relevant.
Y	Yes : Mandatory i.e. the apparatus shall conform to these tests.
N/T	Not Tested, mandatory but not assessed. (See report summary)

Part	Test description	Required	Result
General requirements for FCC Part 15			
§15.31(e)	Variation of power source	Y	P
§15.203	Antenna requirement	Y	P
§15.207(a)	Conducted limits	N/A	N/A
§15.215(c)	20 dB bandwidth	Y	P
Specific requirements for FCC Part 15 Subpart C			
§15.209(c)	Radiated emission limits, general requirements	Y	P

Notes:
Possible test case verdicts:
test case does not apply to the test object: N/A (Not applicable)
test object does meet the requirement: P (Pass)
test object does not meet the requirement: F (Fail)

Appendix A: Test results

Clause 15.31(e) Variation of the power source

For intentional radiators, measurements of the variation of the input power or the radiated signal level of the fundamental frequency component of the emission, as appropriate, shall be performed with the supply voltage varied between 85 % and 115 % of the nominal rated supply voltage. For battery-operated equipment, the equipment tests shall be performed using a new battery.

Test date: 2018-05-22
Test results: Pass

Test data
Transmit output power was measured while supply voltage was varied from 10.2 V– 13.8 Vdc (greater 85 % to 115 % of the nominal rated supply voltage). No change in transmit output power and frequency was observed.

Clause 15.203 Antenna requirement

An intentional radiator shall be designed to ensure that no antenna other than that furnished by the responsible party shall be used with the device. The use of a permanently attached antenna or of an antenna that uses a unique coupling to the intentional radiator shall be considered sufficient to comply with the provisions of this section. The manufacturer may design the unit so that a broken antenna can be replaced by the user, but the use of a standard antenna jack or electrical connector is prohibited. Further, this requirement does not apply to intentional radiators that must be professionally installed, such as perimeter protection systems and some field disturbance sensors, or to other intentional radiators which, in accordance with §15.31(d), must be measured at the installation site. However, the installer shall be responsible for ensuring that the proper antenna is employed so that the limits in this part are not exceeded.

Test date: 2018-05-23

Test results: Pass

Test data

– The EUT is professionally installed.

Detailed photo
Antenna for immobilizer integrated in the passive steering-lock unit
Ducati code: 652.4.024.1C

Caratteristica	Min.	Typ.	Max	Units
Induttanza	396	440	484	µH
Resistenza	3.99	4.2	4.41	Ω
Numero di spire	-	95	-	n.

Clause 15.207(a) Conducted limits

An intentional radiator that is designed to be connected to the public utility (AC) power line, the radio frequency voltage that is conducted back onto the AC power line on any frequency or frequencies, within the band 150 kHz to 30 MHz, shall not exceed the limits in the following table, as measured using a 50 µH/50 Ω line impedance stabilization network (LISN). Compliance with the provisions of this paragraph shall be based on the measurement of the radio frequency voltage between each power line and ground at the power terminal. The lower limit applies at the boundary between the frequency ranges.

Frequency of emission (MHz)	Conducted limit (dBµV)	
	Quasi-peak	Average
0.15–0.5	66 to 56*	56 to 46*
0.5–5	56	46
5–30	60	50
*Decreases with the logarithm of the frequency.		

Test date: N/A

Test results: N/A

Special notes

N/A

Clause 15.215(c) 20 dB bandwidth

Intentional radiators operating under the alternative provisions to the general emission limits, as contained in §§15.217 through 15.257 and in Subpart E of this part, must be designed to ensure that the 20 dB bandwidth of the emission, or whatever bandwidth may otherwise be specified in the specific rule section under which the equipment operates, is contained within the frequency band designated in the rule section under which the equipment is operated. The requirement to contain the designated bandwidth of the emission within the specified frequency band includes the effects from frequency sweeping, frequency hopping and other modulation techniques that may be employed as well as the frequency stability of the transmitter over expected variations in temperature and supply voltage. If frequency stability is not specified in the regulations, it is recommended that the fundamental emission be kept within at least the central 80 % of the permitted band in order to minimize the possibility of out-of-band operation.

Test date: 2018-05-23

Test results: Pass

Special notes
None

Test data

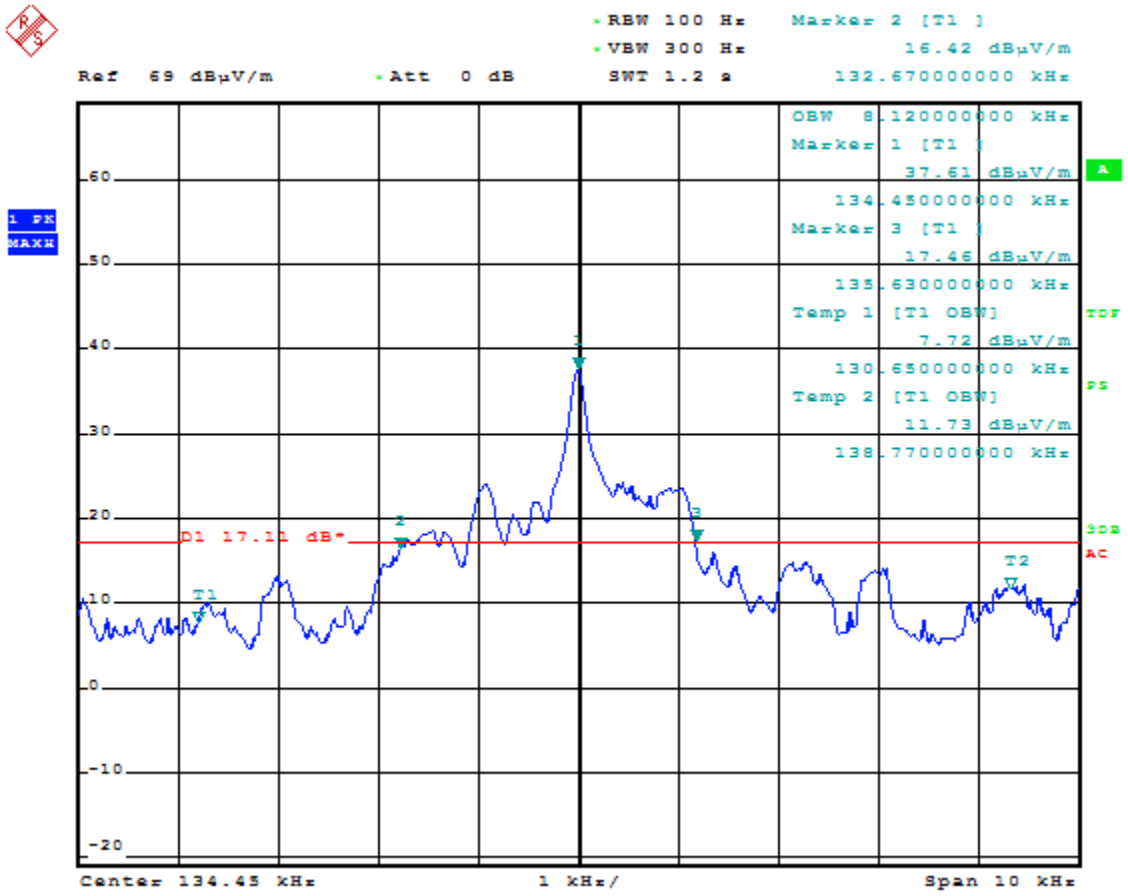

20 dB bandwidth	Limit	Margin
2.96 kHz	No requirements	--

Clause 15.209() Field Strength of any emissions

Except as provided elsewhere in this Subpart, the emissions from an intentional radiator shall not exceed the field strength levels specified in the following table:

Frequency (MHz)	Field strength		Measurement distance (m)
	(µV/m)	(dBµV/m)	
0.009–0.490	2400/F	67.6–20log(F)	300
0.490–1.705	24000/F	87.6–20log(F)	30
1.705–30.0	30	29.5	30
30–88	100	40.0	3
88–216	150	43.5	3
216–960	200	46.0	3
above 960	500	54.0	3

Notes:
– F = frequency in kHz
– In the emission table above, the tighter limit applies at the band edges.
– For frequencies above 1 GHz the limit on peak RF emissions is 20 dB above the maximum permitted average emission limit applicable to the equipment under test.

Test date: 2018-05-22

Test results: Pass

Clause 15. 209 Field Strength of any emissions continued

Special notes

- The spectrum was searched from 9 kHz to the 10th harmonic.
- The EUT was measured on three orthogonal axis.
- All measurements were performed at a distance of 10 m (9 kHz to 30 MHz) and 3 m (30 MHz to 6 GHz)
- All measurements were performed:
  - below 30 MHz: using a quasi-peak detector with 9 kHz/30 kHz RBW/VBW,
  - within 30–1000 MHz range: using a quasi-peak detector with 120 kHz/300 kHz RBW/VBW,
  - above 1 GHz: using peak detector with 1 MHz/3 MHz RBW/VBW for peak results
    - and using averagedetector with 1 MHz/10 Hz RBW/VBW for average results
    - Only the worst data presented in the test report.

§ 15.205 Restricted bands of operation.

MHz	MHz	MHz	GHz
0.090–0.110	16.42–16.423	399.9–410	4.5–5.15
0.495–0.505	16.69475–16.69525	608–614	5.35–5.46
2.1735–2.1905	16.80425–16.80475	960–1240	7.25–7.75
4.125–4.128	25.5–25.67	1300–1427	8.025–8.5
4.17725–4.17775	37.5–38.25	1435–1626.5	9.0–9.2
4.20725–4.20775	73–74.6	1645.5–1646.5	9.3–9.5
6.215–6.218	74.8–75.2	1660–1710	10.6–12.7
6.26775–6.26825	108–121.94	1718.8–1722.2	13.25–13.4
6.31175–6.31225	123–138	2200–2300	14.47–14.5
8.291–8.294	149.9–150.05	2310–2390	15.35–16.2
8.362–8.366	156.52475–156.52525	2483.5–2500	17.7–21.4
8.37625–8.38675	156.7–156.9	2690–2900	22.01–23.12
8.41425–8.41475	162.0125–167.17	3260–3267	23.6–24.0
12.29–12.293	167.72–173.2	3332–3339	31.2–31.8
12.51975–12.52025	240–285	3345.8–3358	36.43–36.5
12.57675–12.57725	322–335.4	3600–4400	Above 38.6
13.36–13.41			

Clause 15. 209 Field Strength of any emissions

Test data, continued

Distance @10 m

Frequency (MHz)	Level (dBµV/m)	Limit (dBµV/m)	Margin (dB)	Detector
0.1345	37.3	84.1	-46.8	PK
0.1345	28.7	84.1	-55.4	QP
0.1345	17.7	84.1	-66.4	AV

Clause 15. 209 Field Strength of any emissions

Test data, continued

Antenna in horizontal polarization @ 3 m

Frequency (MHz)	Level (dBµV/m)	Limit (dBµV/m)	Margin (dB)	Detector
80.0100	37.3	40.0	-2.7	QP
80.1000	27.3	40.0	-12.7	QP
91.9800	23.2	43.5	-20.3	QP
96.0000	23.8	43.5	-19.7	QP
111.9900	26.4	43.5	-17.1	QP
127.9800	31.0	43.5	-12.5	QP
159.9900	31.0	43.5	-12.5	QP
207.9900	23.0	43.5	-20.5	QP
259.9800	19.9	46.0	-26.1	QP
387.9900	17.5	46.0	-28.5	QP

Clause 15. 209 Field Strength of any emissions

Test data, continued

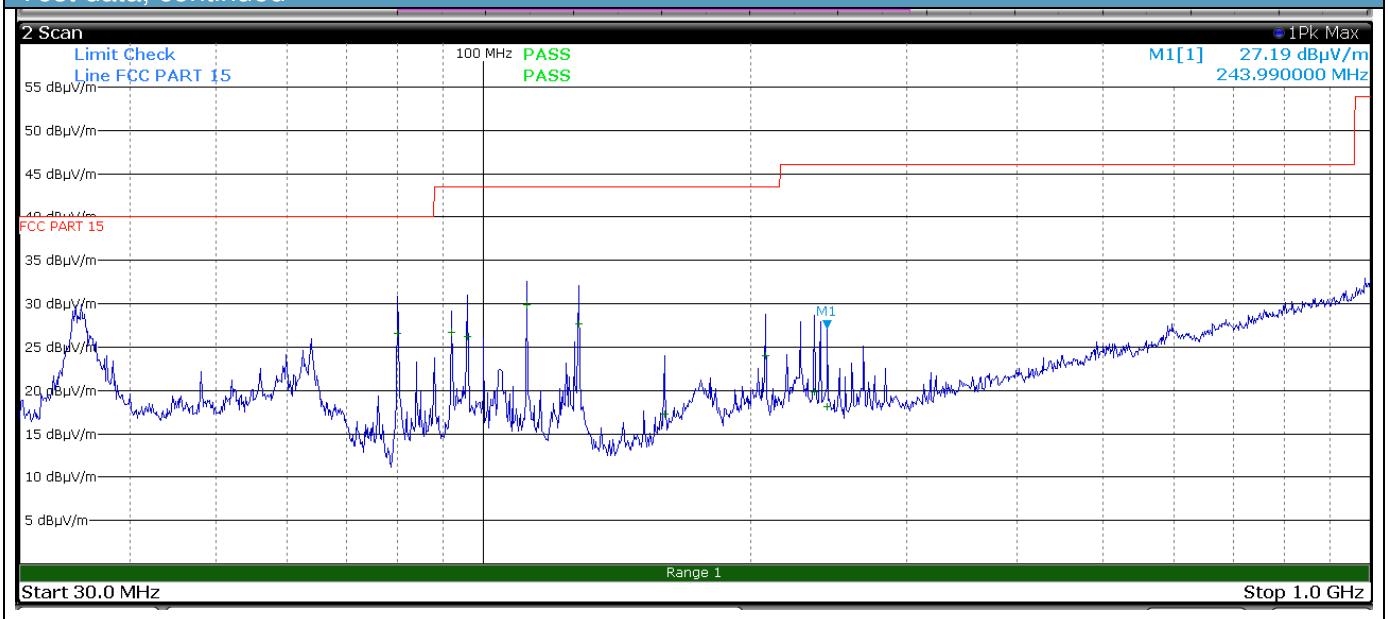

Antenna in vertical polarization @ 3 m

Frequency (MHz)	Level (dBµV/m)	Limit (dBµV/m)	Margin (dB)	Detector
80.0100	26.7	40.0	-13.3	QP
92.0100	26.7	43.5	-16.8	QP
96.0000	26.3	43.5	-17.2	QP
112.0200	30.0	43.5	-13.5	QP
127.9800	27.7	43.5	-15.8	QP
159.9900	17.3	43.5	-26.2	QP
208.0200	24.0	43.5	-19.5	QP
235.9800	19.9	46.0	-26.1	QP
243.9900	18.1	46.0	-27.9	QP

Clause 15. 209 Field Strength of any emissions

Test data, continued

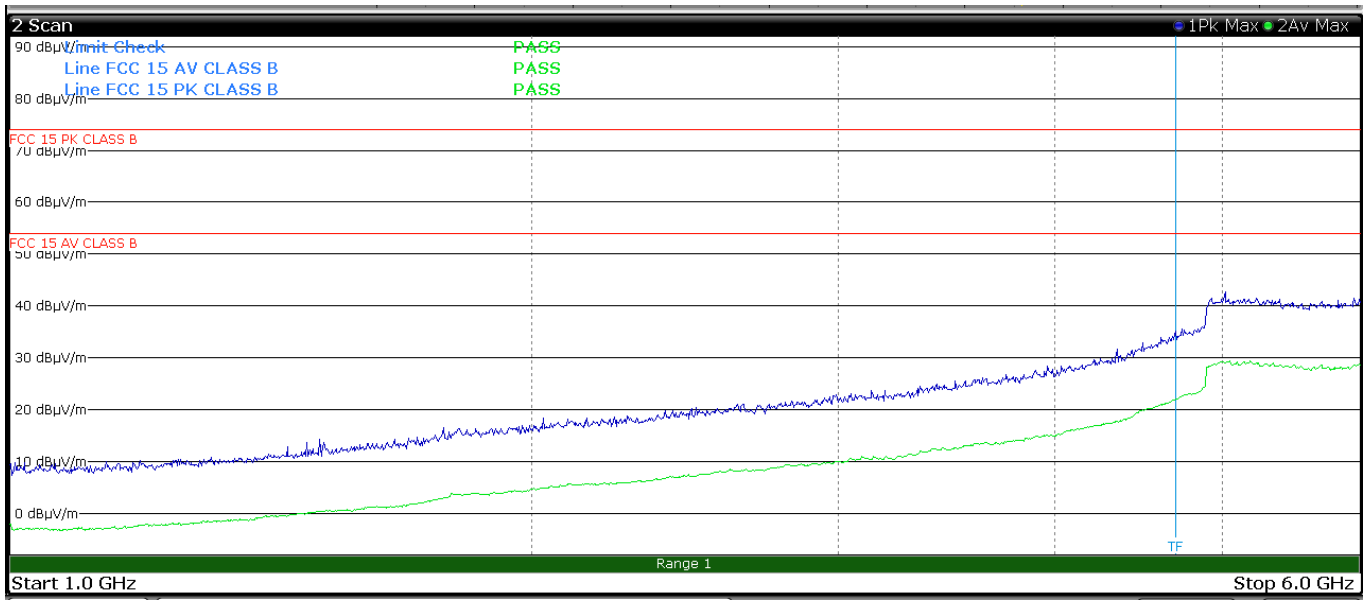

Antenna in horizontal polarization @ 3 m

Frequency (MHz)	Level (dBµV/m)	Limit (dBµV/m)	Margin (dB)	Detector
--	--	--	--	--

Clause 15. 209 Field Strength of any emissions

Test data, continued

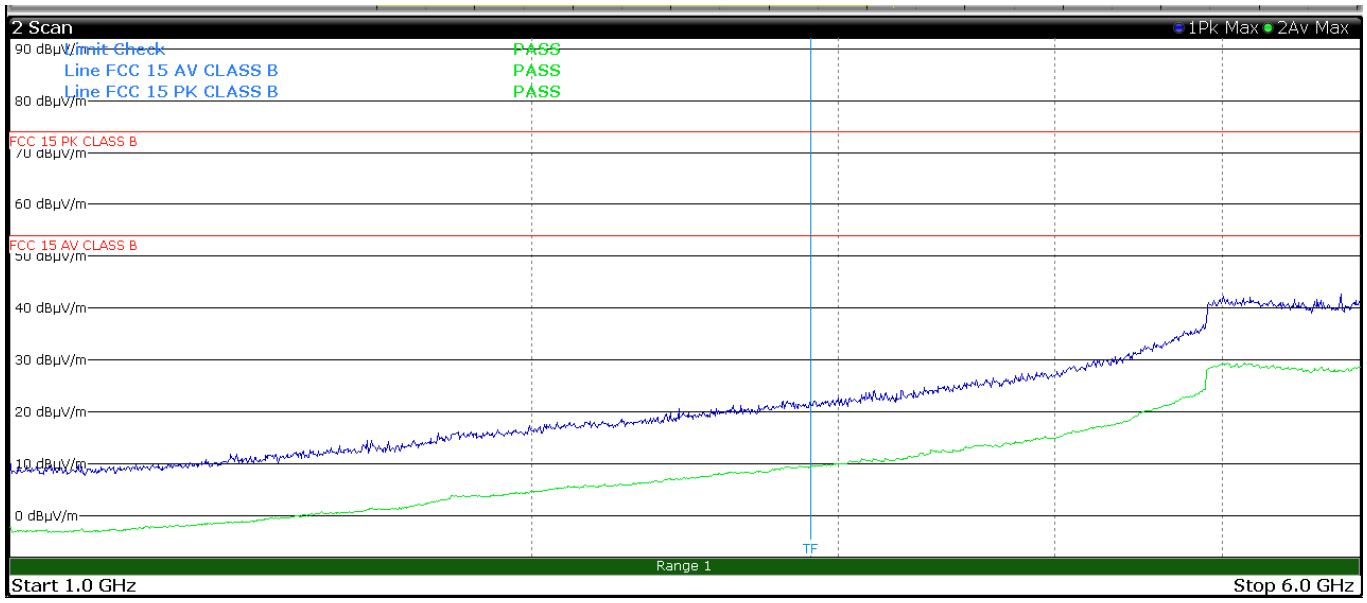

Antenna in vertical polarization @ 3 m

Frequency (MHz)	Level (dBµV/m)	Limit (dBµV/m)	Margin (dB)	Detector
--	--	--	--	--

Clause 15. 209 Field Strength, continued

Set up photo

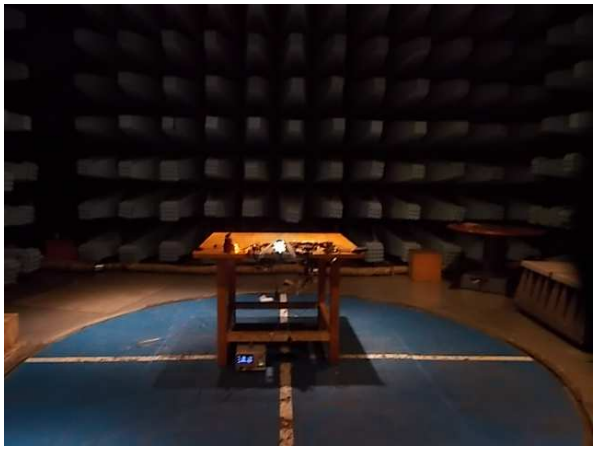

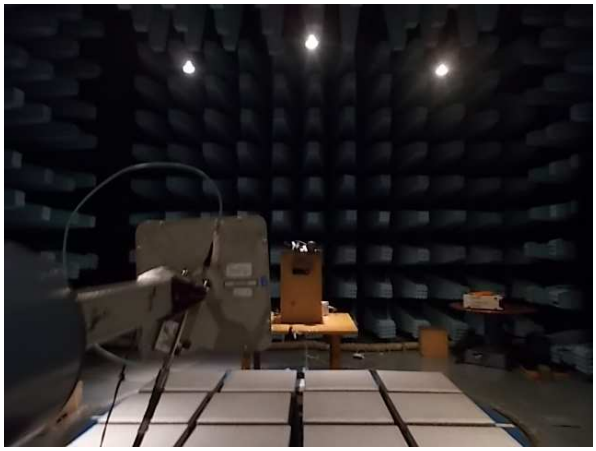

Appendix B: Block diagrams of test set-ups

Radiated emissions set-up above 30 MHz

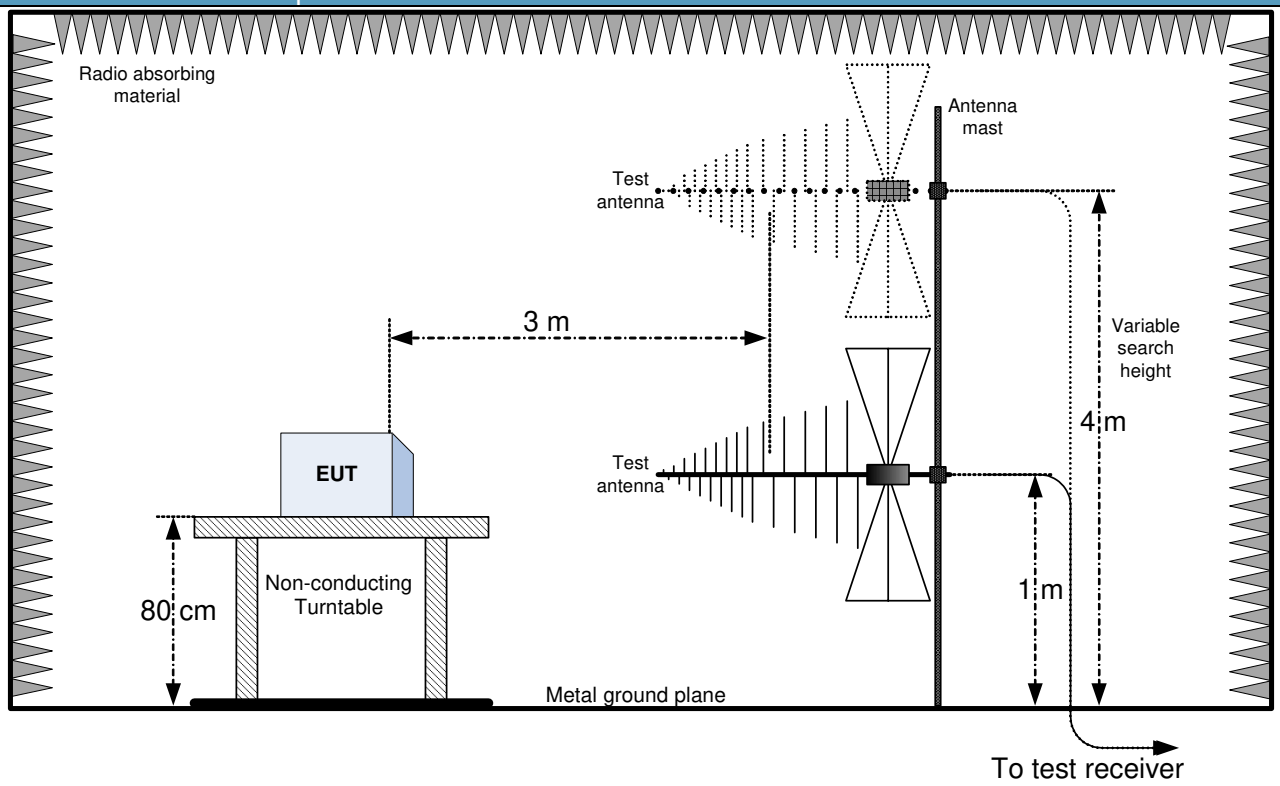

Radiated emissions set-up below 30 MHz

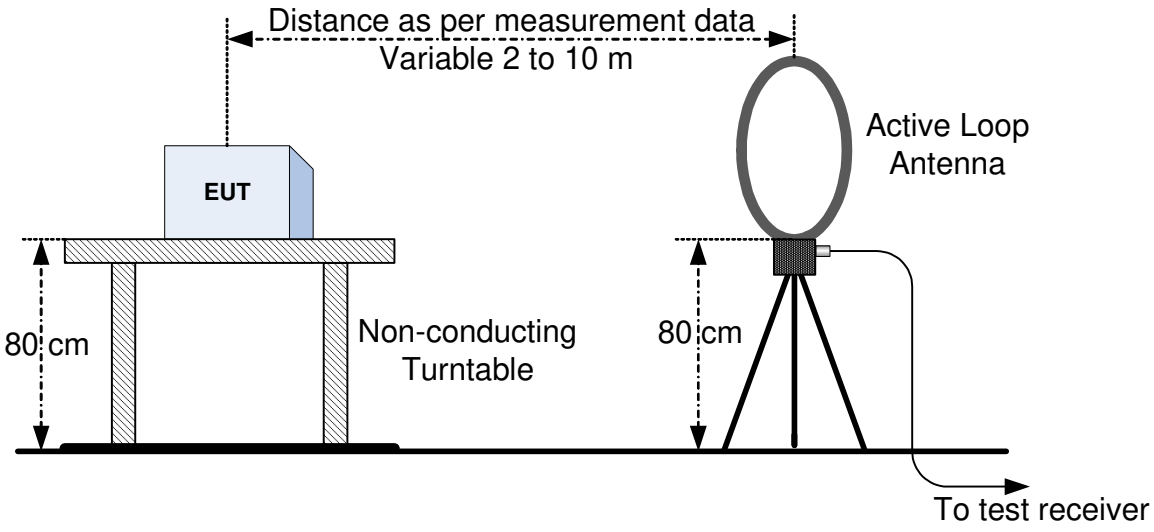

Block diagram, continued

Conducted emissions set-up

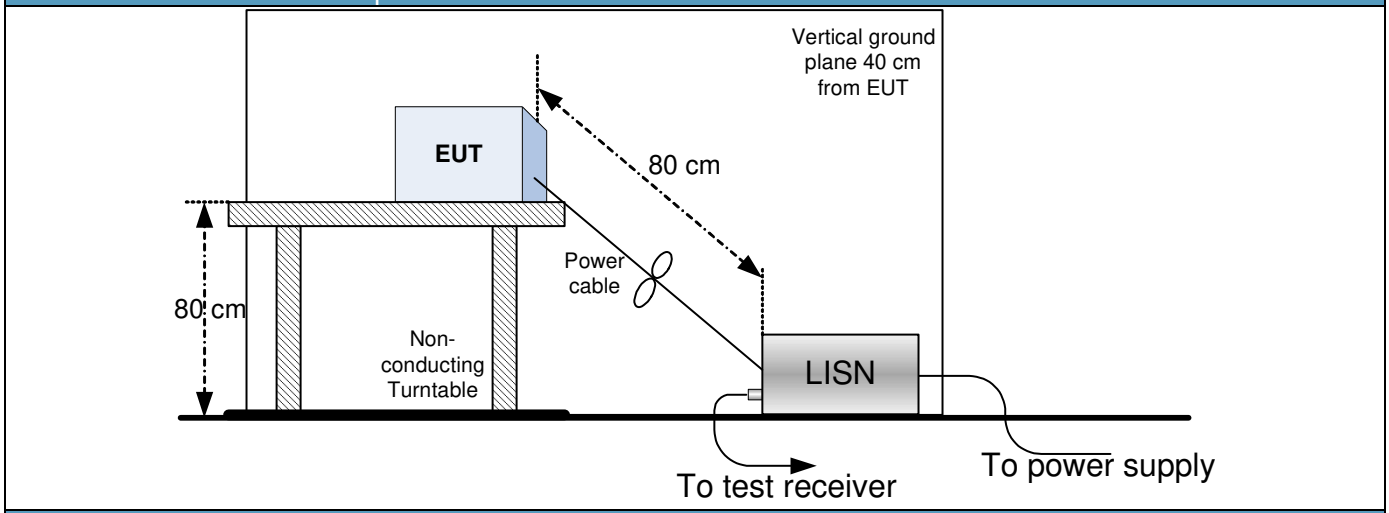

Frequency stability set-up

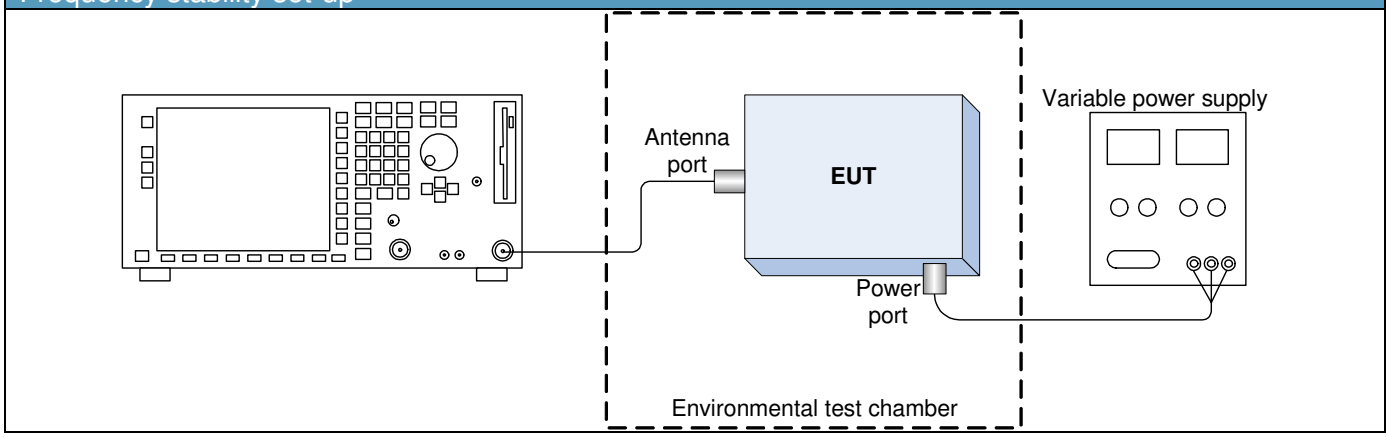

Appendix C: EUT photos

Front ZDM1604-D-00

Front ZDM1604-F-00

Back ZDM1604
Images (Int)

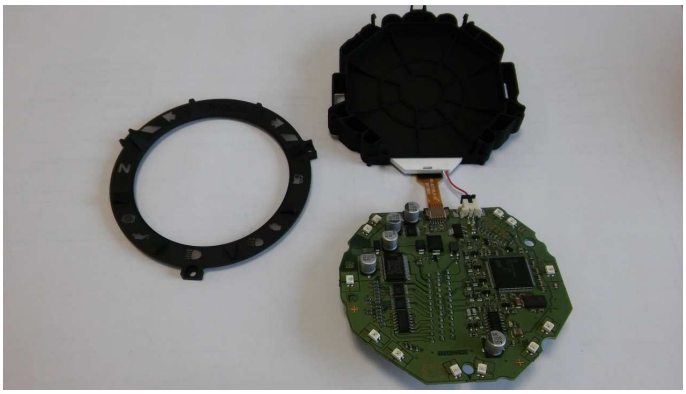

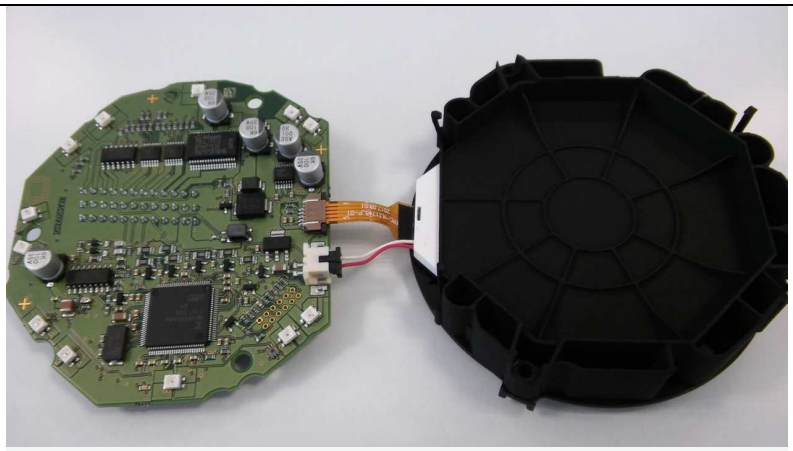

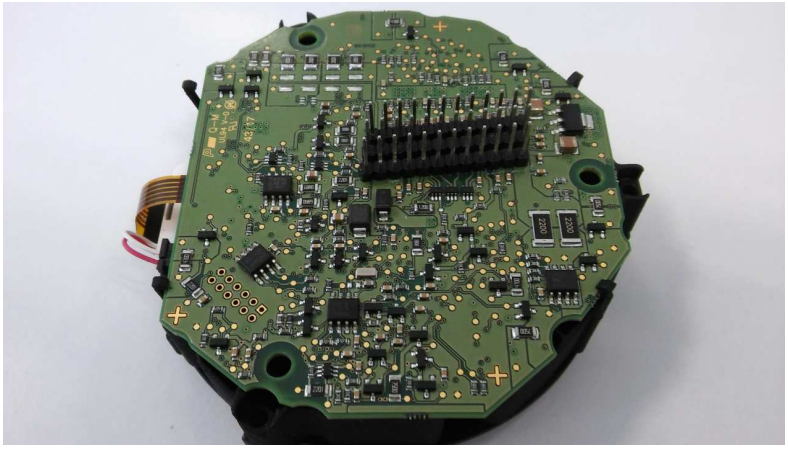

Label images

Final label (ZDM1604-D-00)

Final label (ZDM1604-F-00)

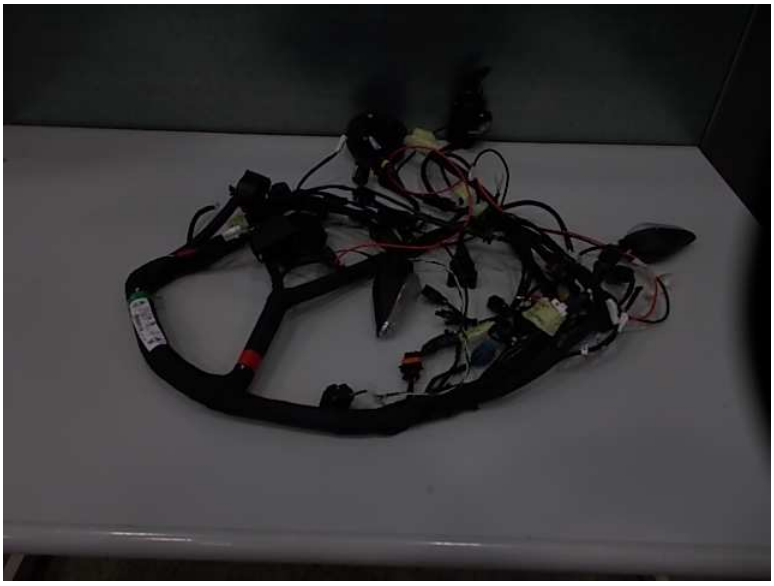

EOL 254.6

510.1.C5a.a
NP
REV 00

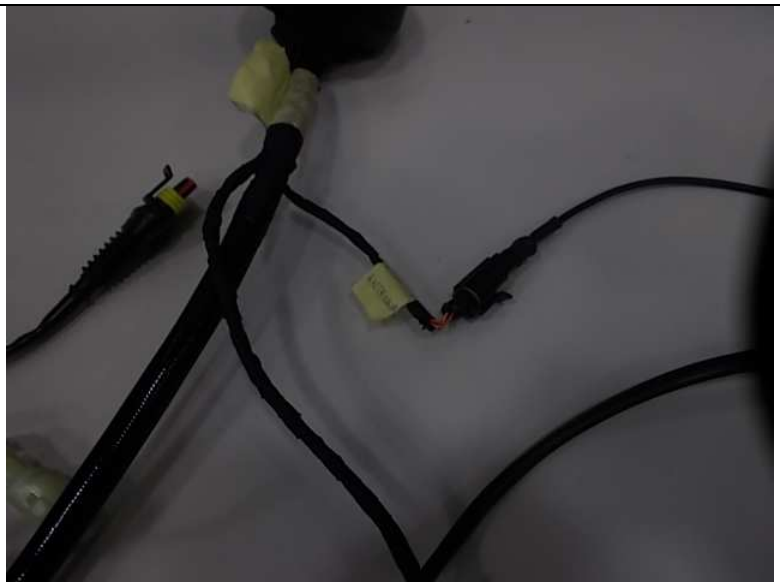

End of report