HF RFID SYSTEM

READ/WRITE MODULES (RWM)

RLH-xxxxA-NHx

HOUSING	READ/WRITE DISTANCE
M18	34 mm
M30	50 mm
C44	78 mm
C23	36 mm
C88	120mm

- ✓ 20x32 mm plastic housing (C23)
- ✓ Metal threaded housing (M18, M30)
- ✓ Sensing face of PBTP
- ✓ Insensitive to dirt
- ✓ IO-Link V1.1.3
- ✓ 2× PNP output in SIO mode configurable
- ✓ IP 68/69K (C44, C23, C88)

ISO 15693

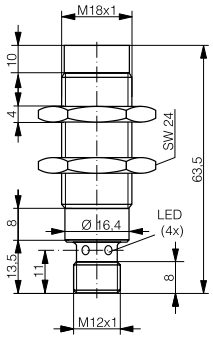

RLH-M18PA-NHS

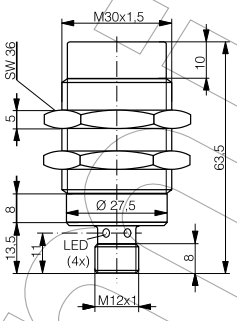

RLH-M30PA-NHS

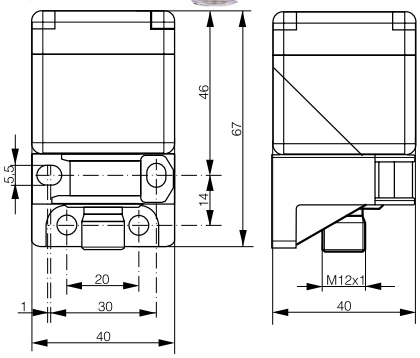

RLH-C44PA-NHS

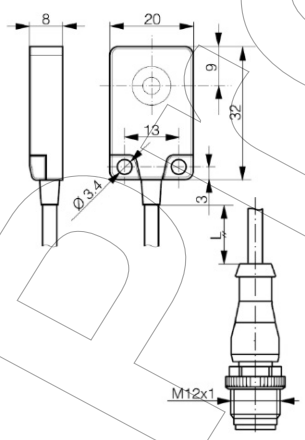

RLH-C23TA-NHV-224

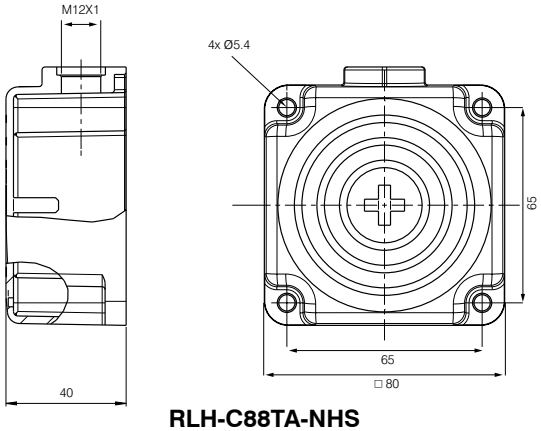

RLH-C88TA-NHS

Preliminary

GENERAL DATA	
Carrier frequency	13.56 MHz
Compatible standard	ISO 15693[1]
Maximum transmission speed	26.5 kbit/s
Maximum field strength (at 3 m/30 m)	RLH-M18PA-NHS: 45.4 / 4.6 dBμV/m RLH-M30PA-NHS: 55.1 / 14.9 dBμV/m RLH-C44PA-NHS: 66.7 / 26.4 dBμV/m RLH-C23TA-NHV-224: TBD / TBD dbμV/m RLH-C88TA-NHS: TBD / TBD dbμV/m
Read-write distance max. (RSSI ≥ 0) with Ø50 mm transponder	RLH-M18PA-NHS: 34 mm RLH-M30PA-NHS: 50 mm RLH-C44PA-NHS: 78 mm RLH-C23TA-NHV-224: 36 mm RLH-C88TA-NHS: 120 mm

INTERFACE	
Data transfer rate	230,400 baud
LEDs	See “LED status” on p. 3
IO-Link	✓
MTTF (@ 40°C)	TBD

[1] Protocol anti-collision excluded. A maximum of one transponder can be detected at a time by the RWM, otherwise “TAGCommError” is reported

ELECTRICAL DATA	
Supply voltage range (Ub)	11…32 VDC
Max. current consumption (no load)	≤ 50 mA
Max. output current	≤ 200 mA (RLH-C23TA-NHV-244: ≤ 100 mA)
Short-circuit protection	✓
Voltage reversal protection	✓
Cable length max.	≤ 20 m

[2] Read/write operations possible
[3] Data retention and mechanical stability limit
[4] (on M12 connector)
[5] (on M3 screw)

MECHANICAL DATA	
Sensing face material	PBTP
Ambient temperature range TA[2]	−25…+80°C
Storage temperature range TS[3]	−25…+80°C
Housing material	See table “Available types” (p. 2)
Enclosure rating	See table “Available types” (p. 2)
Max. tightening torque	RLH-M18PA-NHS: 25 Nm RLH-M30PA-NHS: 70 Nm RLH-C44PA-NHS: 0.6 Nm[4] RLH-C23TA-NHV-224: 0.25 Nm[5] RLH-C88TA-NHS: 2 Nm
Weight (incl. nuts)	See table “Available types” (p. 2)

Preliminary

CONTRINEX AG Industrial Electronics
Route du Pâqui 3 – P.O. Box – CH 1720 Corminboeuf – Switzerland – Tel: +41 26 460 46 46
Fax: +41 26 460 46 40 – **Internet:** www.contrinex.com – **E-mail:** info@contrinex.com

MOUNTING RECOMMENDATIONS

CLEARANCE

Read/write modules must not mutually influence each other. For this reason, a minimum distance of b between the devices must be observed.

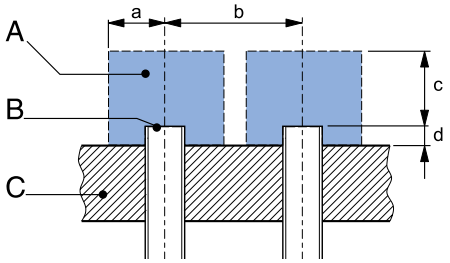

[mm]	RLH-M18PA-NHS	RLH-M30PA-NHS
a	30	45
b	54	90
c	60	90
d	10	10

A : unique transponder zone
B : sensing face
C : support

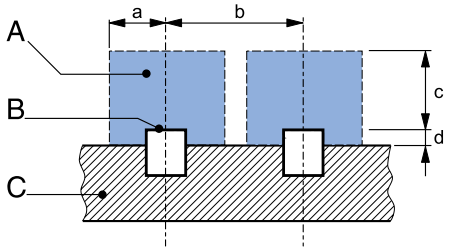

[mm]	RLH-C44PA-NHS	RLH-C23TA-NHV-224	RLH-C88TA-NHS
a	60	45	180
b	120	90	360
c	120	90	360
d	10	8	45

IO-LINK CHARACTERISTICS	VALUE
Vendor ID	0x0156
Device ID	0xAB0600
IO-Link Protocol	1.1.3
SIO-Mode	Supported
Process data	32 bytes input / 32 bytes output
Baudrate	COM3 (230.4 kBaud)
Minimum cycle time	10 ms
Supported Access Locks	Parameter: no, Data Storage: yes, Local Parameterization: no, Local User Interface: no
Sub Index Access	No sub index addressing possible except otherwise specified

IODD files may be downloaded from

https://www.contrinex.com/collections/rfid

Select the product name to display the product page with corresponding downloads.
Alternatively, just click/scan the QR code on the left.

PIN ASSIGNMENT

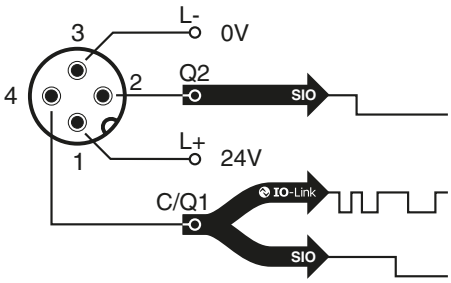

AVAILABLE TYPES

Part number	Part reference	Sensing face	Housing material	Mounting	Enclosure rating	Connection	Weight
720-100-224	RLH-M18PA-NHS	∅ 18	Chrome-plated brass	Non-embeddable	IP67	M12 4-pin	37 g
720-100-225	RLH-M30PA-NHS	∅ 30	Chrome-plated brass	Non-embeddable	IP67	M12 4-pin	87 g
720-100-226	RLH-C44PA-NHS	40×40 mm	PBTP	Non-embeddable	IP68 & IP69K	M12 4-pin	105 g
720-100-229	RLH-C23TA-NHV-224	32 x 20 mm	PBTP	Non-embeddable	IP67	PUR 0,3m+M12 4-pin	19 g
720-100-228	RLH-C88TA-NHS	80 x 80 mm	PBTP	Non-embeddable	IP67	M12 4-pin	256 g

Preliminary

CONTRINEX AG Industrial Electronics
Route du Pâqui 3 – P.O. Box – CH 1720 Corminboeuf – Switzerland – Tel: +41 26 460 46 46
Fax: +41 26 460 46 40 – **Internet:** www.contrinex.com – **E-mail:** info@contrinex.com

POSSIBLE COMBINATION AND TYPICAL DISTANCE (RSSI ≥ 1)

	RLH-M18PA-NHS			RLH-M30PA-NHS			RLH-C44PA-NHS		
Transponder type	S_{max} [mm]	S_0 [mm]	D_0 [mm]	S_{max} [mm]	S_0 [mm]	D_0 [mm]	S_{max} [mm]	S_0 [mm]	D_0 [mm]
Ø 9 RTP-0090-020	11	3.5	15	17	5.5	24	24	9	32
Ø 9 RTH-D09RA-NF0	11	3.5	15	17	5.5	24	24	9	32
Ø 16 RTP-0160-020	19	8.5	22	28	13	31	40	20	44
Ø 16 RTH-D16RA-NF0	19	8.5	22	28	13	31	40	20	44
Ø 20 RTH-D20QA-ND0	17	6	21	26	11.5	31	38	17	42
Ø 20 RTH-D20QA-NF0	18	8	21	26	12	30	40	18	44
Ø 26 RTP-0263-020	15	4	21	33	15	36	38	17	44
Ø 30 RTH-D30QA-ND0	19	5	28	34	15	38	46	23	52
Ø 30 RTH-D30QA-NF0	22	9	28	30	13	38	44	21	48
Ø 50 RTH-D50QA-ND0	20	0	44	44	18	54	58	26	66
Ø 50 RTH-D50QA-NF0	24	6	42	46	19	54	64	32	68
Ø 50 RTP-0502-022	34	10	42	50	23	54	78	41	80
Ø 50 RTP-0502-062	20	4	39	46	20	52	46	20	52

	RLH-C88TA-NHS			RLH-C23TA-NHV-224		
Transponder type	S_{max} [mm]	S_0 [mm]	D_0 [mm]	S_{max} [mm]	S_0 [mm]	D_0 [mm]
Ø 30 RTH-D30QA-NDO	80	40	90	27	30	14
Ø 30 RTP-0301-020	90	45	100	tbd	tbd	tbd
Ø 30 RTH-D30QA-NCO	60	30	75	27	30	14
Ø 50 RTP-0502-022	120	60	120	36	40	20

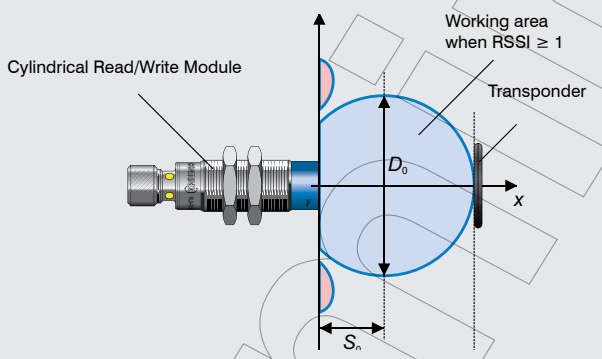

RLH-MxxxA-NHx

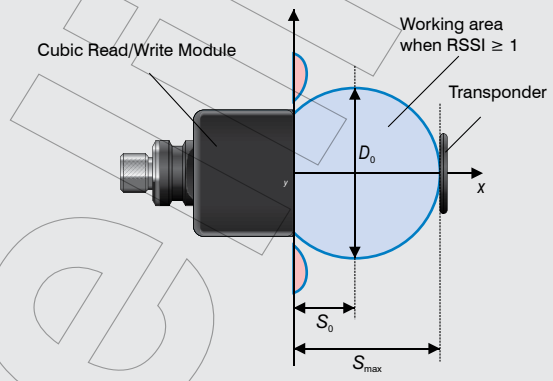

RLH-CxxxA-NHx

Preliminary

CONTRINEX AG Industrial Electronics
Route du Pâqui 3 – P.O. Box – CH 1720 Corminboeuf – Switzerland – Tel: +41 26 460 46 46
Fax: +41 26 460 46 40 – **Internet:** www.contrinex.com – **E-mail:** info@contrinex.com

LED STATUS

1: Tag RSSI level ≥ RSSI threshold – Transponder is located in RWM recommended working area
2: RWM RSSI threshold limit set by the end user in the RWM configuration parameter menu (idx: 42_h, sub_idx: 03_h)
3: Tag RSSI level < RSSI threshold – Transponder is located in RWM maximal sensing range
4: Tag is out of RWM sensing range

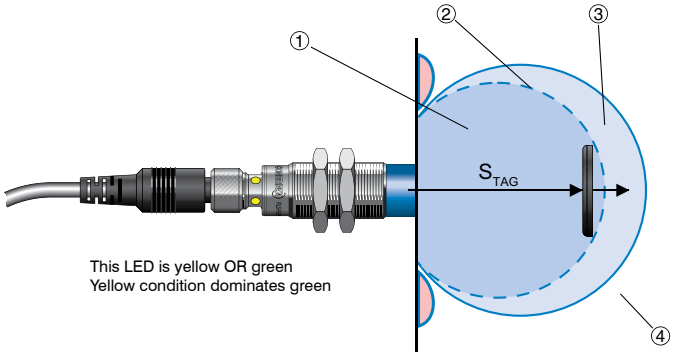

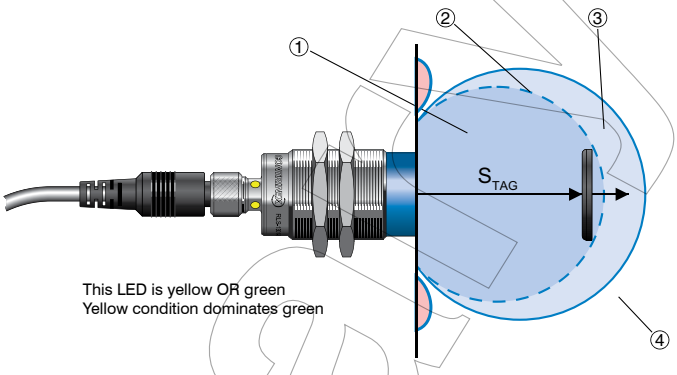

RLH-M18PA-NHS			
	Yellow		Green
	IO-Link	SIO	
ON	Area 1	Q1 is ON	RWM is ON and SIO Mode used
OFF	Area 4	Q1 is OFF	RWM is OFF
Blinking 1 Hz	–	–	RWM is ON and IO-Link Mode used
Blinking 5 Hz	Area 3	Q1 is Compare data & Area 3	Q1 is TAG presence & Area 3

RLH-M30PA-NHS			
	Yellow		Green
	IO-Link	SIO	
ON	Area 2	Q1 is ON	RWM is ON and SIO Mode used
OFF	Area 4	Q1 is OFF	RWM is OFF
Blinking 1 Hz	N/A	–	RWM is ON and IO-Link Mode used
Blinking 5 Hz	Area 3	Q1 is Compare data & Area 3	Q1 is TAG presence & Area 3

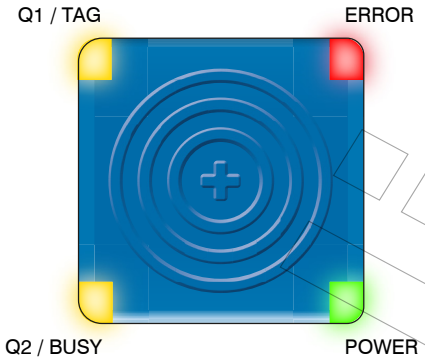

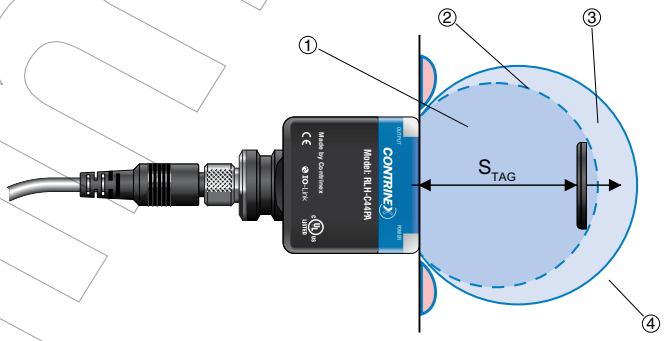

RLH-C44PA-NHS						
	Q1 / TAG		Q2 / BUSY		ERROR	POWER
	IO-Link	SIO	IO-Link	SIO		
ON	Area 1	Q1 is ON	–	Q1 is ON	Error occured	RWM is ON and SIO Mode used
OFF	Area 4	Q1 is OFF	No pending CMD	Q2 is OFF	No error	RWM is OFF
Blinking 1 Hz	–	–	RWM is Busy	–	–	RWM is ON and IO-Link Mode used
Blinking 5 Hz	Area 3	Q1 is TAG presence or data compare & Area 3	–	Q2 is TAG presence or data compare & Area 3-	–	–

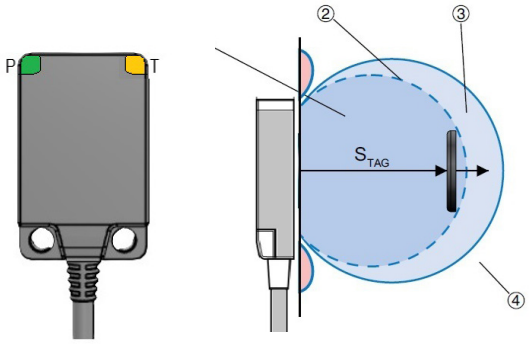

RLH-C23TA-NHV-224		
Display	LED status	Status
P LED (Green)	Static	SIO mode: the device is ready for use, no transponder detection
	Flashing (5 Hz)	SIO Or IO-Link Mode + Transponder SIO RSSI < RSSI threshold
	Flashing (1 Hz)	IO-Link mode no transponder detection
T LED (Yellow)	Static	SIO mode + Transponder detection RSSI ≥ RSSI threshold
	Flashing (5 Hz)	SIO Or IO-Link Mode + Transponder SIO RSSI < RSSI threshold
	Flashing (1 Hz)	IO-LINK mode +transponder detection and RSSI ≥ RSSI threshold

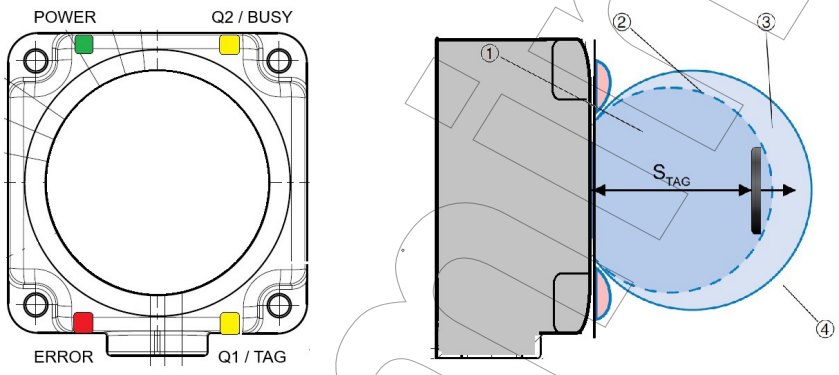

RLH-C88TA-NHS						
	Q1/TAG		Q2/BUSY		ERROR	POWER
	IO-Link	SIO	IO-Link	SIO		
ON	Area 1	Q1 is ON	–	Q1 is ON	Error occured	RWM is ON and SIO Mode used
OFF	Area 4	Q1 is OFF	No pending CMD	Q1 is OFF	No error	RWM is OFF
Blinking 1 Hz	–	–	RWM is Busy	–	–	RWM is ON and IO-Link Mode used
Blinking 5 Hz	Area 3	Q1 is TAG presence or data compare & Area 3	–	Q2 is TAG presence or data compare & Area 3-	–	–

Preliminary

CONFIGURATION PARAMETER (IO-LINK / SIO MODE)

Index	Sub Hex	Name	Access	Data Type	Value	Default
SYSTEM						
02_h	–	Standard Command	W	uint8	5 = ParamDownloadStore, 128 = Device Reset, 130 = Restore Factory Settings, 160 = Locate device (force all LEDs to blink during 30 seconds)	N/A
$0C_h$	–	Device Access Lock	R/W	uint16	Parameter Access, Data Storage, Local Parametrization and Local User Interface Locks	0000_h
$0D_h$	–	Profile Characteristic	R	uint16	No profile for identification devices - 0000_h	–
$0E_h$	–	PD Input Descriptor	R	array	Scan UID Mode {{1, 3, 4}, {1, 2, 8}, {2, 6, 10}, {2, 8, 16}, {2, 64, 24}, {2, 64, 88}, {2, 64, 152}} Scan R/W Mode {{2, 3, 0}, {1, 4, 4}, {1, 2, 8}, {2, 5, 10}, {2, 8, 16}, {0, 224, 24}}	–
$0F_h$	–	PD Output Descriptor	R	array	Scan UID Mode {{1, 1, 4}} Scan R/W Mode {{2, 4, 0}, {1, 1, 4}, {1, 1, 7}, {2, 3, 8}, {2, 8, 16}, {0, 224, 24}}	–
IDENTIFICATION						
10_h	–	Vendor Name	R	char [16]	"Contrinex"	–
11_h	–	Vendor Text	R	char [24]	"www.contrinex.com"	–
12_h	–	Product Name	R	char [16]	RLH-M18PA-NHS: "RLH-M18PA-NHS" RLH-M30PA-NHS: "RLH-M30PA-NHS" RLH-C44PA-NHS: "RLH-C44PA-NHS" RLH-C88PA-NHS: "RLH-C88PA-NHS" RLH-C23TA-NHV-224: "RLH-C23TA-NHV-224"	–
13_h	–	Product ID	R	char [16]	"00000000"	–
14_h	–	Product Text	R	char [64]	"IO-Link RFID reader"	–
15_h	–	Serial Number	R	char [16]	"00000000"	–
17_h	–	Firmware Revision	R	char [64]	"2.2.7"	–
18_h	–	Application Specific Tag	R/W	char [32]	<user string, 32 byte (variable length)>	<vendor specific>
READER PARAMETER SIO						
41_h	01_h	C/Q1 PIN SIO Operating Mode	R/W	uint8	00_h : Transponder Presence 01_h : Compare Data 02_h : Alarm 1 03_h : Alarm 2 04_h : No SIO	00_h
	02_h	SIO Start Address C/Q1	R/W	uint8	Transponder memory block address where to make the "Compare Data" operation	00_h
	03_h	C/Q1 SIO Data to compare	R/W	uint32	Reference data value stored in RWM memory to be compared to transponder data	00_h, 00_h, 00_h, 00_h
	04_h	C/Q1 PIN SIO Polarity	R/W	uint8	00_h : Output "close" if condition = true 01_h : Output "open" if condition = true	00_h
	05_h	Data Hold Time Output (C/Q1 & Q2)	R/W	uint8	00_h : No Hold Time 01_h : Hold Time 100 ms 02_h : Hold Time 200 ms 03_h : Hold Time 500 ms 04_h : Hold Time 1000 ms 05_h : Hold Time 2000 ms	00_h
	06_h	Q2 PIN SIO Operating Mode	R/W	uint8	00_h : Transponder Presence 01_h : Compare Data 02_h : Alarm 1 03_h : Alarm 2 04_h : No SIO	00_h
	07_h	SIO Start Address Q2	R/W	uint8	Transponder memory block address where to make the "Compare Data" operation	00_h
	08_h	Q2 SIO Data to compare	R/W	uint32	Reference data value stored in RWM memory to be compared to transponder data	00_h, 00_h, 00_h, 00_h

Preliminary

CONFIGURATION PARAMETER (IO-LINK / SIO MODE)

Index	Sub Hex	Name	Access	Data Type	Value	Default
	09_h	Q2 PIN SIO Polarity	R/W	uint8	00_h : Output "close" if condition = true 01_h : Output "open" if condition = true	00_h
RF CONFIGURATION						
42_h	03h	RSSI Threshold	R/W	uint8	0 = 0 1 = 1 2 = 2 3 = 3 4 = 4 5 = 5 6 = 6 7 = 7	01_h
TAG INFO						
43_h	01_h	UID	R	uint64	Data available only if transponder is in the RWM detection range when TAG INFO fields are read	–
	02_h	Transponder DSFID	R	uint8	Data available only if transponder is in the RWM detection range when TAG INFO fields are read	–
	03_h	Transponder AFI	R	uint8	Data available only if transponder is in the RWM detection range when TAG INFO fields are read	–
	04_h	Number of Memory Blocks	R	uint8	Data available only if transponder is in the RWM detection range when TAG INFO fields are read	–
	05_h	Memory Block Size	R	uint8	Data available only if transponder is in the RWM detection range when TAG INFO fields are read	–
	06_h	RSSI	R	uint8	Data available only if transponder is in the RWM detection range when TAG INFO fields are read	–
	07_h	IC Manufacturer Code	R	uint8	Data available only if transponder is in the RWM detection range when TAG INFO fields are read	–
	08_h	IC Reference	R	uint8	Data available only if transponder is in the RWM detection range when TAG INFO fields are read	–
UID LIST						
44_h	01_h	Tag history 1	R	uint64	Last transponder UID seen by RWM	–
	02_h	Time stamp Tag history 1	R	uint64	System time record when tag 1 entered in the RWM range	–
	03_h	Tag history 2	R	uint64	–	–
	04_h	Time stamp Tag history 2	R	uint64	System time record when tag 2 entered in the RWM range	–
	05_h	Tag history 3	R	uint64	–	–
	06_h	Time stamp Tag history 3	R	uint64	System time record when tag 3 entered in the RWM range	–
	07_h	Tag history 4	R	uint64	–	–
	08_h	Time stamp Tag history 4	R	uint64	System time record when tag 4 entered in the RWM range	–
	09_h	Tag history 5	R	uint64	First transponder UID seen by RWM (on a shift register of 5 UIDs)	–
	$0A_h$	Time stamp Tag history 5	R	uint64	System time record when tag 5 enters in the RWM range	–
ALARM						
47_h	01_h	Measurement Alarm 1 Configuration	R/W	uint8	0 = Always OFF 1 = Active	
	02_h	Measurement Alarm 1 Threshold	R/W	uint32	ALR1 goes TRUE if : RSSI ≤ Alarm 1 Threshold Tag IN RANGE Time ≤ Alarm 1 Threshold SIO CNT Q1/Q2 ≥ Alarm 1 Threshold	
	03_h	Measurement Alarm 1 Source	R/W	uint8	0 = RSSI 1 = Tag IN RANGE Time [ms] 2 = SIO CNT Q1 3 = SIO CNT Q2	
	04_h	Measurement Alarm 2 Configuration	R/W	uint8	0 = Always OFF 1 = Active	00_h

PRELIMINARY

CONTRINEX AG Industrial Electronics
Route du Pâqui 3 – P.O. Box – CH 1720 Corminboeuf – Switzerland – Tel: +41 26 460 46 46
Fax: +41 26 460 46 40 – **Internet:** www.contrinex.com – **E-mail:** info@contrinex.com

CONFIGURATION PARAMETER (IO-LINK / SIO MODE)

Index	Sub Hex	Name	Access	Data Type	Value	Default
	05_h	Measurement Alarm 2 Threshold	R/W	uint32	ALR2 goes TRUE if : RSSI ≤ Alarm 2 Threshold Tag IN RANGE Time ≤ Alarm 2 Threshold SIO CNT Q1/Q2 ≥ Alarm 2 Threshold	00_h, 00_h, 00_h, 00_h
	06_h	Measurement Alarm 2 Source	R/W	uint8	0 = RSSI 1 = Tag IN RANGE Time [ms] 2 = SIO CNT Q1 3 = SIO CNT Q2	00_h
DEVICE DESCRIPTION						
48_h	01_h	Function Tag	R/W	char [32]	<user string, 32 byte (variable length)>	<vendor specific>
	02_h	Location Tag	R/W	char [32]	<user string, 32 byte (variable length)>	<vendor specific>
DEVICE CHARACTERISTIC						
49_h	01_h	RFID Compatibility	R	char [32]	“13.56 MHz, ISO 15693”	–
	02_h	Read-write distance max	R	char [32]	RLH-M18PA-NHS: “20 mm with diam 30 mm SLIX tag” RLH-M30PA-NHS: “40 mm with diam 30 mm SLIX tag” RLH-C44PA-NHS: “60 mm with diam 50 mm SLIX tag” RLH-C88PA-NHS: “120 mm with diam 50 mm SLIX tag” RLH-C23TA-NHV-224: “30 mm with diam 50 mm SLIX tag”	–
	03_h	Supply voltage range (Ub)	R	char [16]	“11 … 32 VDC”	–
	04_h	Max. output current	R	char [16]	“≤ 200 mA”	–
	05_h	Ambient temperature range TA	R	char [16]	“−25 … +80°C”	–
	06_h	Storage temperature range TS	R	char [16]	“−25 … +80°C”	–
	07_h	Enclosure rating	R	char [16]	“IP67“	–
TRANSPONDER TIME MONITORING						
$4A_h$	01_h	System Time – Transponder IN	R	uint64	Record system time when transponder enters the RWM detection range [ms]	–
	02_h	System Time – Transponder OUT	R	uint64	Record system time when transponder leaves the RWM detection range [ms]	–
	03_h	Transponder IN RANGE Time	R	uint64	IN RANGE = Transponder OUT – Transponder IN	–
SECURITY						
58_h	01_h	Security Mode	R/W	unit8	0 = Security mode inactive 1 = SLI-S or SLIX-2 Security mode active (perform a login with the specified password before each read or write operation) 12 = EM4233SLIC Security mode active (perform a login with the specified password before each read or write operation)	00_h
	02_h	Password	W	uint32	Password is never readable to avoid end-user application counterfeiting	$8 \times 00_h$
DIAGNOSTIC						
59_h	01_h	System Time	R	uint64	The system time is reset at each RWM power down or in case the standard command 128 = Device Reset is sent to the RWM. System Time is given in [ms]	–
	02_h	Successful Login counter	R	uint32	Counter which counts the number of successful transponder Login since last RWM startup/reset	–
	03_h	Error Login counter	R	uint32	SIO CNT which counts the number of unsuccessful transponder Login since last RWM startup/reset	–
	04_h	Error counter	R	uint32	Counter which counts the number of RMW error since last RWM startup/reset	–
	05_h	Power-on cycles	R	uint32	Counter which counts the number of RMW Power on. This counter cannot be reset. Device must be powered > 550 ms to see the power on cycle counter incremented	–

DISCONTINUED

PROCESS DATA REPRESENTATION

PROCESS DATA STRUCTURE

PROCESS DATA INPUT

Bitoffset

Byte	7	6	5	4	3	2	1	0
0	RDY	ERR	TAG	ANT	RFU	CMDCOPY		
1	ERROR CODE						ALR2	ALR1
2	RSSI							
3	ADDRESS							
4-31	DATA 0 … 27 / UID7 … 0, STTI7 … 0, TIRT7 … 0							

ERROR CODE	Error Name	Description
1	CommandNotSupported	Error code values replied by the transponder to the RWM interrogation. Depend of ISO 15693 command set supported by the different transponder IC of the market. These are error code values defined by the ISO 15693 standard
2	FormatError	
3	OptionNotSupported	
5	CommandProblem	
6	CommTagError	
15	TagError	
16	NoMemoryBlock	
18	BlockProtected	
27	AppLOGError	RWM password (index 0x58) is not matching transponder password
30	TAGCommError	Indicates a transponder communication error (e.g. more than 1 transponder detected or transponder reply not understood)
255	AppGeneralError	General Error

Name	Value	Description
RDY	0 → 1 1 → 0	Command executed and new data available. If Auto-Read, Auto-Write or UID command is selected, bit toggling runs automically as long as a transponder is inside the RWM range
	0 1	No new data available yet
ERR	0	Command executed and no error
	1	Command executed but error
TAG	0	No tag present in front of the RWM
	1	Tag present in front of the RWM
ANT	0	RF field OFF
	1	RF field ON
RSSI	RSSI signal level coming from the transponder	
ERROR CODE	See ERROR CODE list on the left	
ALR2	0	Alarm 2 OFF
	1	Alarm 2 ON
ALR1	0	Alarm 1 OFF
	1	Alarm 1 ON
ADDRESS	First transponder memory block address where the R/W command was executed	
DATA 0 … 27	Read data LSB	
UID7 … 0	Transponder unique ID number	
STTI7 … 0	System time transponder IN. Data record when a transponder enters in the RWM range	
TIRT7 … 0	Transponder IN RANGE time	

PROCESS DATA OUTPUT

Bitoffset

Byte	7	6	5	4	3	2	1	0
0	START	RFU		N_ANT	RFU	CMD		
1	RFU					NB BLOCK		
2	RFU							
3	ADDRESS							
4-31	DATA 0 – DATA 27							

Name	Value	Description
START	0 → 1 1 → 0	Start the selected RFID operation when bit toggles. If Auto-Read, Auto-Write or UID command is selected, the bit is not used. The RFID command are sent automatically as long as a transponder is inside the RWM range
	0 1	IDLE
N_ANT	0	Switch ON RF Field
	1	Switch OFF RF Field
CMD	0	No command
	1	Auto-Read
	2	Auto-Write[1]
	3	Read
	4	Write
	5	UID and tag timings
NB BLOCK	Number of transponder memory block to R/W	
ADDRESS	First transponder memory block address where the R/W command will be executed	
Data 0	Data to be written LSB	
Data 27	Data to be written MSB	

[1] Note for EEPROM tags: Auto-write mode will constantly write to the detected tag and is intended for applications where the transponder is moving fast in the front of the RWM.

Preliminary

DISCLAIMERS

FCC information

This device complies with part 15 of the FCC rules. Operation is subject to the following two conditions:

(1) This device may not cause harmful interference, and

(2) this device must accept any interference received, including interference that may cause undesired operation.

Caution: Any changes or modifications not expressly approved by the party responsible for compliance could void the user's authority to operate the equipment.

Note: This equipment has been tested and found to comply with the limits for a Class A digital device, pursuant to part 15 of the FCC Rules. These limits are designed to provide reasonable protection against harmful interference when the equipment is operated in a commercial environment. This equipment generates, uses, and can radiate radio frequency energy and, if not installed and used in accordance with the instruction manual, may cause harmful interference to radio communications. Operation of this equipment in a residential area is likely to cause harmful interference in which case the user will be required to correct the interference at his own expense.

ISED information

This device contains licence-exempt transmitter(s)/receiver(s) that comply with Innovation, Science and Economic Development Canada's licence-exempt RSS(s). Operation is subject to the following two conditions:

1. This device may not cause interference
2. This device must accept any interference, including interference that may cause undesired operation of the device.

L'émetteur/récepteur exempt de licence contenu dans le présent appareil est conforme aux CNR d'Innovation, Sciences et Développement économique Canada applicables aux appareils radio exempts de licence. L'exploitation est autorisée aux deux conditions suivantes:

1. L'appareil ne doit pas produire de brouillage ;
2. L'appareil doit accepter tout brouillage radioélectrique subi, même si le brouillage est susceptible d'en compromettre le fonctionnement.

Contrinex information

Operators of the products we supply are responsible for compliance with measures for the protection of persons. The use of our equipment in applications where the safety of persons might be at risk is only authorized if the operator observes and implements separate, appropriate and necessary measures for the protection of persons and machines. Terms of delivery and rights to change design reserved.

Preliminary