ACTION CAMERA

A DIFFERENT ANGLE TO RECORD YOUR LIFE

USER MANUAL

Operation note

1 This product is high precision products, do not fall or impact.
2 Please don’t close to the camera with strong magnetic objects, such as magnets and motors, in addition to avoid the product near the issue of strong radio waves of objects, strong magnetic field may can cause product failure, or destroy images and sound.
3 Please don’t place the camera at a higher temperature or direct sunlight.
4 Please choose the brand Micro SD card, ordinary card can not guarantee normal use.
5 Please don’t store the micro SD card in or near the strong magnetic place to avoid missing Micro SD card storage data.
6 Charging process, if overheating, smoke, or smell, please pull out the power immediately, stop charging to avoid fire.
7 Please put the product out of reach of children when charging, power line may cause a child's accidental suffocation or shock
8 Please send the product in a cool, dry place and the vast dust.

Foreword

This sport camera is a High-end HD camera product which could meet the customer's needs , with powerful function for take HD videos, photos,Slow motion, voice recording, video display, and changeable battery , it's the best choice for outdoor sports photography, home security monitoring, waterproof photography, you can record your life whenever and wherever you want.

Multipurpose

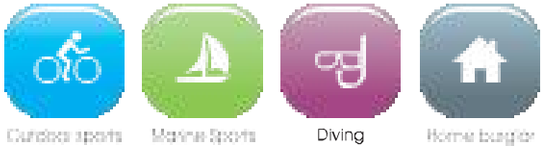

Product Feature

> Provide waterproof function waterproof shell, convenient for you to shoot wonderful water sports, waterproof shell can be deep waterproof 30 meters
> Shooting function
> Slow photography function
> Video resolution Max 5K@30fps
>170° Wide-angle lens
> Low power consumption
> Ultra HD 2.0 inch IPS screen with 1.44 inch screen, display and replay video shot
> Changeable battery, easy to replace , prolong the service life
> Charging function while recording
> HD video output function
> Supports up to 128GB memory card
> Multiple video recording formats 5K, 4K, 2.7K, 1080P, 720P
> H.264 format video recording
> A variety of shooting modes: normal,auto, brust,timer

Function introduction

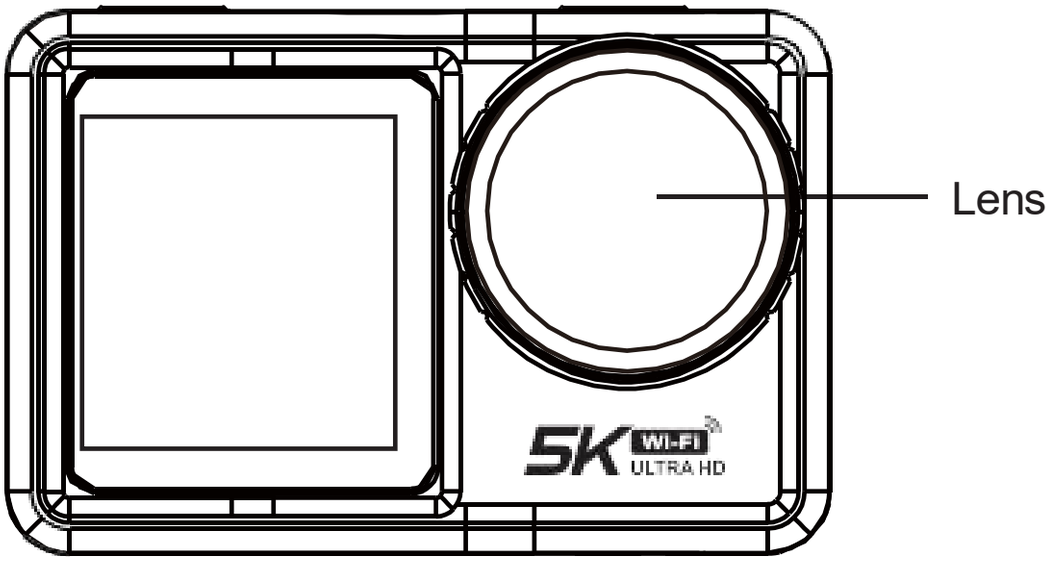

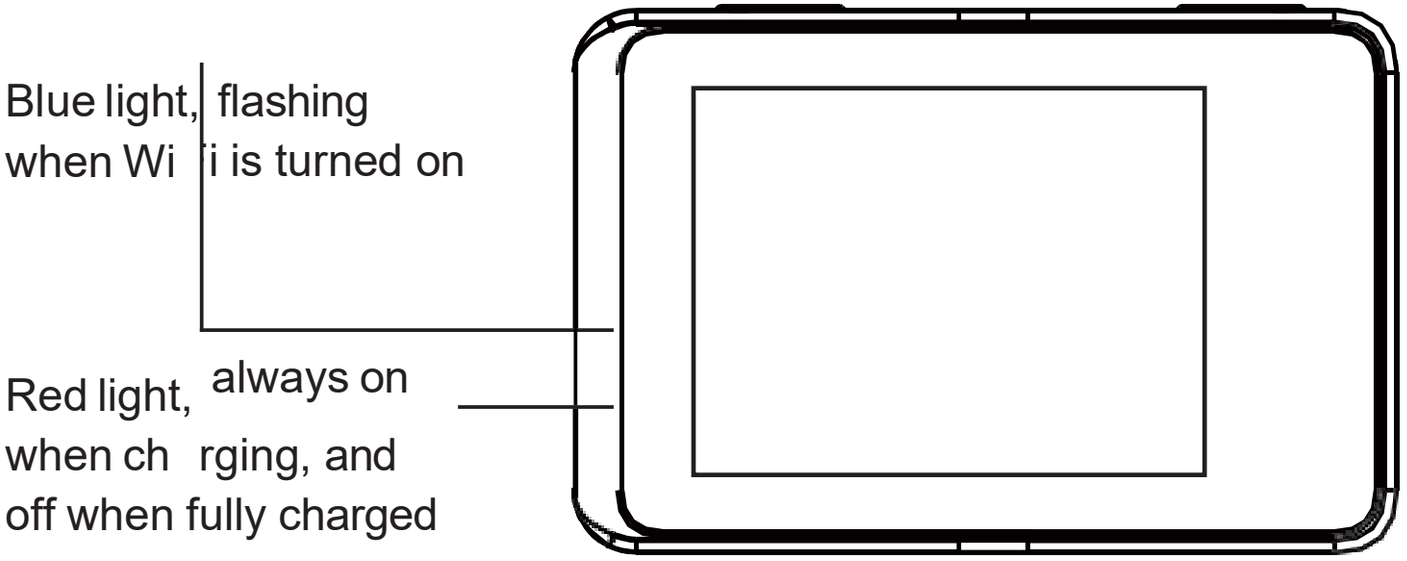

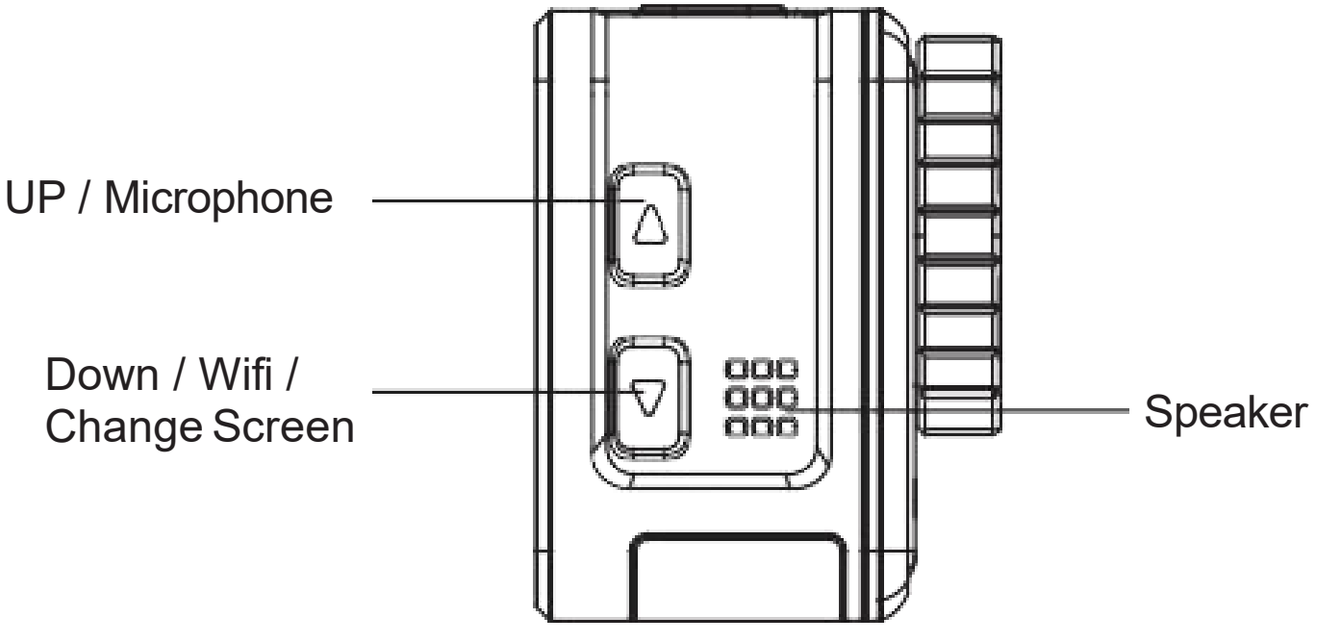
UP / Microphone
Down / Wifi /
Change Screen
Speaker

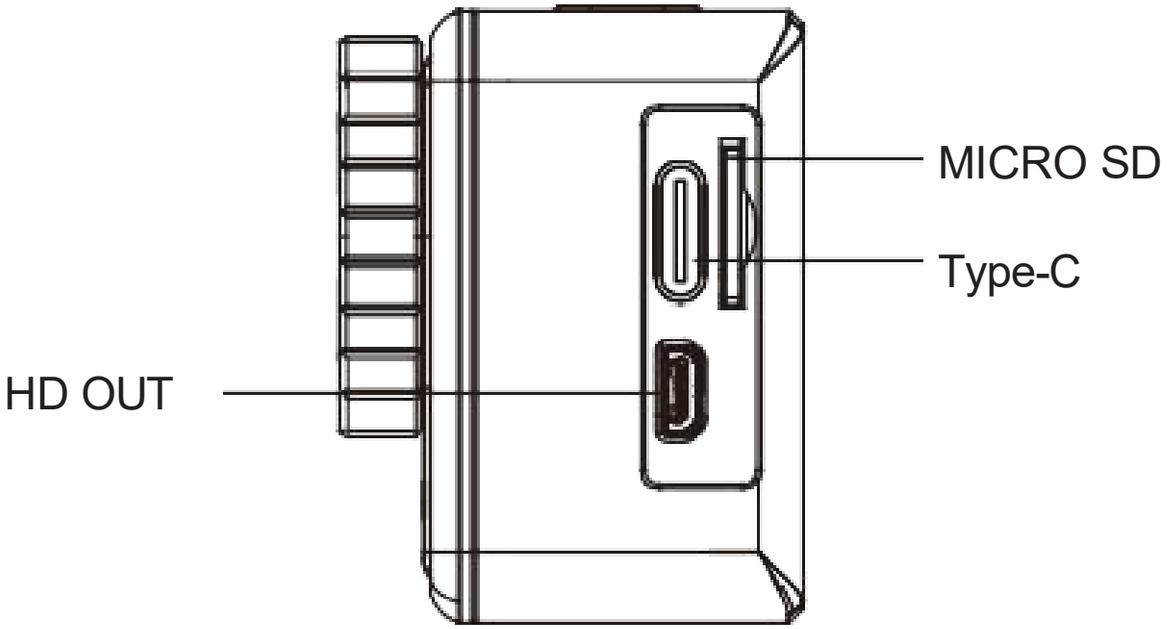
MICRO SD
Type-C
HD OUT

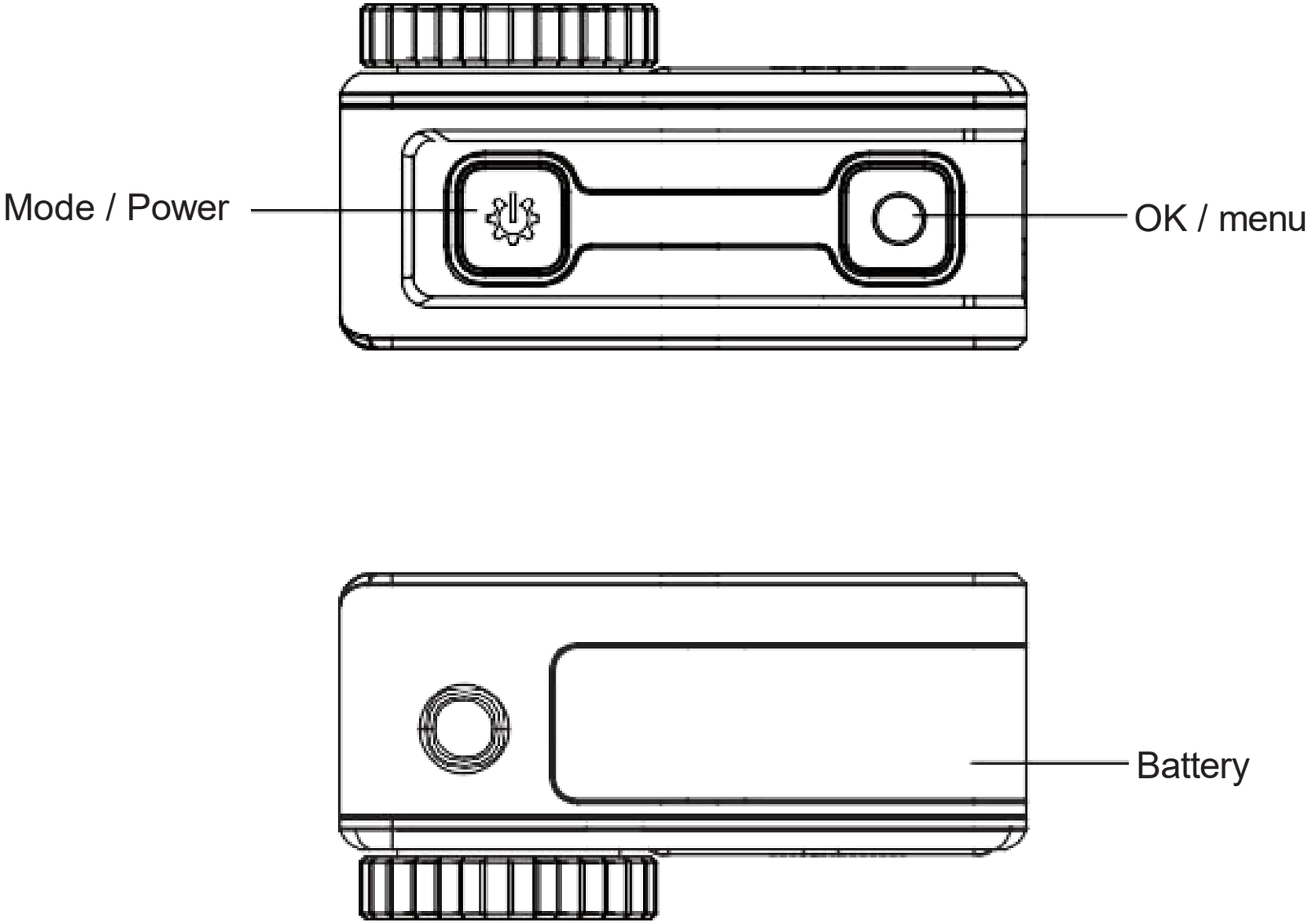
Mode / Power
OK / menu
Battery

Waterproof case

Main screen

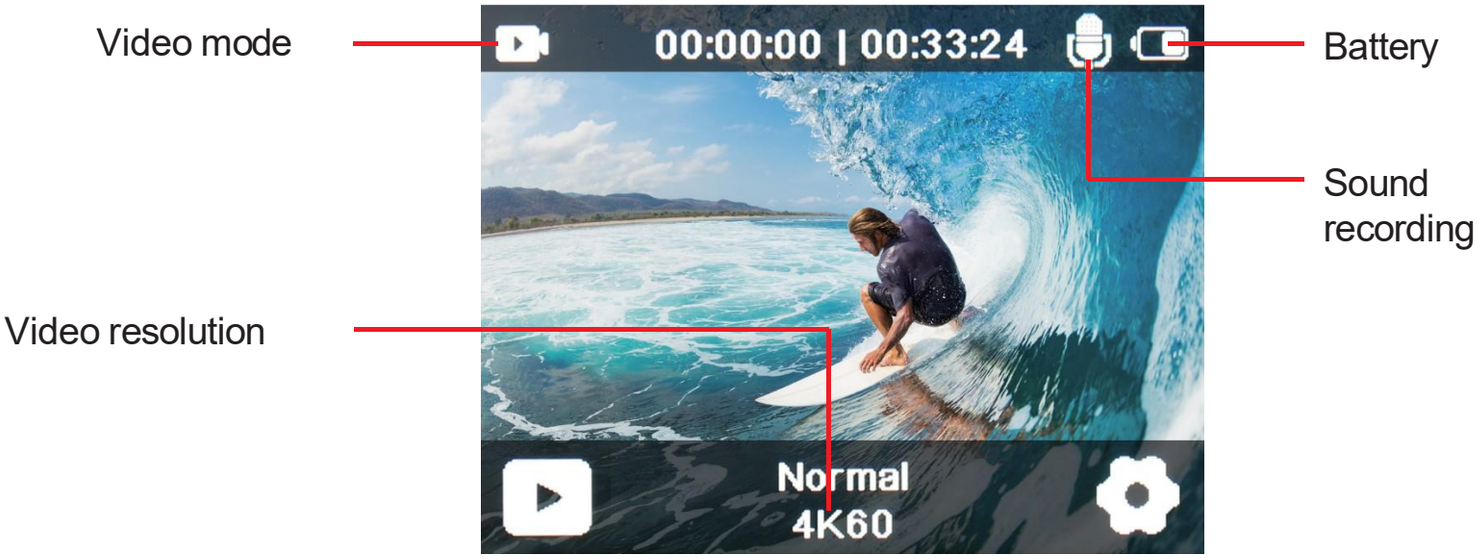
Video mode
00:00:00 | 00:33:24
Battery
Sound recording
Video resolution
Normal
4K60

00:00:03/00:00:04
Media play

Playback and setting interface：

On the home screen, press the mode key twice to enter the following playback and setting screen, press the mode key or down key to select, select and press the OK key to enter the specified function screen.

Function menu interface：

There are two ways to access the function menu:

a. Key operation：On the home screen, hold down the OK key for 3 seconds

b. Click the position indicated by the " " symbol on the main interface to enter the function setting interface

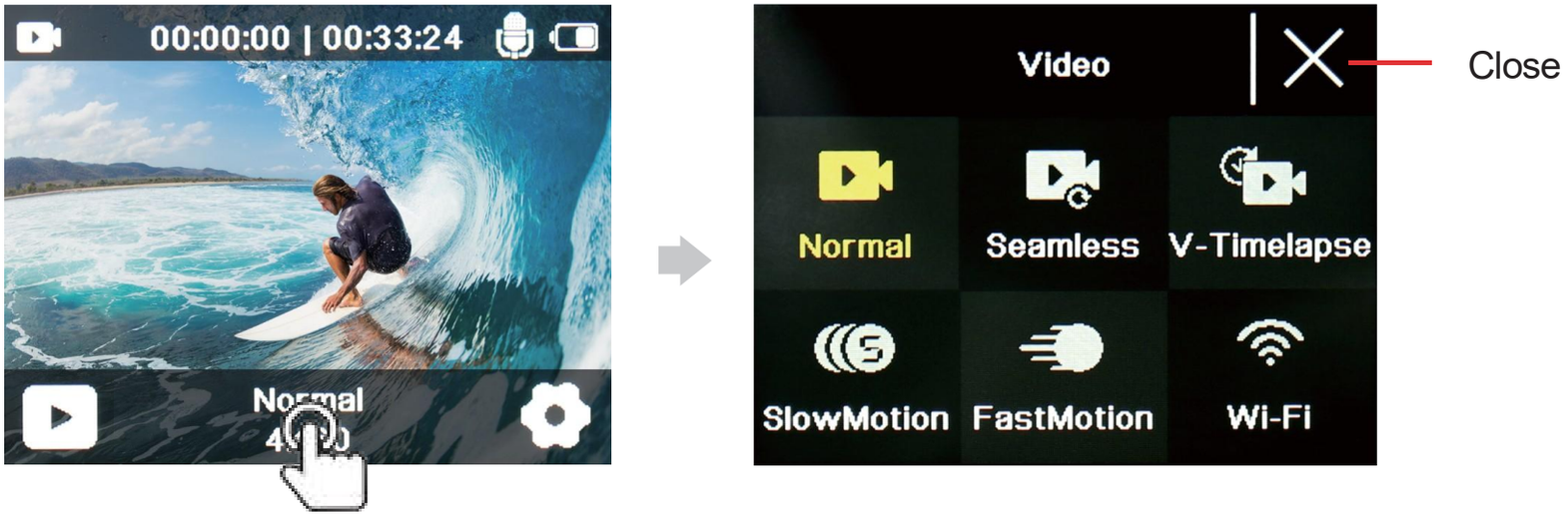

Video Settings menu interface:
There are two ways to access the function menu:
a. Key operation：In recording mode, press the mode key twice, select "Recording Settings", and press the OK key to enter the recording Settings menu
b. Touch screen operation：Click the icon in the lower right corner of the screen to enter the Settings menu

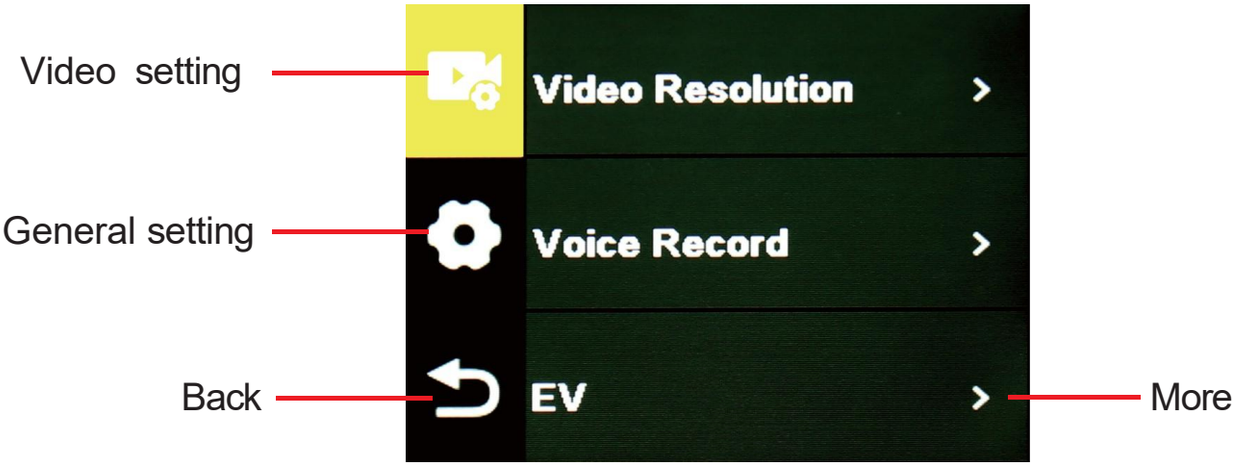

Use operation instructions

1. Insert Micro SD card
Note: Please select the brand MicroSD card, formatted on the computer and then use, ordinary neutral card can not guarantee the normal use of work.

2. Install and remove the battery
A. Pull the cover down can open the battery cover.
B. According the battery marked positive and negative symbols and arrows indicate direction, the correct battery into the camera until the installation is in place.
C. Battery power indicator: please refer to the icon.
D. Remove the battery, removed out of the battery after open battery cover .

3. Battery charging
A. with USB line connection to computer or power adapter ,the camera can be charged.
B. Can charge while recording.
C. shutdown state can also charge.

4. Camera on / off
Long press the mode key 3-5 seconds can turned on / off the camera.

5. turn WiFi on/off
Turn on WiFi: Short press the Down key to open the wifi, and wifi information will show on the screen .
Turn off WiFi: after opening WiFi, short press the Down key to turn off the wifi.

6. mode conversion

Long press the mode button to turn on, then it will automatically jump to the video mode, short press mode button to switch between video / photo mode.

In the mode of video/photo,long press OK button to enter the video setting.

7. how to set video and video options

1). Switch camera into the video mode, press the OK button to start recording, press OK button again to stop recording.

2)In the mode of video/photo,long press the OK button to enter the setting interface :

8. Photo and photo settings

Switch the camera to photo mode,short press the OK button to take a photo,long press the OK button to enter the setting.

9. Playback and delete video/photo

1) Switch the camera to playback mode,short press the OK button to playback the video/photo.

Press the up/down key to select the video/photo to playback.

2) In the mode of playback , long press the OK button to delete the video/photo

3) In the mode of playback, press down button to select the " Delete"icon, then press mode button and UP/Down button to select the video that you want to delete, finally long press OK button to delete the video

10. change screen display

long press down button can change the screen display

11. Storage

Take out the SD card and use the reader to copy the video/photo to computer to play

12. WiFi install and use

Before use the WiFi function, please download and install the application “iSmart DV2” on your smart phone.

Note：earch“iSmart DV2”from app store for IOS ; Search“iSmart DV2”from Google Play Store for android.

Steps to connect wifi.

A, Short press down button to turn on the WIFI, there will show WiFi information on the screen.

B,Open the WiFi on your phone, search the wifi name “sport-cameras’’ and connect (the original password is 1234567890);

C,Open "iSmart DV2" APP program ,with the APP, you can real-time preview is shooting pictures, remote video, photos, file playback / download / delete / share.

D.APP install guide, the phone system requires Android 4.1 and above or IOS7 or above, scan the "iSmart DV2" APP QR code ,press the prompts to complete the installation

iSmart DV2

Accessories

Waterproof Housing

Switch support 1

Switch support 2

Switch support 3

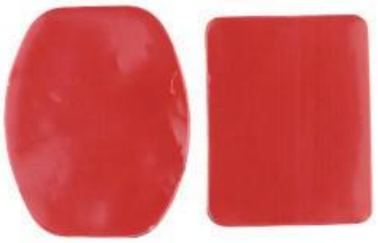

3M mat

Helmet pedestal

Bandage

USB Cable

Optional

Battery Compartment

Lanyard

Buoyancy Rod

Tripod

Assembly diagram

Basic specification of the camera

LCD	2.0 inch IPS HD screen + 1.44 inch screen
Color	Black
WIFI	Support
Lens	170 wide angle lens
Image resolution	48MP/24MP/20MP/16MP/14MP/10MP/8MP/5MP
Video resolution	5K （5120*2880）30fps
	4K(3840*2160)60/30fps
	2.7K（2688*1520）60/30fps
	1080P(1920*1080)120/60/30fps
	720P(1280*720)240/120/60/30fps
Memory	Micro SD card (maximum support 128GB)
Data Connections	USB 2.0/HDMI/WIFI
Battery	1350mAh polymer lithium battery
Charging time	About 1.5 hours
EIS	Support（4k30/2.7k30/1080p60/1080p30)
Dimensions	66 * 33 * 43.8 mm
Weight	83g
Language	Chinese, German, English, Spanish, French, Italian, Japanese, Korean, Portuguese, Russian, Thai, Traditional Chinese
Accessories	back clips, bike bracket, waterproof case, long stand, short stand,
	vertical stand, arc stand, round stand, bandages, tie, wire rope, 3M stickers, dust cover, USB cable, cleaning clothes, manual,etc.
Application	Extreme sports, outdoor sports, cycling, diving, driving records, etc.

Note: Specifications could be subject to modification due to updating,please regard the actual product as the standard form.

FCC WARNING

This device complies with part 15 of the FCCRules. Operation is subject to the following two conditions: (I) this device may not cause harmful interferenc

e, and (2) this device must accept any interference received, including interference that may cause undesired operation.

Any changes or modifications not expressly approved by the party responsible for compliance could void the user's authority to operate the equipment.

NOTE: This equipment has been tested and found to comply with the limits for a Class B digital device, pursuant to Part 15 of the FCCRules. These limi

ts are designed to provide reasonable protection against harmful interference in a residential installation. This equipment generates, uses and can radiate radio fr

equency energy and, if not installed and used in accordance with the instructions, may cause harmful interference to radio communications.

However, there is no guarantee that interference will not occur in a particular installation. If this equipment does cause harmful interference to radio or televi

sion reception,

which can be determined by turning the equipment off and on, the user is encouraged to try to correct the interference by one or more of the following me

asures:

-- Reorient or relocate the receiving antenna.

-- Increase the separation between the equipment and receiver.

-- Connect the equipment into an outlet on a circuit different from that to which the receiver is connected.

-- Consult the dealer or an experienced radio/TVtechnician for help.

The device has been evaluated to meet general RF exposure requirement. The device can be used in portable exposure condition without restriction