2016

ODE3528

The Industrial IoT Solution

User's Manual

Answer Technology Confidential Information – Not for External Distribution
© Answer Technology Co., Ltd. 2016, all rights reserved.

TABLE OF CONTECTS

FEATURES 2
GENERAL DESCRIPTION 2
ORDERING GUIDE 2
MODULE SPECIFICATIONS 3
Module Pin Configuration and Function Descriptions 4
Timing Specifications 6
Modules 7
Carrier Board 9
COMMUNICATION MODE 10
Transparent Mode: UART over 802.15.4 10
MODE 2: Contiki OS Mode 10
MODE 3: AT Comment + SDK 10
AT Comment List 11
DESIGN AND LAYOUT CONSIDERATION 13
Combined Differential PA/LNA Match 13
Ground Plant Configuration 14
Copper and Components Free Area Consideration 14
Module Name Rule 15
IMPORTANAT NOTES 15

Answer Technology Confidential Information – Not for External Distribution
© Answer Technology Co., Ltd. 2016, all rights reserved

FEATURES

For industrial internet of everything (IOT) used. Various sensors with Sug-G module for node data transfer to gateway with cloud to achieve different application, such like equipment monitor , smart agriculture, smart energy, smart machine.etc.

GENERAL DESCRIPTION

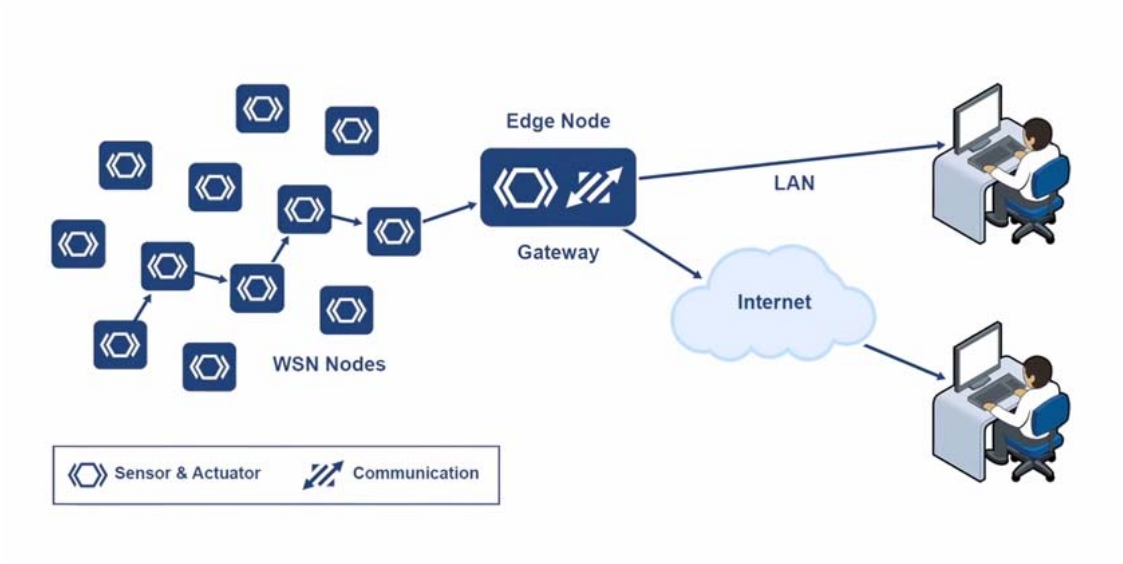

ORDERING GUIDE

Table 1. Features of ODE3528

Ordering Number	Frequency Band	Memory Size	On Board Antenna
ODE3528-915MHz	915MHz	256KB	Yes
ODE3528-920MHz	920MHz	256KB	Yes

Answer Technology Confidential Information
© Answer Technology Co., Ltd. 2016, all rights reserved

MODULE SPECIFICATIONS

V_{CC} = 2.7V to 3.6V, GND = 0V, T_A = T_{MIN} to T_{MAX}, unless otherwise noted. Typical specifications are at V_{CC} = 3.3V, GND = 0V, T_A=25°C.

Table 2. RF Module Parameter

	Sub-G			
Parameter	Min	Typ	Max	Unit
General Parameter				
Voltage Supply Range	2.7		3.6	V
Power Mode				
Transmit Current		33.4		mA
Idle / Receive Current		18.2		mA
Sleep Mode		9.8		µA
Frequency Range	902		928	MHz
Operating Temperature Range	0		+70	˚C
RF Parameter				
Single-Ended PA				
Maximum Power		13.5		dBm
Minimum Power		-20		dBm
Data Rate				
GFSK/FSK Mode	1		300	kbps
Receiver Sensitivity (At BER = 1E-3)				dBm
1 kbps (Deviation=4.8 kHz, IF band width=100 kHz)		-116		dBm
300 kbps (Deviation=75kHz, IF band width=300 kHz)		-100.5		dBm
Logic Levels				
VIL (Input Low Voltage)			0.8	V
VIH (Input High Voltage)	2.0			V
VOL (Output Low Voltage)			0.4	V
VOH (Output Hight Voltage)	VCC-0.4			V
Output/Sink Current	±12.5		±20	mA

Answer Technology Confidential Information – Not for External Distribution
© Answer Technology Co., Ltd. 2016, all rights reserved

Module Pin Configuration and Function Descriptions

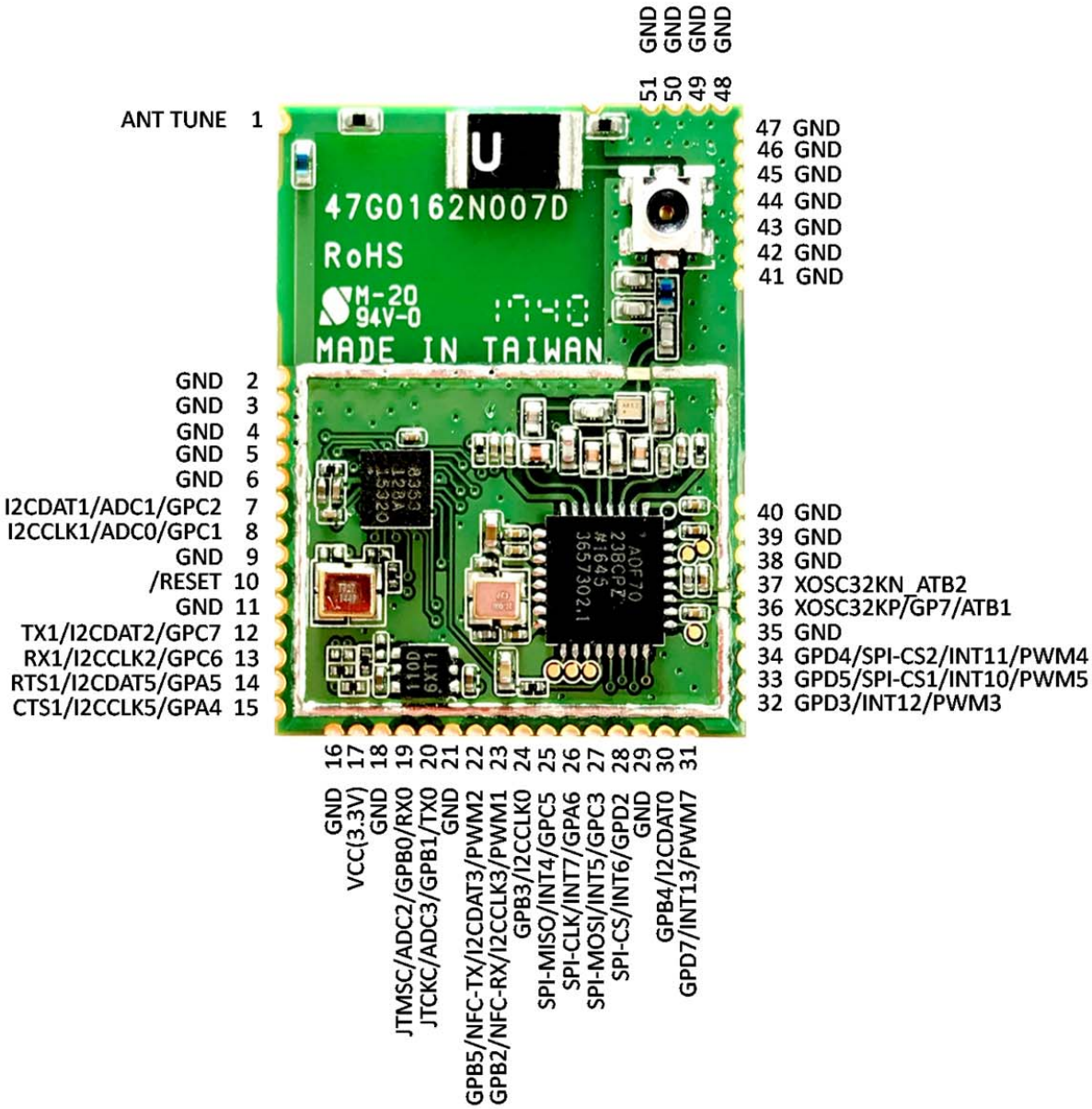

Figure 1. ODE3528-915/920MHz Module Pin Configuration (Top View)

Answer Technology Confidential Information
© Answer Technology Co., Ltd. 2016, all rights reserved

Table 3. ODE3528-915/920MHz Module Pin Function Descriptions

Pin No.	ITE Pin	Mnemonic	Description
1, 52			External Antenna Tuning Element
2, 3, 4, 5, 6, 9 11, 16, 18, 21 29, 35, 38, 39 40, 41, 42, 43 44, 45, 46, 47 48, 49, 50, 51		GND	Common Ground Terminal.
7	A3	I2CDAT1/ADC1/GPD4	I^2C Data/ADC Single-Ended Input/General-Purpose IO Port.
8	B2	I2CCLK1/ADC0/GPC1	I^2C Clock/ADC Single-Ended Input/General-Purpose IO Port.
10	A2	/RESET	Reset Input, Active Low.
12	A1	TX1/I2CDAT2/GPC7	UART Output/I^2C Data/General-Purpose IO Port.
13	B1	RX1/I2CCLK2/GPC6	UART Input/I^2C Clock/General-Purpose IO Port.
14	D1	RTS1/I2CDAT5/GPA5	Request-to-Send Signal in UART Mode/I^2C Data/General-Purpose IO Port.
15	E1	CTS1/I2CCLK5/GPA4	Clear-to-Send Signal in UART Mode/I^2C Clock/General-Purpose IO Port.

Pin No.	ITE Pin	Mnemonic	Description
17		VCC(3.3V)	3.3 V Input Power.
19	E2	JTMSC/ADC2/GPB0/RX0	JTAG Clock/ADC Single-Ended Input/General-Purpose IO Port/UART Input.
20	E3	JTCKC/ADC3/GPB1/TX0	JTAGData/ADC Single-Ended Input/General-Purpose IO Port/UART Output.
22	E4	GPB5/NFC-TX/I2CDAT3/PWM2	General-Purpose IO Port/NFC Data output/I2C Data/PWM Output.
23	E5	GPB2/NFC-RX/I2CCLK3/PWM1	General-Purpose IO Port/NFC Data Input/I2C Clock/PWM Output.
24[1]	C4	GPB3/I2CCLK0	For RF Transceiver IRQ, General-Purpose IO Port/I^2C Clock
25[1]	D2	SPI-MISO/INT4/GPC5	SPI Interface Serial Data Output/Interrupt Request Input/General-Purpose IO Port.
26[1]	D5	SPI-CLK/INT7/GPA6	SPI Interface Data Clock Output/Interrupt Request Input/General-Purpose IO Port.
27[1]	D3	SPI-MOSI/INT5/GPC3	SPI Interface Serial Data Input/Interrupt Request Input/General-Purpose IO Port.
28[1]	D4	SPI-CS/INT6/GPD2	SPI Interface Chip Select/Interrupt Request Input/General-Purpose IO Port.
30	C5	GPB4/I2CDAT0	General-Purpose IO Port/ I^2C Data
31	B5	GPD7/INT13/PWM7	General-Purpose IO Port/Interrupt Request Input/PWM Output.
32	B4	GPD3/INT12/PWM3	General-Purpose IO Port/Interrupt Request Input/PWM Output.
33	A5	GPD5/SPI-CS1/INT10/PWM5	General-Purpose IO Port/SPI Interface Chip Select Output/Interrupt Request Input/PWM Output.
34	A4	GPD4/SPI-CS2/INT11/PWM4	General-Purpose IO Port/SPI Interface Chip Select Output/Interrupt Request Input/PWM Output.
36		XOSC32KP/GP7/ATB1	Terminal 1 of 32 kHz Crystal Oscillator/General-Purpose IO Port/Analog Test Bus 1.
37		XOSC32KN_ATB2	Terminal 2 of 32 kHz Crystal Oscillator/Analog Test Bus 2.

[1]The default is connected to ADF7023 SPI interface internally.

Answer Technology Confidential Information – Not for External Distribution
© Answer Technology Co., Ltd. 2016, all rights reserved

Timing Specifications

UART Receiver Package (Mode x)

Figure 2. ODE3528 UART Receiver Frame package

Answer Technology Confidential Information
© Answer Technology Co., Ltd. 2016, all rights reserved

Modules

The ODE3528 RF module offers two types of frequency band of 6LoWPAN protocol which base on 802.15.4 physical.

- **Sub-GHz RF module:** ADF7023 transceiver supports 300Kbps data rate and 128-bit AES encryption/decryption with hardware acceleration.

Block Diagram

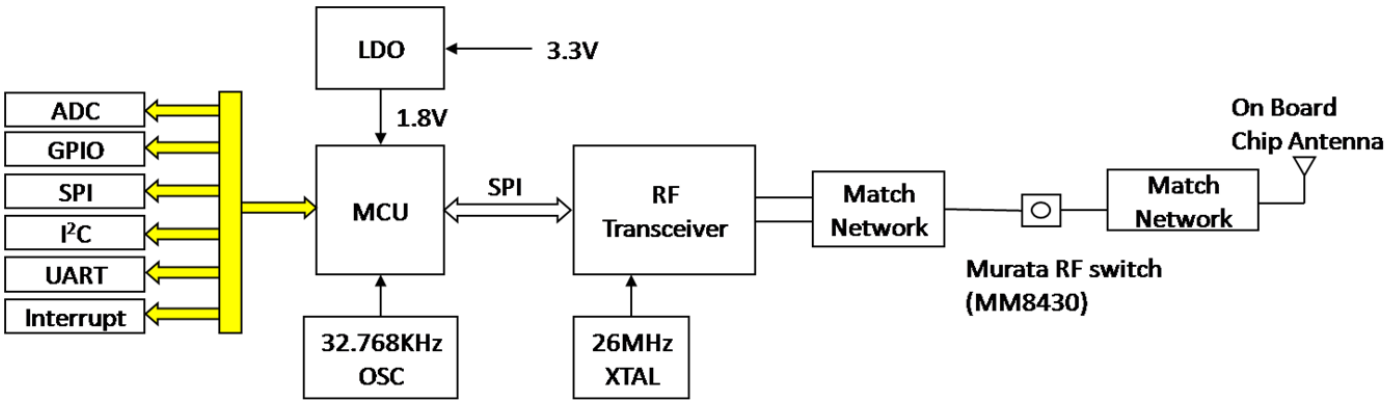

Figure 3. ODE3528 module block diagram

Antenna Path

Each module provide three way for RF connectivity,

- **On board chip antenna:** Unictron AA702.
- **Murata RF switch** (MM8430) **:** For RF test and external antenna with MXHS83QE3000.

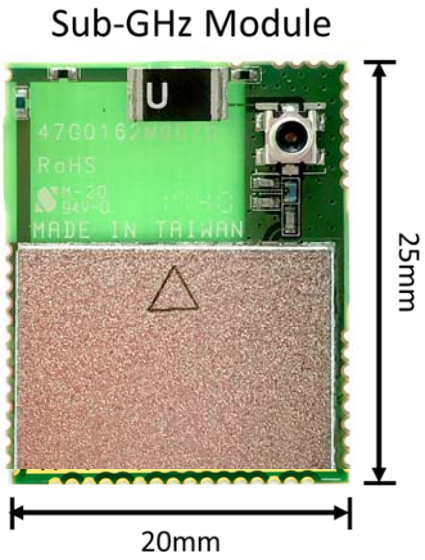

Figure 4. Module Overview

Answer Technology Confidential Information – Not for External Distribution
© Answer Technology Co., Ltd. 2016, all rights reserved

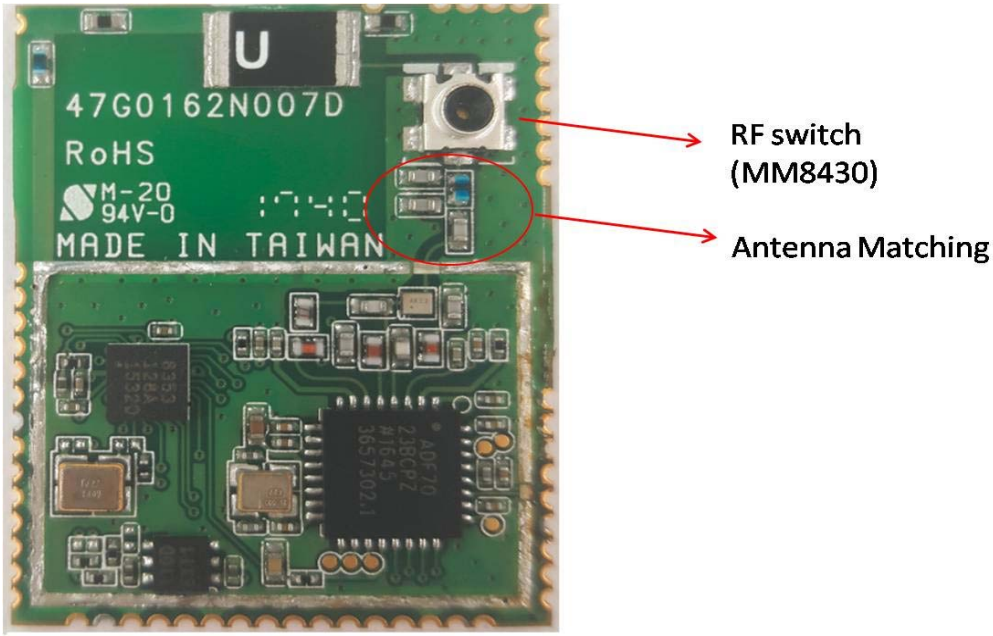

Figure 5. ODE3528-915/920MHz RF switch and antenna matching

Answer Technology Confidential Information
© Answer Technology Co., Ltd. 2016, all rights reserved

Carrier Board

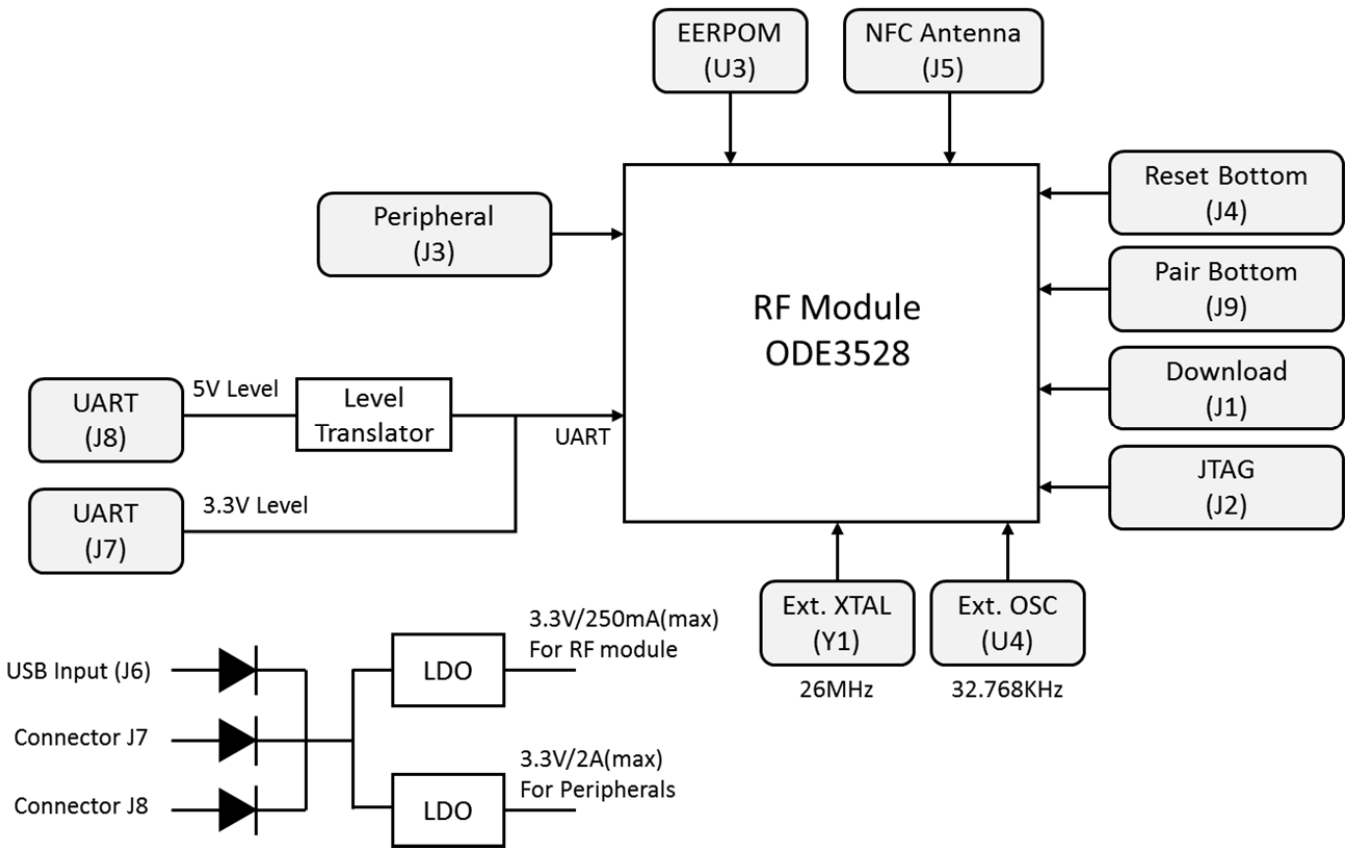

Answer Technology Confidential Information – Not for External Distribution
© Answer Technology Co., Ltd. 2016, all rights reserved

COMMUNICATION MODE

Transparent Mode: UART over 802.15.4

UART over 802.15.4 mode which easy to use as wireless UART communication.

The firmware files is available of "ite_mode1_sdk_868Mhz.bin (support 868Mhz)". Please contact Answer Technology Inc. for detail.

After finished firmware upload, please connect the UART interface into PC COM port or use a USB to UART dongle as virtual COM port and plug into computer.

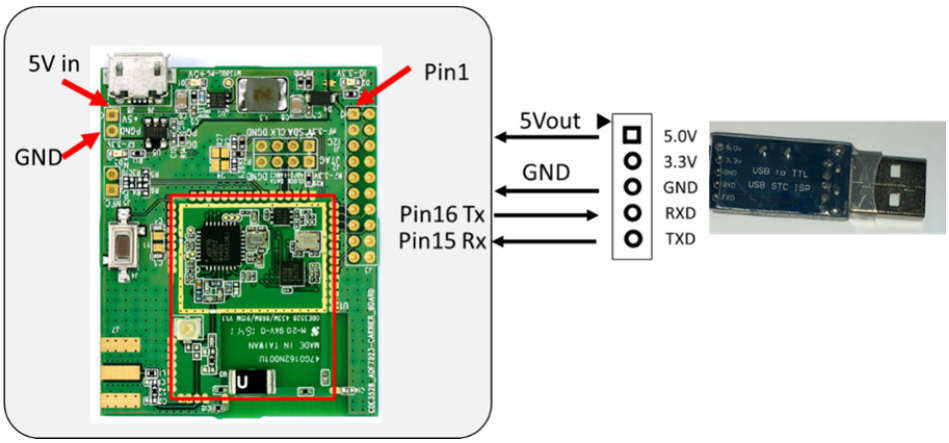

Figure 6. ODE3528 as UART connection

Please execution two hyper terminal windows and configuration UART parameters of each as below:

Baud Rate: 115,200bps

Flow Control: None

Data Bits: 8

Stop Bit=1

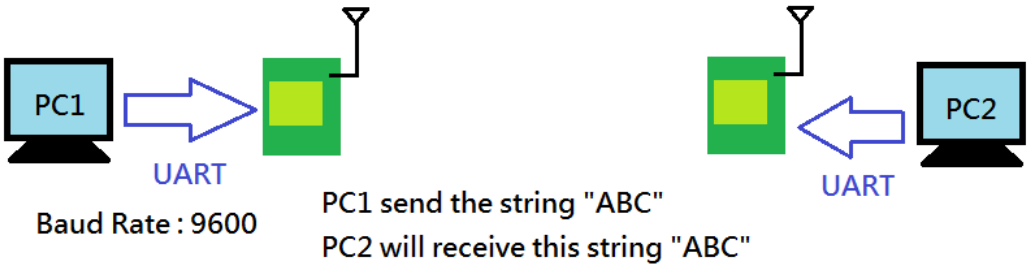

Figure 7. UART Communication System Setup

MODE 2: Contiki OS Mode

Under development.

MODE 3: AT Comment + SDK

Under development.

Answer Technology Confidential Information
© Answer Technology Co., Ltd. 2016, all rights reserved

AT Comment List

Function	Main Code	Sub Code	Access	Action
System	ATSS	B[1]	R	Border Router response OK
		N	R	Sensor Node response OK
		H	R	Host response OK
	ATST[1]	C	W	Set up UDP connection
		U	R/W	UPD data transaction

[1]Function reserved.

Function	Main Code	Sub Code	Access	Action
Border Router	ATBI	V	R	Firmware version
		M	R	802.15.4 MAC Address
		I	R	IPv6 address
	ATBC	T	R/W	RTC
		S[1]	R/W	Security Key
		R	R/W	RF channel
		P	R/W	Pan ID
	ATBN	L	R	List all sensor node IPv6 address
		A	W	Add a Sensor node
		D	W	Delete a Sensor node
		M[1]	W	Move a Sensor node
	ATBU	R	W	Reset
		G[1]	W	Firmware upgrade

[1]Function reserved.

Function	Main Code	Sub Code	Access	Action
Sensor Node	ATEI	V	R	Firmware version
		M	R	802.15.4 MAC Address
		I	R	IPv6 address
		B[1]	R	Report to border router address
	ATEC	T	R/W	RTC
		S[1]	R/W	Security key
		R	R/W	RF channel
		P	R/W	Pan ID
		A	R/W	Attribute (Acc, hyg, temp, pres)
	ATEN	F[1]	R/W	Report sensor data FIFO size (batch mode)
		I	R/W	Report interval (to border router)
	ATES	I	R/W	Get sensor data interval
		C[1]	R/W	Calibration data
	ATEU	R	W	Reset
		S	R/W	Sleep period
		W	R/W	Wake up time period
		G[1]	W	Firmware upgrade

[1]Function reserved.

Answer Technology Confidential Information – Not for External Distribution
© Answer Technology Co., Ltd. 2016, all rights reserved

Function	Main Code	Sub Code	Access	Action
Host	ATHI	V	R	WIFI firmware version
		M	R	MAC address
		I	R	IPv4 address
	ATHS	N	R/W	NTP server IPv4 address
		C	R/W	Cloud server IPv4 address
	ATHC	C	R/W	Wi-Fi connect/disconnect
		M[1]	R/W	Switch mode(STA)
		S	R/W	STA SSIS/password /channel/encryption
	ATHN	P	W	Put sensor data to cloud server
		C	R/W	Sensor node configuration <--> cloud server
		N	R/W	Sensor node configuration <--> sensor node
	ATHU	R	W	Reset
		G[1]	W	Firmware upgrade

[1]Function reserved.

Answer Technology Confidential Information
© Answer Technology Co., Ltd. 2016, all rights reserved

DESIGN AND LAYOUT CONSIDERATION

Combined Differential PA/LNA Match

SUB-GHz RF Module

In this matching topology, the single-ended PA is not used. The differential PA and LNA match comprises a five-element discrete balun giving a single-ended input/output as illustrated in Figure 8. The harmonic filter is used to minimize the RF harmonics from the differential PA.

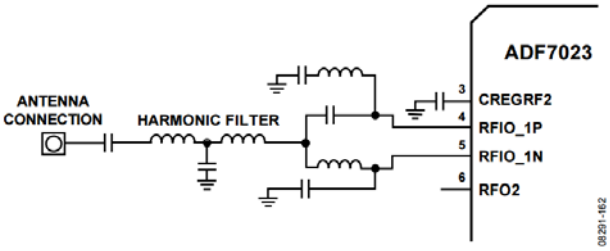

Figure 8. Combined Differential PA and LNA Match for Sub-G Module

ADIsimSRD Design Studio, the design and optimization of short-range wireless systems is a complex task due to the diverse range of interdependent parameters to be set. The range of subsystems to be considered in the development process include the PLL, RF filtering/matching, modulation type and demodulation process, packet data formatting, and average power consumption. Until now, system designers relied on a combination of spreadsheet-based tools and iterative lab work to help with the optimization of these parameters.

Analog Devices ADIsimSRD Design Studio is a very powerful tool allowing real-time simulation and optimization of many of the parameters in a typical wireless system using the ADF7xxx family of transceivers and transmitters. The development tool is based on the popular ADIsimPLL™ tool, and has been enhanced to allow users to view modulation in both the time and frequency domains. Furthermore, the ADIsimSRD Design Studio greatly simplifies the overall development process by creating a path along which a user can be guided and breaking down the design workflow into a number of distinct tasks.

http://www.analog.com/en/design-center/landing-pages/001/adisimsrd-design-studio.html

Answer Technology Confidential Information – Not for External Distribution
© Answer Technology Co., Ltd. 2016, all rights reserved

Ground Plant Configuration

Copper and Components Free Area Consideration

The areas closest to the antenna, marked by the diagonal pattern, are sensitive to the presence of any conducting body. Violating this clearance might result in antenna detuning or loss of radiation efficiency.

For Sub-G module uses Unictron AA702 chip antenna, which recommended keep out region area as below dimension (10mm x 10mm). Please make sure whole copper and components does not in keep out area on all layers.

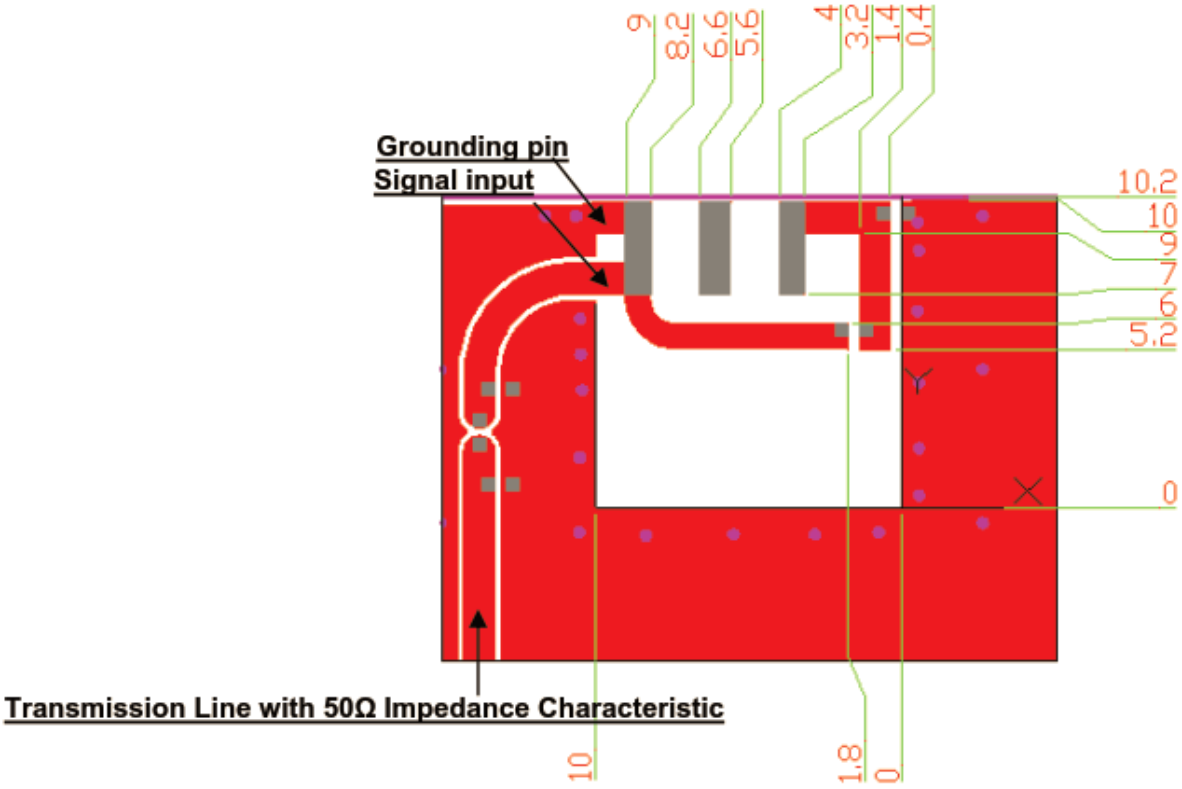

Figure 9. AA702 Keepout Region Area

Answer Technology Confidential Information
© Answer Technology Co., Ltd. 2016, all rights reserved

Module Name Rule

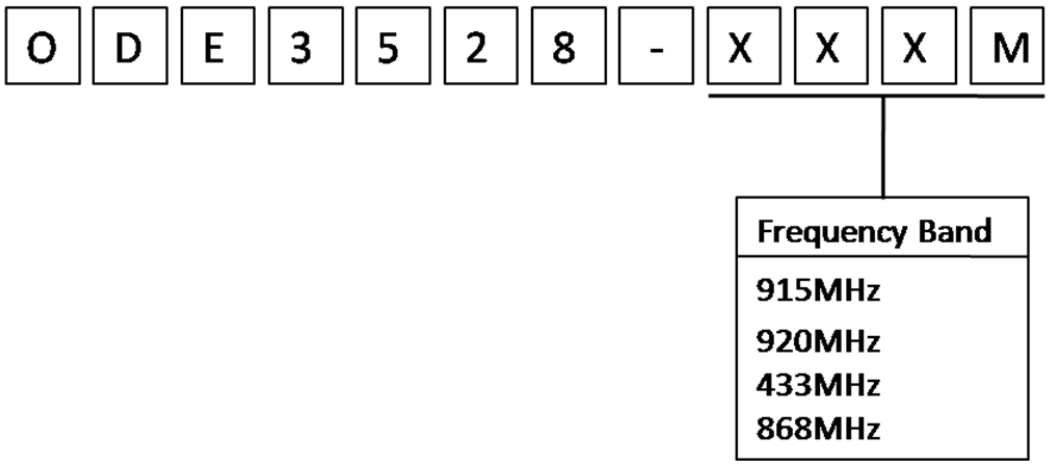

IMPORTANAT NOTES

Federal Communication Commission Interference Statement:

This equipment has been tested and found to comply with the limits for a Class B digital device, pursuant to Part 15 of the FCC Rules. These limits are designed to provide reasonable protection against harmful interference in a residential installation. This equipment generates, uses and can radiate radio frequency energy and, if not installed and used in accordance with the instructions, may cause harmful interference to radio communications. However, there is no guarantee that interference will not occur in a particular installation. If this equipment does cause harmful interference to radio or television reception, which can be determined by turning the equipment off and on, the user is encouraged to try to correct the interference by one or more of the following measures:

- Reorient or relocate the receiving antenna.
- Increase the separation between the equipment and receiver.
- Connect the equipment into an outlet on a circuit different from that to which the receiver is connected.
- Consult the dealer or an experienced radio/TV technician for help.

FCC Caution: Any changes or modifications not expressly approved by the party responsible for compliance could void the user's authority to operate this equipment.

Answer Technology Confidential Information – Not for External Distribution
© Answer Technology Co., Ltd. 2016, all rights reserved

This device complies with Part 15 of the FCC Rules. Operation is subject to the following two conditions: (1) This device may not cause harmful interference, and (2) this device must accept any interference received, including interference that may cause undesired operation.

This device and its antenna(s) must not be co-located or operating in conjunction with any other antenna or transmitter.

FCC Radiation Exposure Statement:

This equipment complies with FCC radiation exposure limits set forth for an uncontrolled environment. This equipment should be installed and operated with minimum distance 20cm between the radiator & your body.

The module is limited to OEM installation ONLY.

This module is intended for OEM integrators under the following conditions:

1. This module is restricted to installation in products for use only in mobile and fixed applications.
2. The antenna(s) used for this transmitter must be installed to provide a separation distance of at least 20 cm from all persons.
3. The antenna(s) used for this transmitter must not transmit simultaneously with any other antenna or transmitter.

The OEM integrator is still responsible for

1. Ensuring that the end-user has no manual instructions to remove or install module
2. The FCC compliance requirement of the end product, which integrates this module.
3. Appropriate measurements(e.g. 15 B compliance) and if applicable additional equipment authorizations (e.g. Verification, Doc) of the host device to be addressed by the integrator/manufacturer.
4. The separate approval is required for all other operating configurations, including portable configurations with respect to Part 2.1093 and different antenna configurations

Guidance to the Host Manufacturer:

1. We hereby acknowledge our responsibility to provide guidance to the host manufacturer in the event that they require assistance for ensuring compliance with the Part 15 Subpart B requirements.
2. The host manufacturer is responsible for additional testing to verify compliance as a composite system. When testing the host device for compliance with the Part 15 Subpart B requirements, the host manufacturer is required to show compliance with the Part 15 Subpart B while the transmitter module(s) are installed and operating. The modules should be transmitting and the evaluation should confirm that the module's intentional emissions are compliant (i.e. fundamental and out of band emissions) with the Radio essential requirements. The host manufacturer must verify that there are no additional unintentional emissions other than what is permitted in the Part 15 Subpart B or emissions are complaint with the Radio aspects.

Answer Technology Confidential Information
© Answer Technology Co., Ltd. 2016, all rights reserved

3. Any changes or modifications not expressly approved by the party responsible for compliance could void the user's authority to operate this equipment.
4. This device and its antenna(s) must not be co-located or operating in conjunction with any other antenna or transmitter.
5. This equipment should be installed and operated with minimum distance 20cm between the radiator & your body.
6. The FCC part 15.19 statement: This device complies with part 15 of the FCC Rules. Operation is subject to the following two conditions: (1) This device may not cause harmful interference, and (2) this device must accept any interference received, including interference that may cause undesired operation.
7. The final end product must be labeled in a visible area with the following " Contains TX FCC ID: 2ANZTODE3528".
8. The end product shall bear the following 15.19 statement: This device complies with part 15 of the FCC Rules. Operation is subject to the following two conditions: (1) This device may not cause harmful interference, and (2) this device must accept any interference received, including interference that may cause undesired operation.

Answer Technology Confidential Information – Not for External Distribution
© Answer Technology Co., Ltd. 2016, all rights reserved

Labeling instructions:

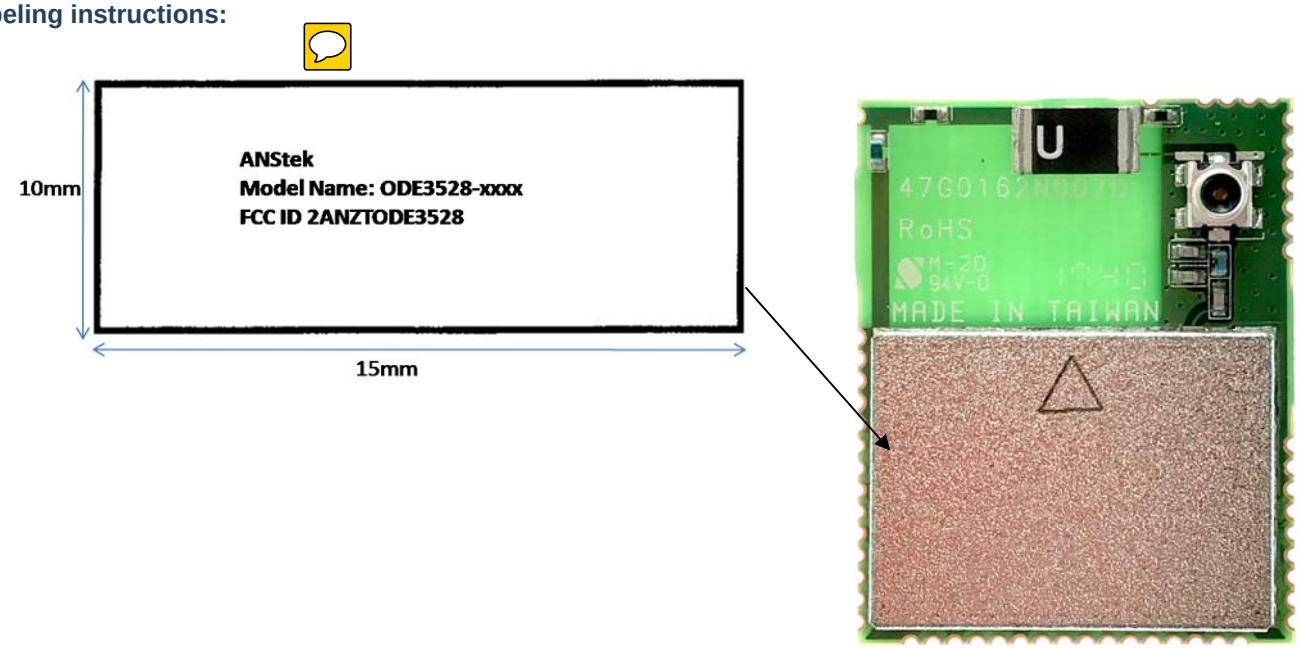

Answer Technology Confidential Information
© Answer Technology Co., Ltd. 2016, all rights reserved