EMTEK
Access to the World

FCC 47 CFR PART 15 SUBPART E

DFS TEST REPORT

For

OTT Dongle

MODEL No.: D2000

FCC ID: 2AO2A-S905X216

Trade Mark: inspur

REPORT NO.: ES180131012W05

ISSUE DATE: March 06, 2018

Prepared for

Inspur Software Group Ltd.
No. 2877 Kehang Rd., Jinan, Shandong, 250104 China

Prepared by

EMTEK(SHENZHEN) CO., LTD.

Bldg 69, Majialong Industry Zone, Nanshan District,
Shenzhen, Guangdong, China
TEL: 86-755-26954280
FAX: 86-755-26954282

TABLE OF CONTENTS

1. TEST RESULT CERTIFICATION 3

2. EUT DESCRIPTION 3

3. SUMMARY OF TEST RESULT 6

4. TEST METHODOLOGY 7

4.1 GENERAL DESCRIPTION OF APPLIED STANDARDS 7
4.2 MEASUREMENT EQUIPMENT USED 7
4.3 DESCRIPTION OF TEST MODES 7

5. FACILITIES AND ACCREDITATIONS 10

5.1 FACILITIES 10
5.2 EQUIPMENT 10
5.3 LABORATORY ACCREDITATIONS AND LISTINGS 10

6. SETUP OF EQUIPMENT UNDER TEST 11

6.1 SETUP CONFIGURATION OF EUT 11
6.2 CALIBRATION OF DFS DETECTION THRESHOLD LEVEL: 11
6.3 SUPPORT EQUIPMENT 12

7. DYNAMIC FREQUENCY SELECTION REQUIREMENTS 13

7.1 APPLICABLE STANDARD 13
7.2 CONFORMANCE LIMIT 13
7.3 TEST CONFIGURATION 13
7.4 TEST PARAMETERS OF DFS TEST SIGNAL 14
7.5 TRANSMITTER OUTPUT POWER 15
7.6 OPERATION MODES AND REQUIREMENT TEST ITEMS 16
7.7 TEST PROCEDURE 16

8. TEST RESULT 17

8.1 DETAILED TEST RESULTS 17
8.2 RADAR WAVEFORM 18
8.3 IN-SERVICE MONITORING 21

1. TEST RESULT CERTIFICATION

Applicant:	Inspur Software Group Ltd. No. 2877 Kehang Rd., Jinan, Shandong, 250104 China
Manufacturer:	Inspur Software Group Ltd. No. 2877 Kehang Rd., Jinan, Shandong, 250104 China
Product Description:	OTT Dongle
Model Number:	D2000
Trade Mark:	inspur
File Number:	ES180131012W05

Measurement Procedure Used:

APPLICABLE STANDARDS	
STANDARD	**TEST RESULT**
FCC 06-96 FCC 47 CFR Part 15, Subpart E	PASS

The above equipment was tested by EMTEK(SHENZHEN) CO., LTD.. The test data, data evaluation, test procedures, and equipment configurations shown in this report were made in accordance with the procedures given in ANSI C63.10 (2013) and the energy emitted by the sample EUT tested as described in this report is in compliance with the requirements of FCC Rules Part 2 and Part 15.407.

The test results of this report relate only to the tested sample identified in this report.

Date of Test : January 31, 2018 to March 06, 2018

Prepared by: Yaping Shen/Editor

Reviewer: Sevin Li /Supervisor

Approve & Authorized Signer : Lisa Wang/Manager

2. EUT DESCRIPTION

Characteristics	Description			
IEEE 802.11 WLAN Mode Supported	☒802.11a(20MHz channel bandwidth) ☒802.11n(20MHz channel bandwidth) ☒802.11n(40MHz channel bandwidth) ☒802.11ac(20MHz channel bandwidth) ☒802.11ac(40MHz channel bandwidth) ☒802.11ac(80MHz channel bandwidth)			
Data Rate	802.11a:6,9,12,18,24,36,48,54Mbps; 802.11n(HT20)/ac(HT20): MCS0-MCS7; 802.11n(HT40): MCS0-MCS7; 802.11ac(HT40):MCS0-MCS9; 802.11ac(VHT80):MCS0-MCS9;			
Modulation	OFDM with BPSK/QPSK/16QAM/64QAM for 802.11a/n; OFDM with BPSK/QPSK/16QAM/64QAM/256QAM for 802.11ac;			
Operating Frequency Range	WIFI 5G Band	Mode	Frequency Range(MHz)	Number of channels
	UNII Band I	802.11a/n(HT20)/ac(VHT20)	5180-5240	4
		802.11n(HT40)/ac(VHT40)	5190-5230	2
		802.11 ac(VHT80)	5210	1
	UNII Band II-A	802.11a/n(HT20)/ac(VHT20)	5260-5320	4
		802.11n(HT40)/ac(VHT40)	5270-5310	2
		802.11 ac(VHT80)	5290	1
	UNII Band II-C	802.11a/n(HT20)/ac(VHT20)	5500-5700	11
		802.11n(HT40)/ac(VHT40)	5510-5670	5
		802.11 ac(VHT80)	5530-5610	2
	UNII Band III	802.11a/n(HT20)/ac(VHT20)	5745-5825	5
		802.11n(HT40)/ac(VHT40)	5755-5795	2
		802.11 ac(VHT80)	5775	1
Transmit Power Max	19.63 dBm for UNII Band I 19.24 dBm for UNII Band II-A 18.99 dBm for UNII Band II-C 19.16 dBm for UNII Band III			
Antenna Type	Antenna 1: Metal antenna Antenna 2:Metal antenna			
Smart system	☒SISO ☒MIMO			
Antenna Gain	4.5 dBi			
Direction Gain	7.51 dBi			
Power supply	☐DC 3.7V internal rechargeable lithium battery			

	☒DC 5V from Adapter
	☒Adapter: Model: EJVD+100050-2000 Input: AC 100-240V 50/60Hz 0.3A Output: DC 5V 2A

Note: *for more details, please refer to the User's manual of the EUT.*

3. SUMMARY OF TEST RESULT

FCC Part Clause	Test Parameter	Verdict	Remark
15.407 (h) (i) (j)	Dynamic Frequency Selection	PASS	

NOTE1: N/A (Not Applicable)
NOTE2: According to FCC OET KDB 905462 D02 UNII DFS Compliance Procedures New Rules v02, In addition, the radiated test is also performed to ensure the emissions emanating from the device cabinet also comply with the applicable limits.

4. TEST METHODOLOGY

4.1 GENERAL DESCRIPTION OF APPLIED STANDARDS

According to its specifications, the EUT must comply with the requirements of the following standards:
FCC 06-96
FCC 47 CFR Part 15, Subpart E
FCC KDB 905462 D02 UNII DFS Compliance Procedures New Rules v02

4.2 MEASUREMENT EQUIPMENT USED

EQUIPMENT TYPE	MFR	MODEL NUMBER	SERIAL NUMBER	LAST CAL.	Due Cal.
Vector Signal Generater	Agilent	N5182B	My53050553	05/20/2017	05/19/2018
Analog Signal Generator	Agilent	N5171B	My53050878	05/20/2017	05/19/2018
Signal Analyzer	Agilent	N9010A	My53470879	05/20/2017	05/19/2018
Power Analyzer	Agilent	PS-X10-100	N/A	05/20/2017	05/19/2018
Test Accessories	Agilent	PS-X10-100	N/A	05/20/2017	05/19/2018

Remark: *Each piece of equipment is scheduled for calibration once a year.*

4.3 DESCRIPTION OF TEST MODES

The EUT has been tested under its typical operating condition.
The EUT configuration for testing is installed on RF field strength measurement to meet the Commissions requirement and operating in a manner which intends to maximize its emission characteristics in a continuous normal application.

The Transmitter was operated in the normal operating mode. The TX frequency was fixed which was for the purpose of the measurements.

Test of channel included the lowest and middle and highest frequency to perform the test, then record on this report.

Those data rates (☒802.11a: 6 Mbps; ☒802.11n (HT20): MCS0; ☒802.11n (HT20): MCS7; ☒802.11n (HT40): MCS0; ☒802.11n (HT40): MCS7; ☒802.11ac (HT20): MCS0; ☒802.11ac (HT20): MCS7; ☒ 802.11ac (HT40): MCS0; ☒802.11ac (HT40): MCS7; ☒802.11ac (HT80): MCS0; ☒802.11ac (HT80): MCS7;) were used for all test.

Pre-defined engineering program for regulatory testing used to control the EUT for staying in continuous transmitting and receiving mode is programmed.

☒Wifi 5G with UNII Band II-A

Frequency and Channel list for 802.11a/n(HT20)/ac(VHT20):

Channel	Frequency (MHz)	Channel	Frequency (MHz)	Channel	Frequency (MHz)
52	5260	60	5300		
56	5280	64	5320		

Frequency and Channel list for 802.11n(VHT40)/ac(VHT40):

Channel	Frequency (MHz)	Channel	Frequency (MHz)	Channel	Frequency (MHz)
54	5270				
62	5310				

Frequency and Channel list for 802.11ac(VHT80):

Channel	Frequency (MHz)	Channel	Frequency (MHz)	Channel	Frequency (MHz)
58	5290				

Test Frequency and Channel for 802.11a/n(HT20)/ac(VHT20):

Lowest Frequency		Middle Frequency		Highest Frequency	
Channel	Frequency (MHz)	Channel	Frequency (MHz)	Channel	Frequency (MHz)
52	5260	56	5280	64	5320

Test Frequency and channel for 802.11n(HT40)/ac(VHT40):

Lowest Frequency		Middle Frequency		Highest Frequency	
Channel	Frequency (MHz)	Channel	Frequency (MHz)	Channel	Frequency (MHz)
54	5270	N/A	N/A	62	5310

Test Frequency and channel for 802.11ac(VHT80):

Lowest Frequency		Middle Frequency		Highest Frequency	
Channel	Frequency (MHz)	Channel	Frequency (MHz)	Channel	Frequency (MHz)
58	5290	N/A	N/A	N/A	N/A

☒Wifi 5G with UNII Band II-C

Frequency and Channel list for 802.11a/n(HT20)/ac(VHT20):

Channel	Frequency (MHz)	Channel	Frequency (MHz)	Channel	Frequency (MHz)
100	5500	116	5580	132	5660
104	5520	120	5600	136	5680
108	5540	124	5620	140	5700
112	5560	128	5640		

Frequency and Channel list for 802.11n(VHT40)/ac(VHT40):

Channel	Frequency (MHz)	Channel	Frequency (MHz)	Channel	Frequency (MHz)
102	5510	126	5630		
110	5550	134	5670		
118	5590				

Frequency and Channel list for 802.11ac(VHT80):

Channel	Frequency (MHz)	Channel	Frequency (MHz)	Channel	Frequency (MHz)
106	5530				
122	5610				

Test Frequency and Channel for 802.11a/n(HT20)/ac(VHT20):

Lowest Frequency		Middle Frequency		Highest Frequency	
Channel	Frequency (MHz)	Channel	Frequency (MHz)	Channel	Frequency (MHz)
100	5500	120	5600	140	5700

Test Frequency and channel for 802.11n(VHT40)/ac(VHT40):

Lowest Frequency		Middle Frequency		Highest Frequency	
Channel	Frequency (MHz)	Channel	Frequency (MHz)	Channel	Frequency (MHz)
102	5510	118	5590	134	5670

Test Frequency and channel for 802.11ac(VHT80):

Lowest Frequency		Middle Frequency		Highest Frequency	
Channel	Frequency (MHz)	Channel	Frequency (MHz)	Channel	Frequency (MHz)
106	5530	N/A	N/A	122	5610

5. FACILITIES AND ACCREDITATIONS

5.1 FACILITIES

All measurement facilities used to collect the measurement data are located at

Bldg 69, Majialong Industry Zone District, Nanshan District, Shenzhen, China
The sites are constructed in conformance with the requirements of ANSI C63.7, ANSI C63.4 and CISPR Publication 22.

5.2 EQUIPMENT

Radiated emissions are measured with one or more of the following types of linearly polarized antennas: tuned dipole, biconical, log periodic, bi-log, and/or ridged waveguide, horn. Spectrum analyzers with preselectors and quasi-peak detectors are used to perform radiated measurements.

Conducted emissions are measured with Line Impedance Stabilization Networks and EMI Test Receivers.

Calibrated wideband preamplifiers, coaxial cables, and coaxial attenuators are also used for making measurements.

All receiving equipment conforms to CISPR Publication 16-1, “Radio Interference Measuring Apparatus and Measurement Methods.”

5.3 LABORATORY ACCREDITATIONS AND LISTINGS

Site Description		
EMC Lab.	:	Accredited by CNAS, 2016.10.24 The certificate is valid until 2022.10.28 The Laboratory has been assessed and proved to be in compliance with CNAS-CL01:2006 (identical to ISO/IEC 17025:2005) The Certificate Registration Number is L2291. Accredited by TUV Rheinland Shenzhen 2015.4 The Laboratory has been assessed according to the requirements ISO/IEC 17025. Accredited by FCC, August 03, 2017 Designation Number: CN1204 Test Firm Registration Number: 882943 Accredited by A2LA, July 31, 2017 The Certificate Registration Number is 4321.01. Accredited by Industry Canada, November 29, 2012 The Certificate Registration Number is 4480A.
Name of Firm	:	EMTEK(SHENZHEN) CO., LTD..
Site Location	:	Bldg 69, Majialong Industry Zone, Nanshan District, Shenzhen, Guangdong, China

6. SETUP OF EQUIPMENT UNDER TEST

6.1 SETUP CONFIGURATION OF EUT

Master Modes

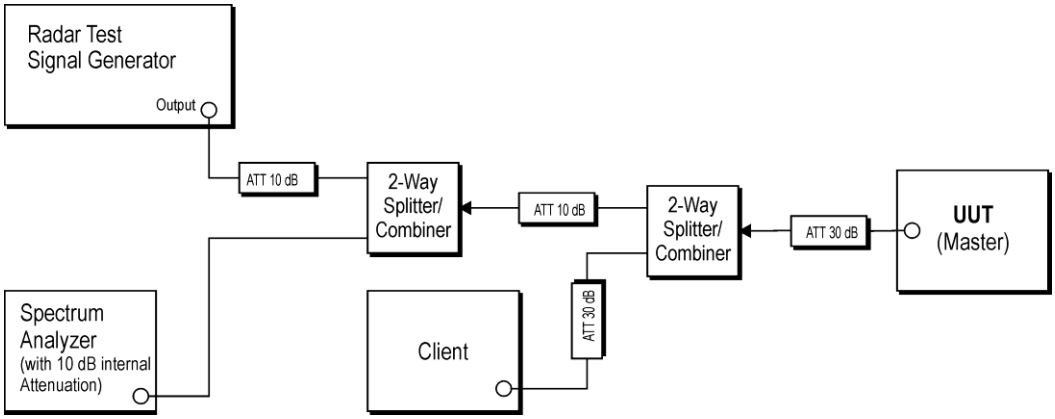

Slave Mode

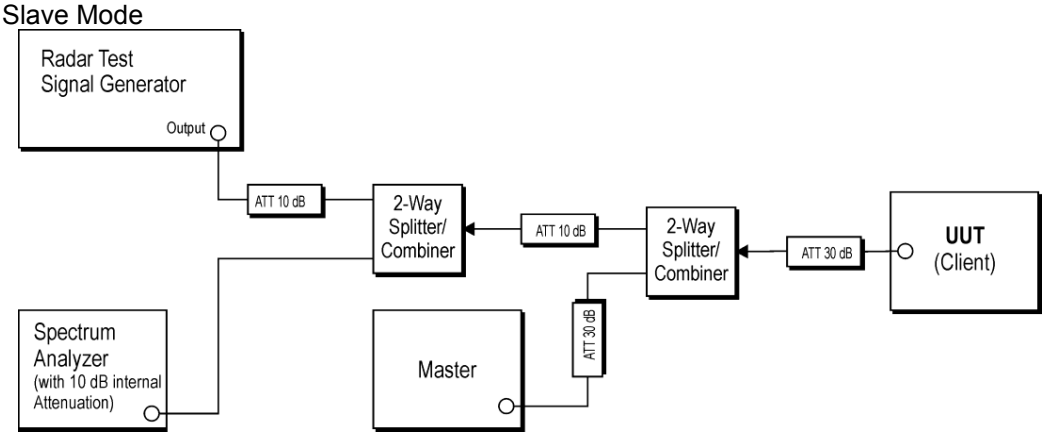

6.2 CALIBRATION OF DFS DETECTION THRESHOLD LEVEL:

A 50 ohm load is connected in place of the spectrum analyzer, and the spectrum analyzer is connected in place of the master device and the signal generator is set to CW mode. The amplitude of the signal generator is adjusted to yield a level of –62 dBm as measured on the spectrum analyzer.
Without changing any of the instrument settings, the spectrum analyzer is reconnected to the Common port of the Spectrum Analyzer Combiner/Divider. Measure the amplitude and calculate the difference from –62 dBm. Adjust the Reference Level Offset of the spectrum analyzer to this difference.
The spectrum analyzer displays the level of the signal generator as received at the antenna ports of the Master Device. The interference detection threshold may be varied from the calibrated value of –62 dBm and the spectrum analyzer will still indicate the level as received by the Master Device.
Set the signal generator to produce a radar waveform, trigger a burst manually and measure the level on the spectrum analyzer. Readjust the amplitude of the signal generator as required so that the peak level of the waveform is at a displayed level equal to the required or desired interference detection threshold.
Separate signal generator amplitude settings are determined as required for each radar type.

6.3 SUPPORT EQUIPMENT

Item	Equipment	Mfr/Brand	Model/Type No.	Series No.	Note
1.	Wireless Access Point	Cisco	AIR-CAP3702E-A-K9	FTX182276QD	N/A

Notes:

1. *All the equipment/cables were placed in the worst-case configuration to maximize the emission during the test.*
2. *Grounding was established in accordance with the manufacturer's requirements and conditions for the intended use.*

7. DYNAMIC FREQUENCY SELECTION REQUIREMENTS

7.1 APPLICABLE STANDARD

According to 15.407

7.2 CONFORMANCE LIMIT

The dynamic frequency selection requirement

Parameter	Value
Non-occupancy period	Minimum 30 minutes
Channel Availability Check Time	60 seconds
Channel Move Time	10 seconds See Note 1.
Channel Closing Transmission Time	200 milliseconds + an aggregate of 60 milliseconds over remaining 10 second period. See Notes 1 and 2.
U-NII Detection Bandwidth	Minimum 100% of the U-NII 99% transmission power bandwidth. See Note 3.
Note 1: *Channel Move Time* and the *Channel Closing Transmission Time* should be performed with Radar Type 0. The measurement timing begins at the end of the Radar Type 0 burst. **Note 2:** The *Channel Closing Transmission Time* is comprised of 200 milliseconds starting at the beginning of the *Channel Move Time* plus any additional intermittent control signals required to facilitate a *Channel* move (an aggregate of 60 milliseconds) during the remainder of the 10 second period. The aggregate duration of control signals will not count quiet periods in between transmissions. **Note 3:** During the *U-NII Detection Bandwidth* detection test, radar type 0 should be used. For each frequency step the minimum percentage of detection is 90 percent. Measurements are performed with no data traffic.	

The following table lists the DFS The detection threshold values

Maximum Transmit Power	Value (See Notes 1, 2, and 3)
EIRP ≥ 200 milliwatt	-64 dBm
EIRP < 200 milliwatt and power spectral density < 10 dBm/MHz	-62 dBm
EIRP < 200 milliwatt that do not meet the power spectral density requirement	-64 dBm
Note 1: This is the level at the input of the receiver assuming a 0 dBi receive antenna. **Note 2:** Throughout these test procedures an additional 1 dB has been added to the amplitude of the test transmission waveforms to account for variations in measurement equipment. This will ensure that the test signal is at or above the detection threshold level to trigger a DFS response. **Note3:** EIRP is based on the highest antenna gain. For MIMO devices refer to KDB Publication 662911 D01.	

7.3 TEST CONFIGURATION

Conducted measurements shall be used for DFS test

7.4 TEST PARAMETERS OF DFS TEST SIGNAL

The following table lists the parameters of radar test signals

Short Pulse Radar Test Waveforms

Radar Type	Pulse Width (µsec)	PRI (µsec)	Number of Pulses	Minimum Percentage of Successful Detection	Minimum Number of Trials
0	1	1428	18	See Note 1	See Note 1
1	1	Test A: 15 unique PRI values randomly selected from the list of 23 PRI values in Table 5a	$\text{Roundup}\left\{\left(\frac{1}{360}\right)\cdot\left(\frac{19\cdot 10^6}{\text{PRI}_{\mu\text{sec}}}\right)\right\}$	60%	30
		Test B: 15 unique PRI values randomly selected within the range of 518-3066 µsec, with a minimum increment of 1 µsec, excluding PRI values selected in Test A			
2	1-5	150-230	23-29	60%	30
3	6-10	200-500	16-18	60%	30
4	11-20	200-500	12-16	60%	30
Aggregate (Radar Types 1-4)				80%	120
Note 1: Short Pulse Radar Type 0 should be used for the detection bandwidth test, channel move time, and channel closing time tests.					

Long Pulse Radar Test Waveform

Radar Type	**Pulse Width (µsec)**	**Chirp Width (MHz)**	**PRI (µsec)**	**Number of Pulses per *Burst***	**Number of *Bursts***	**Minimum Percentage of Successful Detection**	**Minimum Number of Trials**
5	50-100	5-20	1000-2000	1-3	8-20	80%	30

Frequency Hopping Radar Test Waveform

Radar Type	**Pulse Width (µsec)**	**PRI (µsec)**	**Pulses per Hop**	**Hopping Rate (kHz)**	**Hopping Sequence Length (msec)**	**Minimum Percentage of Successful Detection**	**Minimum Number of Trials**
6	1	333	9	0.333	300	70%	30

7.5 TRANSMITTER OUTPUT POWER

Temperature: 25°C **Test Date:** February 06, 2018

Humidity: 55 % RH

Mode	Band	Max Power	
		Conducted Outpot Power	E.I.R.P
802.11ac(VHT20)	5250MHz-5350MHz	19.24dBm(82.79mW)	26.75dBm(473.15mW)
	5470MHz-5725MHz	18.99dBm (79.25mW)	26.50dBm(446.68mW)

7.6 OPERATION MODES AND REQUIREMENT TEST ITEMS

The manufacture shall state whether the EUT is capable of operating as a Master or a Slave modes,if the EUT is capable of operating in more than one operational mode then every operating mode shall be assessed separately.

Applicability of DFS Requirements Prior to Use of a Channel

Requirement	**Operational Mode**		
	Master	**Client Without Radar Detection**	**Client With Radar Detection**
Non-Occupancy Period	Yes	Not required	Yes
DFS Detection Threshold	Yes	Not required	Yes
Channel Availability Check Time	Yes	Not required	Not required
Uniform Spreading	Yes	Not required	Not required
U-NII Detection Bandwidth	Yes	Not required	Yes

Applicability of DFS requirements during normal operation

Requirement	**Operational Mode**		
	Master	**Client Without Radar Detection**	**Client With Radar Detection**
DFS Detection Threshold	Yes	Not required	Yes
Channel Closing Transmission Time	Yes	Yes	Yes
Channel Move Time	Yes	Yes	Yes
U-NII Detection Bandwidth	Yes	Not required	Yes

7.7 TEST PROCEDURE

According to KDB 905462 D02v02 Section 7.

8. TEST RESULT

8.1 DETAILED TEST RESULTS

Clause	MODES	Test Parameter	Remark	Verdict
15.407	☐Master	DFS Detection Threshold	N/A	N/A
15.407		Channel Availability Check Time	N/A	N/A
15.407		Channel Move Time	N/A	N/A
15.407		Channel Closing Transmission Time	N/A	N/A
15.407		Non-Occupancy Period	N/A	N/A
15.407		Uniform Spreading	N/A	N/A
15.407		U-NII Detection Bandwidth	N/A	N/A
15.407	☒Slave	Radar Detection Threshold	N/A	N/A
15.407		Channel Move Time	Applicable	PASS
15.407		Channel Closing Transmission Time	Applicable	PASS
15.407		Non-Occupancy Period	N/A	N/A
15.407		U-NII Detection Bandwidth	N/A	N/A

8.2 RADAR WAVEFORM

Calibration:

Note: Maximum Transmit Power is more than 200 milliwatt, so detection threshold level is -64dBm.

The 801.11a/n/ac have been tested, and the worst result have been recorded in the below page.

Radar Waveform	
☐Master Mode	☒Slave Mode

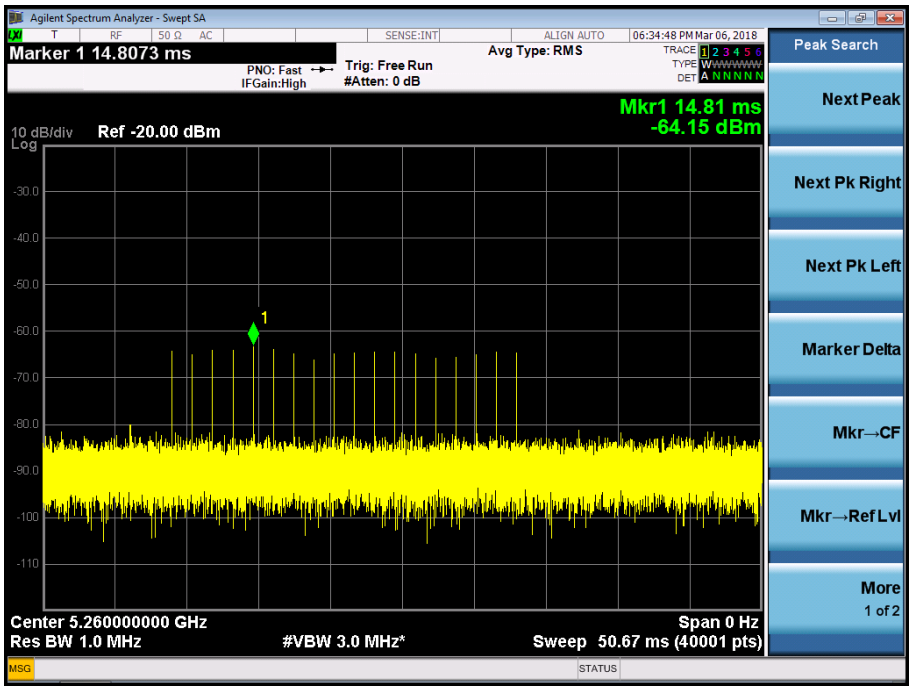

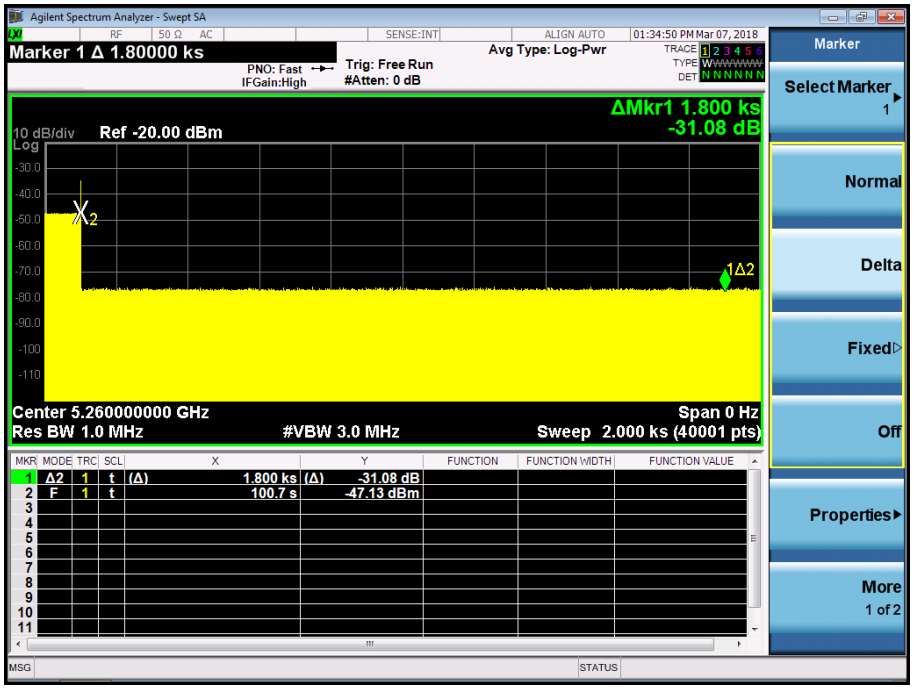

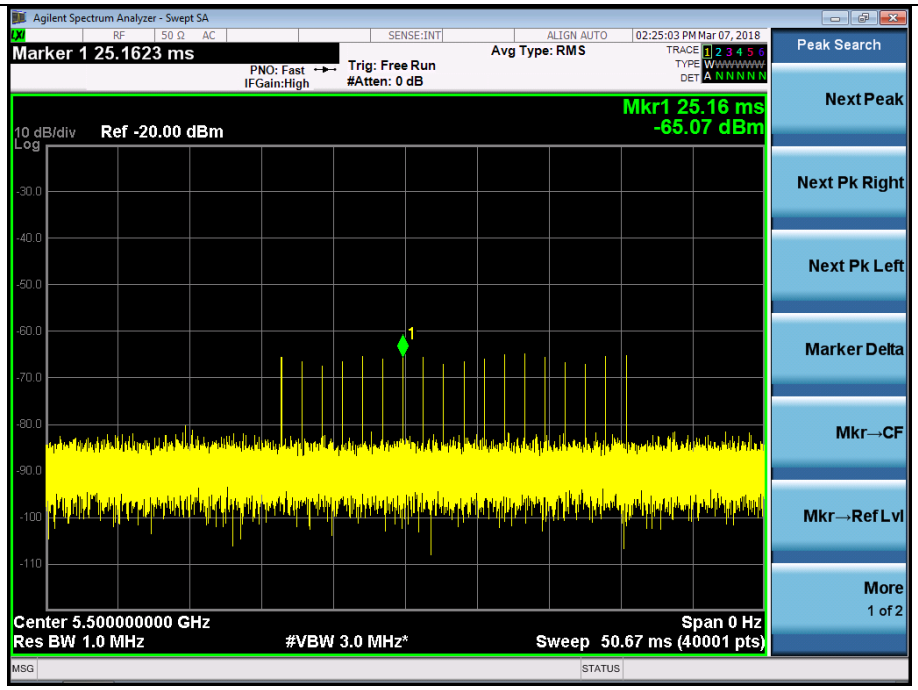
Agilent Spectrum Analyzer - Swept SA
Marker 1 25.1623 ms
PNO: Fast
IFGain:High
Trig: Free Run
#Atten: 0 dB
Avg Type: RMS
02:25:03 PM Mar 07, 2018
Mkr1 25.16 ms
-65.07 dBm
10 dB/div
Ref -20.00 dBm
Log
Center 5.500000000 GHz
Res BW 1.0 MHz
#VBW 3.0 MHz*
Span 0 Hz
Sweep 50.67 ms (40001 pts)
Peak Search
Next Peak
Next Pk Right
Next Pk Left
Marker Delta
Mkr→CF
Mkr→Ref Lvl
More
1 of 2

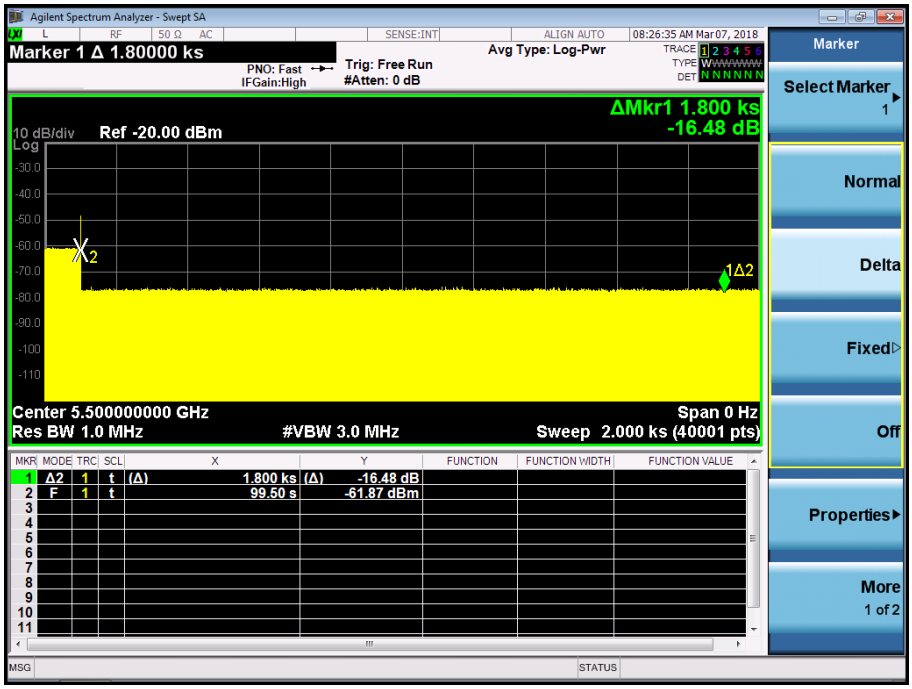
Agilent Spectrum Analyzer - Swept SA
Marker 1 Δ 1.80000 ks
PNO: Fast
IFGain:High
Trig: Free Run
#Atten: 0 dB
Avg Type: Log-Pwr
08:26:35 AM Mar 07, 2018
ΔMkr1 1.800 ks
-16.48 dB
10 dB/div
Ref -20.00 dBm
Log
Center 5.500000000 GHz
Res BW 1.0 MHz
#VBW 3.0 MHz
Span 0 Hz
Sweep 2.000 ks (40001 pts)
1 Δ2 1 t (Δ) 1.800 ks (Δ) -16.48 dB
2 F 1 t 99.50 s -61.87 dBm
Marker
Select Marker 1
Normal
Delta
Fixed
Off
Properties
More
1 of 2

8.3 IN-SERVICE MONITORING

UNII Band II-A

Radar test singal type 0					Detection(Y/N)
Trial ID	Pulse Width(us)	PRI(us)	Number of Pulses	Waveform Length(us)	
0	1.0	1428.0	18	25704.0	Y
1	1.0	1428.0	18	25704.0	Y
2	1.0	1428.0	18	25704.0	Y
3	1.0	1428.0	18	25704.0	N
4	1.0	1428.0	18	25704.0	Y
5	1.0	1428.0	18	25704.0	Y
6	1.0	1428.0	18	25704.0	Y
7	1.0	1428.0	18	25704.0	Y
8	1.0	1428.0	18	25704.0	N
9	1.0	1428.0	18	25704.0	Y
10	1.0	1428.0	18	25704.0	Y
11	1.0	1428.0	18	25704.0	Y
12	1.0	1428.0	18	25704.0	Y
13	1.0	1428.0	18	25704.0	Y
14	1.0	1428.0	18	25704.0	Y
15	1.0	1428.0	18	25704.0	Y
16	1.0	1428.0	18	25704.0	Y
17	1.0	1428.0	18	25704.0	Y
18	1.0	1428.0	18	25704.0	Y
19	1.0	1428.0	18	25704.0	Y
20	1.0	1428.0	18	25704.0	Y
21	1.0	1428.0	18	25704.0	Y
22	1.0	1428.0	18	25704.0	Y
23	1.0	1428.0	18	25704.0	Y
24	1.0	1428.0	18	25704.0	Y
25	1.0	1428.0	18	25704.0	Y
26	1.0	1428.0	18	25704.0	N
27	1.0	1428.0	18	25704.0	Y
28	1.0	1428.0	18	25704.0	Y
29	1.0	1428.0	18	25704.0	Y
Detection Rate					90.0%

UNII Band II-C

Radar test singal type 0					Detection(Y/N)
Trial ID	Pulse Width(us)	PRI(us)	Number of Pulses	Waveform Length(us)	
0	1.0	1428.0	18	25704.0	Y
1	1.0	1428.0	18	25704.0	Y
2	1.0	1428.0	18	25704.0	Y
3	1.0	1428.0	18	25704.0	Y
4	1.0	1428.0	18	25704.0	N
5	1.0	1428.0	18	25704.0	Y
6	1.0	1428.0	18	25704.0	Y
7	1.0	1428.0	18	25704.0	Y
8	1.0	1428.0	18	25704.0	Y
9	1.0	1428.0	18	25704.0	Y
10	1.0	1428.0	18	25704.0	N
11	1.0	1428.0	18	25704.0	Y
12	1.0	1428.0	18	25704.0	Y
13	1.0	1428.0	18	25704.0	Y
14	1.0	1428.0	18	25704.0	Y
15	1.0	1428.0	18	25704.0	Y
16	1.0	1428.0	18	25704.0	N
17	1.0	1428.0	18	25704.0	Y
18	1.0	1428.0	18	25704.0	Y
19	1.0	1428.0	18	25704.0	Y
20	1.0	1428.0	18	25704.0	Y
21	1.0	1428.0	18	25704.0	Y
22	1.0	1428.0	18	25704.0	Y
23	1.0	1428.0	18	25704.0	Y
24	1.0	1428.0	18	25704.0	Y
25	1.0	1428.0	18	25704.0	Y
26	1.0	1428.0	18	25704.0	Y
27	1.0	1428.0	18	25704.0	N
28	1.0	1428.0	18	25704.0	Y
29	1.0	1428.0	18	25704.0	Y
Detection Rate					86.5%

In-Service Monitoring		
Channel Move Time and Channel Closing Transmission Time	☐Master Mode	☒Slave Mode
Operation Frequency	5530MHz	

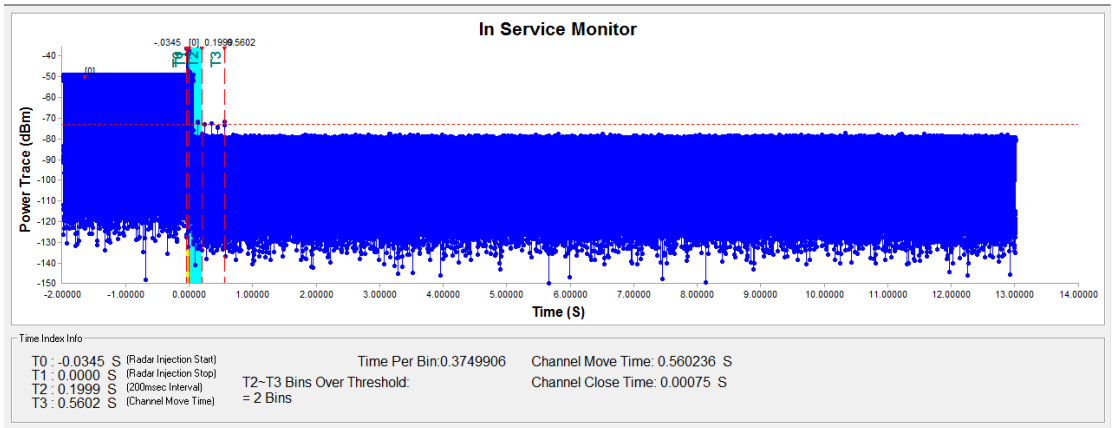

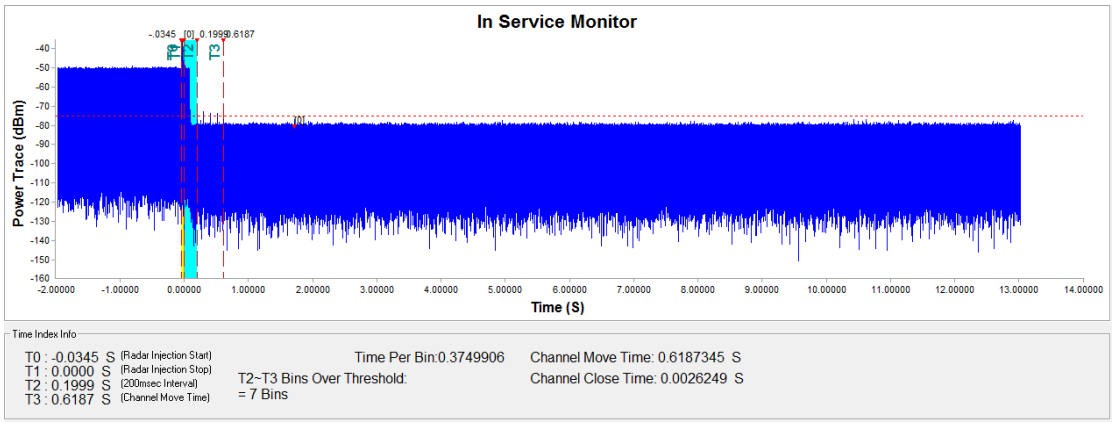

Note: T0 = End of Radar Burst
T1 = 200ms from end of Radar Burst
T2 = 10sec from end of Burst
T3 = Last traffic burst from Client (Channel Move Time)

End of Report