FCC Test Report

Applicant	:	**Shenzhen Hongshanjie Technology Co., Ltd**
Address	:	**2/F, No.20, Jiuwei 1st Road, Jiuwei Community, Hangcheng Street, Bao'an District, Shenzhen, China**
Product Name	:	**Wireless Charging Power Bank**
Report Date	:	**May 28, 2024**

Shenzhen Anbotek Compliance Laboratory Limited

Contents

1. General Information 5
1.1. Client Information 5
1.2. Description of Device (EUT) 5
1.3. Auxiliary Equipment Used During Test 6
1.4. Description of Test Modes 6
1.5. Description Of Test Setup 7
1.6. Test Equipment List 8
1.7. Measurement Uncertainty 9
1.8. Description of Test Facility 9
1.9. Disclaimer 10
2. Summary of Test Results 11
3. Conducted Emission Test 12
3.1. Test Standard and Limit 12
3.2. Test Setup 12
3.3. Test Procedure 12
3.4. Test Data 12
4. Radiation Spurious Emission 15
4.1. Test Standard and Limit 15
4.2. Test Setup 15
4.3. Test Procedure 16
4.4. Test Data 16
5. Antenna Requirement 21
5.1. Test Standard and Requirement 21
5.2. Antenna Connected Construction 21
APPENDIX I -- TEST SETUP PHOTOGRAPH 22
APPENDIX II -- EXTERNAL PHOTOGRAPH 22
APPENDIX III -- INTERNAL PHOTOGRAPH 22

TEST REPORT

Applicant	:	Shenzhen Hongshanjie Technology Co., Ltd
Manufacturer	:	Shenzhen Hongshanjie Technology Co., Ltd
Product Name	:	Wireless Charging Power Bank
Test Model No.	:	10052
Reference Model No.	:	10053, 10054, 10055
Trade Mark	:	N/A
Rating(s)	:	Input: Micro: 5.0V⎓ 2.0A, 9.0V⎓ 2.0A, 12.0V⎓ 1.5A Type-C: 5.0V⎓ 3.0A, 9.0V⎓ 2.0A, 12.0V⎓ 1.5A Lighting: 5.0V⎓ 2.0A USB cable: 5.0V⎓ 2.0A Output: Type-C: 5.0V⎓ 3.0A, 9.0V⎓ 2.2A, 12.0V⎓ 1.67A USB-A: 5.0V⎓ 3.0A,9.0V⎓ 2.0A,12.0V⎓ 1.5A Type-C cable: 5.0V⎓ 3.0A, 9.0V⎓ 2.2A, 12.0V⎓ 1.67A Lighting cable:5.0V⎓ 2.0A Wireless:output:15W Max. Battery Capacity: 3.8V, 10000mAh, 38.5Wh

Test Standard(s)	:	**47 CFR Part 15 Subpart C**
Test Method(s)	:	**ANSI C63.10: 2020**

The device described above is tested by Shenzhen Anbotek Compliance Laboratory Limited to determine the maximum emission levels emanating from the device and the severe levels of the device can endure and its performance criterion. The measurement results are contained in this test report and Shenzhen Anbotek Compliance Laboratory Limited is assumed full of responsibility for the accuracy and completeness of these measurements. Also, this report shows that the EUT (Equipment Under Test) is technically compliant with the 47 CFR Part 15 Subpart C requirements.
This report applies to above tested sample only and shall not be reproduced in part without written approval of Shenzhen Anbotek Compliance Laboratory Limited.

Date of Receipt	Apr. 09, 2024
Date of Test	Apr. 08, 2024~Apr. 28, 2024
Prepared By	Ella Liang (Ella Liang)
Approved & Authorized Signer	Edward pan (Edward Pan)

Revision History

Report Version	Description	Issued Date
R00	Original Issue.	May 28, 2024

1. General Information

1.1. Client Information

Applicant	:	Shenzhen Hongshanjie Technology Co., Ltd
Address	:	2/F, No.20, Jiuwei 1st Road, Jiuwei Community, Hangcheng Street, Bao'an District, Shenzhen, China
Manufacturer	:	Shenzhen Hongshanjie Technology Co., Ltd
Address	:	2/F, No.20, Jiuwei 1st Road, Jiuwei Community, Hangcheng Street, Bao'an District, Shenzhen, China
Factory	:	Shenzhen Hongshanjie Technology Co., Ltd
Address	:	2/F, No.20, Jiuwei 1st Road, Jiuwei Community, Hangcheng Street, Bao'an District, Shenzhen, China

1.2. Description of Device (EUT)

Product Name	:	Wireless Charging Power Bank
Test Model No.	:	10052
Reference Model No.	:	10053, 10054, 10055 (Note: All samples are the same except the model number and appearance color, so we prepare "10052" for test only.)
Trade Mark	:	N/A
Test Power Supply	:	AC 120V, 60Hz for adapter, DC 3.7V battery inside
Test Sample No.	:	1-2-1(Normal Sample), 1-2-2(Engineering Sample)
Adapter	:	N/A
RF Specification		
Operation Frequency	:	110.1-205kHz
Modulation Type	:	FSK
Antenna Type	:	Inductive loop coil Antenna
Antenna Gain(Peak)	:	0 dBi
Remark: 1) All of the RF specification are provided by customer. 2) For a more detailed features description, please refer to the manufacturer's specifications or the User's Manual.		

1.3. Auxiliary Equipment Used During Test

Title	Manufacturer	Model No.	Serial No.
Wireless charging load	Shenzhen Ouju Technology Co., Ltd.	CD2577	/
Adapter	Xiaomi	MDY-11-EX	SA62210G907929G

1.4. Description of Test Modes

To investigate the maximum EMI emission characteristics generates from EUT, the test system was pre-scanning tested base on the consideration of following EUT operation mode or test configuration mode which possible have effect on EMI emission level. Each of these EUT operation mode(s) or test configuration mode(s) mentioned above was evaluated respectively.

Pretest Mode	Description
Mode 1	Battery Charging Mode+ WPT Mode(Micro in)
Mode 2	Battery Charging Mode+ WPT Mode (Type-C in)
Mode 3	WPT discharging Mode

For Conducted Emission	
Final Test Mode	Description
Mode 1	Battery Charging Mode+ WPT Mode(Micro in)
Mode 2	Battery Charging Mode+ WPT Mode (Type-C in)

For Radiated Emission	
Final Test Mode	Description
Mode 1	Battery Charging Mode+ WPT Mode(Micro in)
Mode 2	Battery Charging Mode+ WPT Mode (Type-C in)
Mode 3	WPT discharging Mode

Note:

(1) Test channel is 0.1253MHz.

(2) All the situation(full load, half load and empty load) has been tested,only the worst situation (full load 15W) was recorded in the report.

1.5. Description Of Test Setup

CE

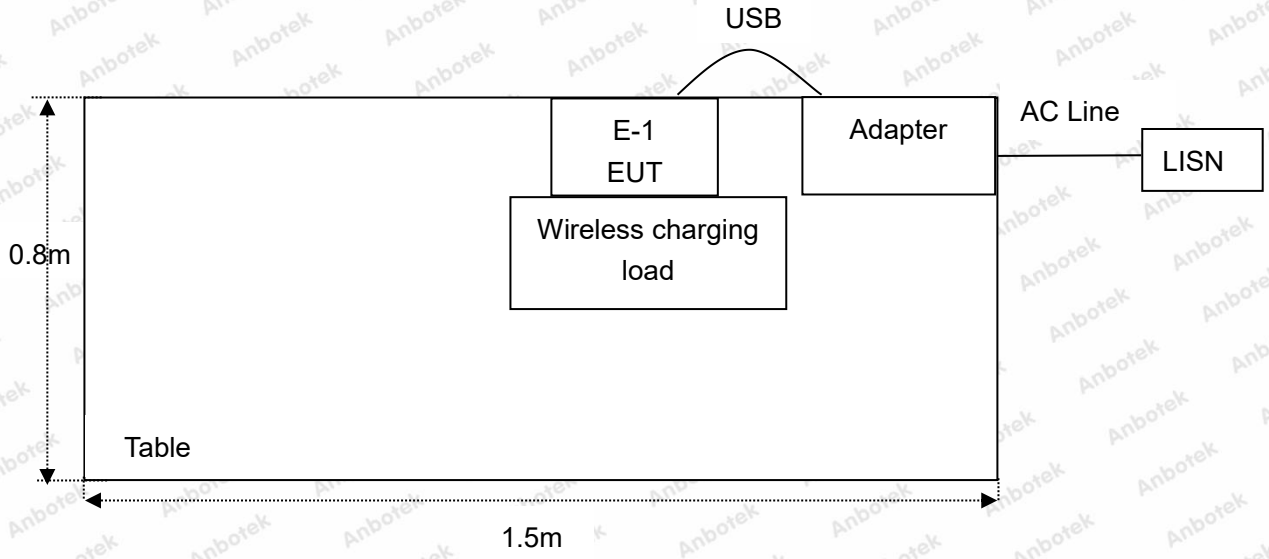

RE

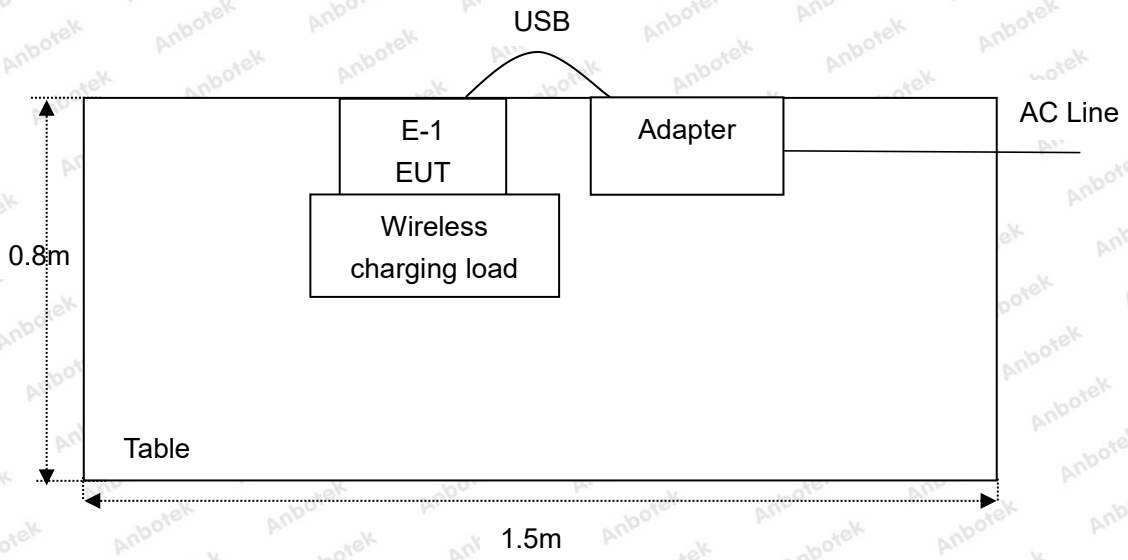

1.6. Test Equipment List

Item	Equipment	Manufacturer	Model No.	Serial No.	Last Cal.	Cal. Interval
1.	L.I.S.N. Artificial Mains Network	Rohde & Schwarz	ENV216	100055	Jan. 18, 2024	1 Year
2.	Three Phase V-type Artificial Power Network	CYBERTEK	EM5040DT	E215040DT001	Jan. 18, 2024	1 Year
3.	EMI Test Receiver	Rohde & Schwarz	ESCI	100627	Oct. 12, 2023	1 Year
4.	EMI Test Receiver	Rohde & Schwarz	ESR26	101481	Jan. 23, 2024	1 Year
5.	MXA Spectrum Analysis	Agilent	N9020A	MY51170037	Oct. 12, 2023	1 Year
6.	EMI Preamplifier	SKET Electronic	LNPA-0118G -45	SKET-PA-002	Jan. 17, 2024	1 Year
7.	Double Ridged Horn Antenna	SCHWARZBECK	BBHA 9120D	02555	Oct. 16, 2022	3 Year
8.	Bilog Broadband Antenna	Schwarzbeck	VULB9163	345	Oct. 23, 2022	3 Year
9.	Loop Antenna	Schwarzbeck	FMZB1519B	00053	Oct. 12, 2023	1 Year
10.	Horn Antenna	A-INFO	LB-180400-KF	J211060628	Oct. 12, 2023	1 Year
11.	Pre-amplifier	SONOMA	310N	186860	Jan. 17, 2024	1 Year
12.	EMI Test Software EZ-EMC	SHURPLE	N/A	N/A	N/A	N/A
13.	MXA Spectrum Analysis	KEYSIGHT	N9020A	MY53280032	Oct. 12, 2023	1 Year
14.	MXG RF Vector Signal Generator	Agilent	N5182A	MY48180656	Oct. 12, 2023	1 Year
15.	Signal Generator	Agilent	E4421B	MY41000743	Oct. 12, 2023	1 Year
16.	DC Power Supply	IVYTECH	IV3605	1804D360510	Oct. 20, 2023	1 Year
17.	Constant Temperature Humidity Chamber	ZHONGJIAN	ZJ-KHWS80 B	N/A	Oct. 16, 2023	1 Year
18.	Wideband Radio Communication Tester	Rohde & Schwarz	CMW500	104209	Oct. 12, 2023	1 Year

1.7. Measurement Uncertainty

Parameter	Uncertainty
Conducted emissions (AMN 150kHz~30MHz)	3.8dB
Radiated spurious emissions (Below 30MHz)	3.53dB
Radiated spurious emissions (30MHz~1GHz)	Horizontal: 3.92dB; Vertical: 4.52dB
The measurement uncertainty and decision risk evaluated according to AB/WI-RF-F-032. This uncertainty represents an expanded uncertainty expressed at approximately the 95% confidence level using a coverage factor of k=2.	

1.8. Description of Test Facility

The test facility is recognized, certified, or accredited by the following organizations:

FCC-Registration No.: 434132

Shenzhen Anbotek Compliance Laboratory Limited, EMC Laboratory has been registered and fully described in a report filed with the (FCC) Federal Communications Commission. The acceptance letter from the FCC is maintained in our files. Registration No. 434132.

ISED-Registration No.: 8058A

Shenzhen Anbotek Compliance Laboratory Limited, EMC Laboratory has been registered and fully described in a report filed with the (ISED) Innovation, Science and Economic Development Canada. The acceptance letter from the ISED is maintained in our files. Registration 8058A.

Test Location

Shenzhen Anbotek Compliance Laboratory Limited.
1/F, Building D, Sogood Science and Technology Park, Sanwei community, Hangcheng Street, Bao'an District, Shenzhen, Guangdong, China.

1.9. Disclaimer

1. The test report is invalid if not marked with the signatures of the persons responsible for preparing and approving the test report.
2. The test report is invalid if there is any evidence and/or falsification.
3. The results documented in this report apply only to the tested sample, under the conditions and modes of operation as described herein.
4. This document may not be altered or revised in any way unless done so by Anbotek and all revisions are duly noted in the revisions section.
5. Content of the test report, in part or in full, cannot be used for publicity and/or promotional purposes without prior written approval from the laboratory.
6. The authenticity of the information provided by the customer is the responsibility of the customer and the laboratory is not responsible for its authenticity.

The laboratory is only responsible for the data released by the laboratory, except for the part provided by the applicant.

2. Summary of Test Results

Standard Section	Test Item	Result
15.203	Antenna Requirement	PASS
15.207	Conducted Emission Test	PASS
15.205/15.209	Spurious Emission	PASS

3. Conducted Emission Test

3.1. Test Standard and Limit

Test Standard	FCC Part15 Section 15.207		
Test Limit	Frequency	Maximum RF Line Voltage (dBuV)	
		Quasi-peak Level	Average Level
	150kHz~500kHz	66 ~ 56 *	56 ~ 46 *
	500kHz~5MHz	56	46
	5MHz~30MHz	60	50
Remark: (1) *Decreasing linearly with logarithm of the frequency. (2) The lower limit shall apply at the transition frequency.			

3.2. Test Setup

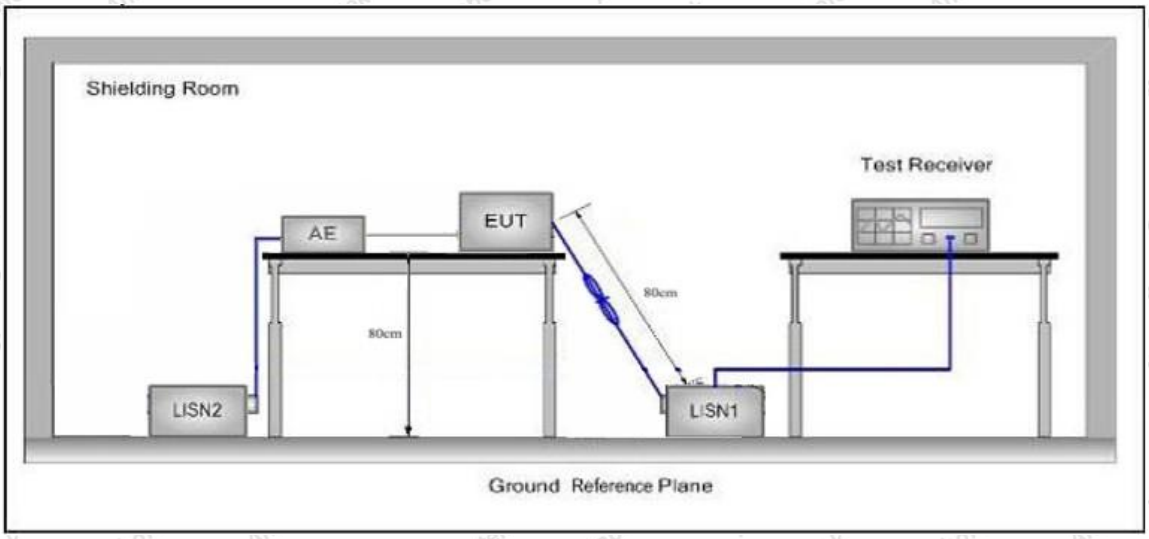

3.3. Test Procedure

The EUT system is connected to the power mains through a line impedance stabilization network (L.I.S.N.). This provides a 50ohm coupling impedance for the EUT system. Please refer the block diagram of the test setup and photographs. Both sides of AC line are checked to find out the maximum conducted emission. In order to find the maximum emission levels, the relative positions of equipment and all of the interface cables shall be changed according to FCC ANSI C63.10: 2020 on Conducted Emission Measurement.

The bandwidth of test receiver (ESCI) set at 9kHz.

The frequency range from 150kHz to 30MHz is checked.

3.4. Test Data

AC conducted emission pre-test at both at AC 120V/60Hz and AC 240V/60Hz modes, recorded worst case AC 120V/60Hz.

Please to see the following pages.

Conducted Emission Test Data

Test Site: 1# Shielded Room
Operating Condition: Mode 1
Test Specification: AC 120V, 60Hz for adapter
Comment: Live Line
Temp.(℃)/Hum.(%RH): 21.4℃/52%RH

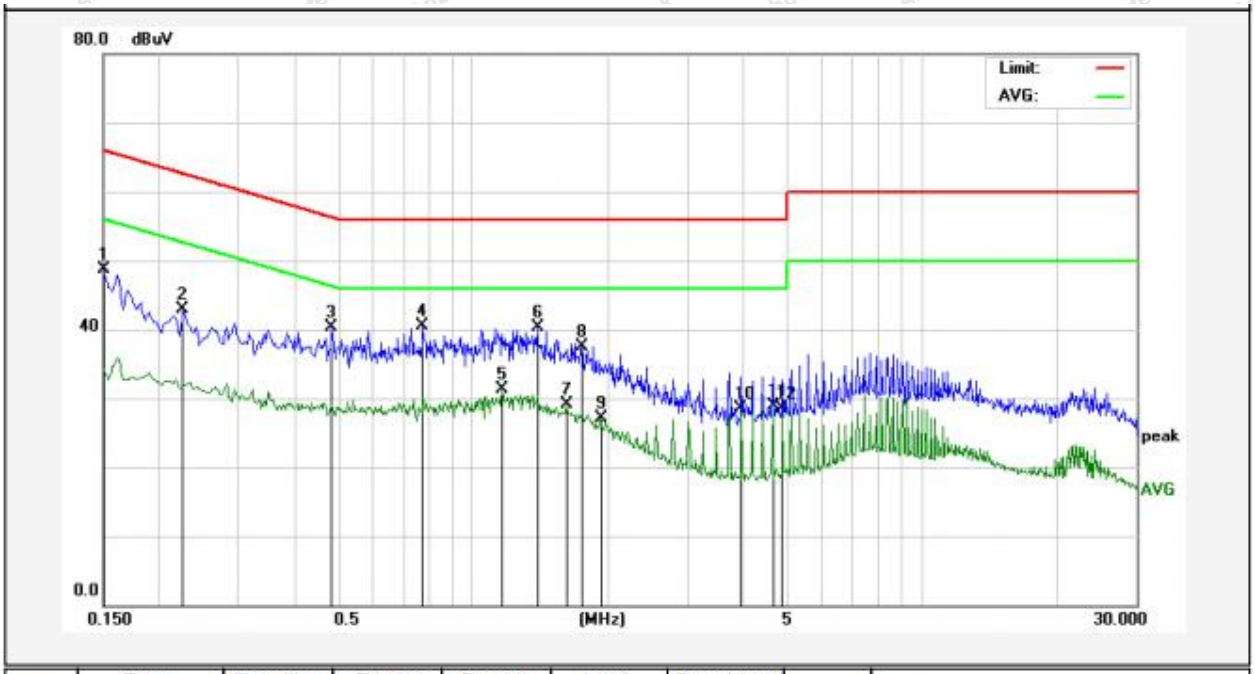

No.	Freq. (MHz)	Reading (dBuV)	Factor (dB)	Result (dBuV)	Limit (dBuV)	Over Limit (dB)	Detector	Remark
1	0.1500	30.82	17.82	48.64	65.99	-17.35	QP	
2	0.2260	25.17	17.83	43.00	62.59	-19.59	QP	
3	0.4860	22.52	17.84	40.36	56.24	-15.88	QP	
4	0.7740	22.68	17.87	40.55	56.00	-15.45	QP	
5	1.1620	13.44	17.85	31.29	46.00	-14.71	AVG	
6	1.3940	22.55	17.84	40.39	56.00	-15.61	QP	
7	1.6140	11.20	17.84	29.04	46.00	-16.96	AVG	
8	1.7500	19.71	17.84	37.55	56.00	-18.45	QP	
9	1.9220	9.19	17.83	27.02	46.00	-18.98	AVG	
10	3.9540	10.73	17.85	28.58	46.00	-17.42	AVG	
11	4.6500	10.98	17.85	28.83	46.00	-17.17	AVG	
12	4.8820	10.74	17.85	28.59	46.00	-17.41	AVG	

Conducted Emission Test Data

Test Site: 1# Shielded Room
Operating Condition: Mode 1
Test Specification: AC 120V, 60Hz for adapter
Comment: Neutral Line
Temp.(℃)/Hum.(%RH): 21.4℃/52%RH

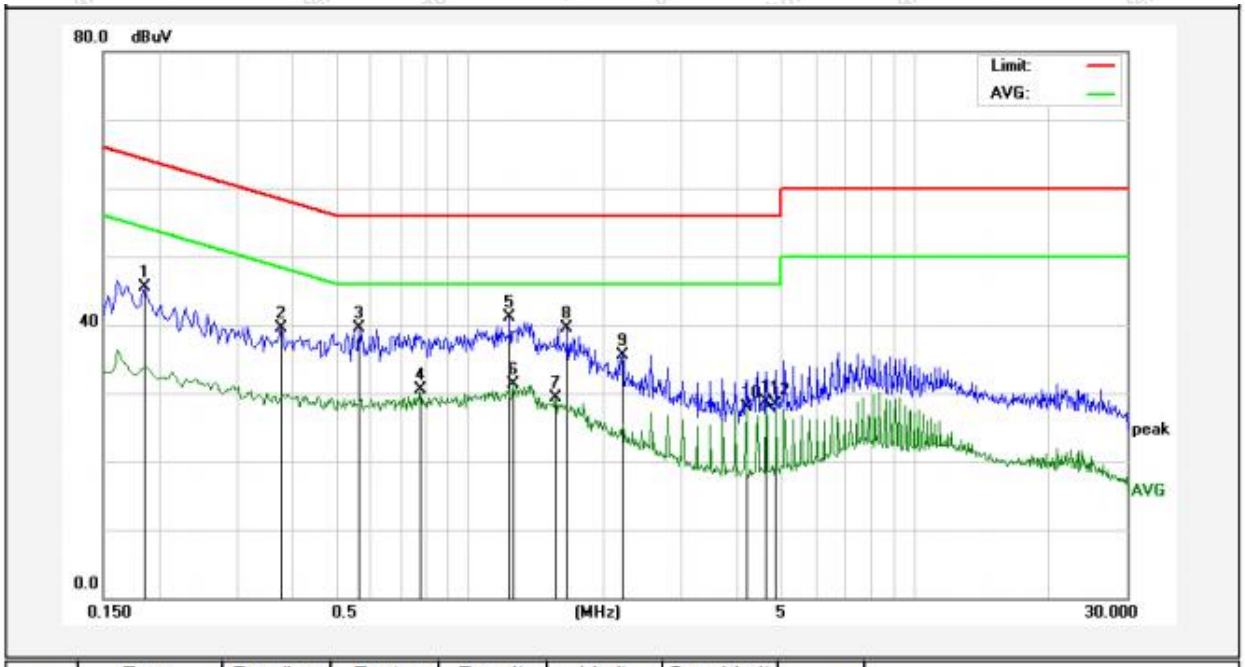

No.	Freq. (MHz)	Reading (dBuV)	Factor (dB)	Result (dBuV)	Limit (dBuV)	Over Limit (dB)	Detector	Remark
1	0.1860	27.69	17.83	45.52	64.21	-18.69	QP	
2	0.3780	21.74	17.81	39.55	58.32	-18.77	QP	
3	0.5660	21.58	17.86	39.44	56.00	-16.56	QP	
4	0.7780	12.65	17.86	30.51	46.00	-15.49	AVG	
5	1.2300	23.23	17.84	41.07	56.00	-14.93	QP	
6	1.2540	13.40	17.84	31.24	46.00	-14.76	AVG	
7	1.5660	11.43	17.84	29.27	46.00	-16.73	AVG	
8	1.6580	21.66	17.84	39.50	56.00	-16.50	QP	
9	2.2100	17.73	17.83	35.56	56.00	-20.44	QP	
10	4.1819	10.11	17.84	27.95	46.00	-18.05	AVG	
11	4.6459	10.80	17.85	28.65	46.00	-17.35	AVG	
12	4.8778	10.52	17.85	28.37	46.00	-17.63	AVG	

4. Radiation Spurious Emission

4.1. Test Standard and Limit

Test Standard	FCC Part15 C Section 15.209 and 15.205				
Test Limit	Frequency (MHz)	Field strength (microvolt/meter)	Limit (dBuV/m)	Remark	Measurement distance (m)
	0.009MHz~0.490MHz	2400/F(kHz)	-	-	300
	0.490MHz-1.705MHz	24000/F(kHz)	-	-	30
	1.705MHz-30MHz	30	-	-	30
	30MHz~88MHz	100	40.0	Quasi-peak	3
	88MHz~216MHz	150	43.5	Quasi-peak	3
	216MHz~960MHz	200	46.0	Quasi-peak	3
	960MHz~1000MHz	500	54.0	Quasi-peak	3
	Above 1000MHz	500	54.0	Average	3
		-	74.0	Peak	3

Remark:
(1)The lower limit shall apply at the transition frequency.
(2) 15.35(b), Unless otherwise specified, the limit on peak radio frequency emissions is 20dB above the maximum permitted average emission limit applicable to the equipment under test. This peak limit applies to the total peak emission level radiated by the device.

4.2. Test Setup

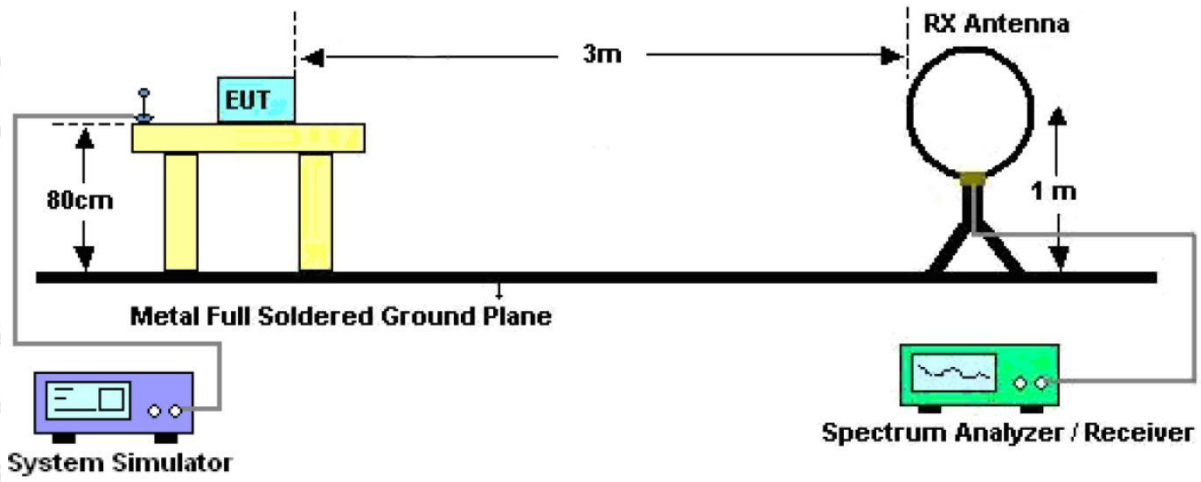

Figure 1. Below 30MHz

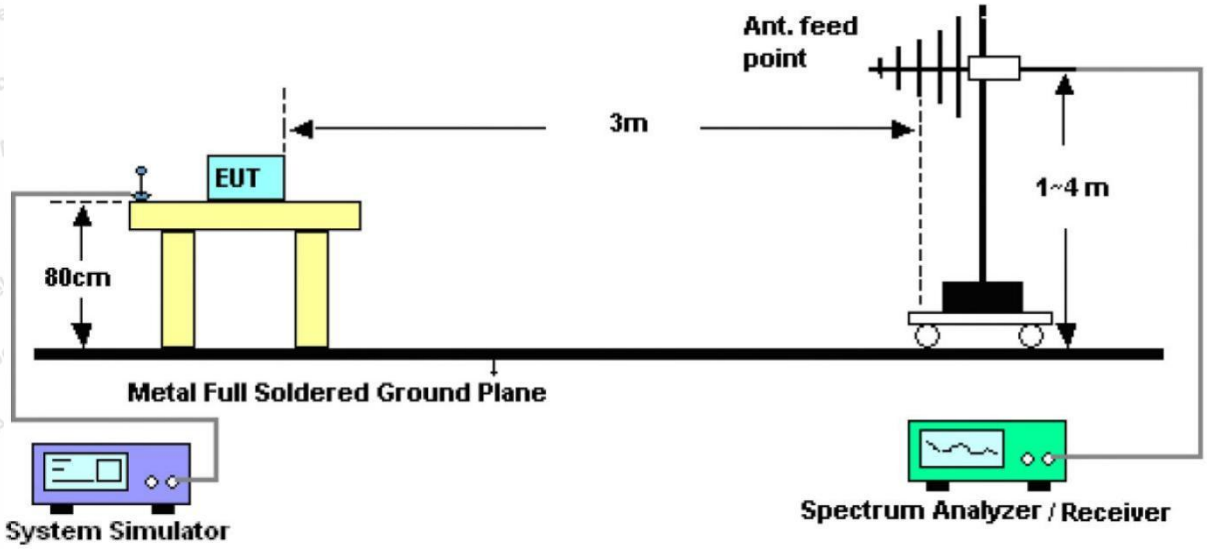

Figure 2. 30MHz to 1GHz

4.3. Test Procedure

For below 1GHz: The EUT is placed on a turntable, which is 0.8m above the ground plane.
The turn table can rotate 360 degrees to determine the position of the maximum emission level. The EUT is set 3 meters away from the receiving antenna which is mounted on a antenna tower. The antenna can be moved up and down from 1 to 4 meters to find out the maximum emission level. Rotated the EUT through three orthogonal axes to determine the maximum emissions, both horizontal and vertical polarization of the antenna are set on test. The EUT is tested in 9*6*6 Chamber. The device is evaluated in xyz orientation.

For 9kHz to 150kHz, Set the spectrum analyzer as:
RBW = 200Hz, VBW =1kHz, Detector= Quasi-Peak, Trace mode= Max hold, Sweep- auto couple.

For 150kHz to 30MHz, Set the spectrum analyzer as:
RBW = 9KHz, VBW =30kHz, Detector= Quasi-Peak, Trace mode= Max hold, Sweep- auto couple.

For 30MHz to 1000MHz, Set the spectrum analyzer as:
RBW = 100kHz, VBW =300kHz, Detector= Quasi-Peak, Trace mode= Max hold, Sweep- auto couple.

4.4. Test Data

PASS

During the test, Pre-scan all kind of the place mode (X-axis, Y-axis, Z-axis), and found the X-axis is the worst case.

Test Results (Between 9KHz – 150KHz)

Test Mode: Mode 1

Distance: 3m

Power Source: AC 120V, 60Hz for adapter

Temp.(℃)/Hum.(%RH): 22.5℃/50%RH

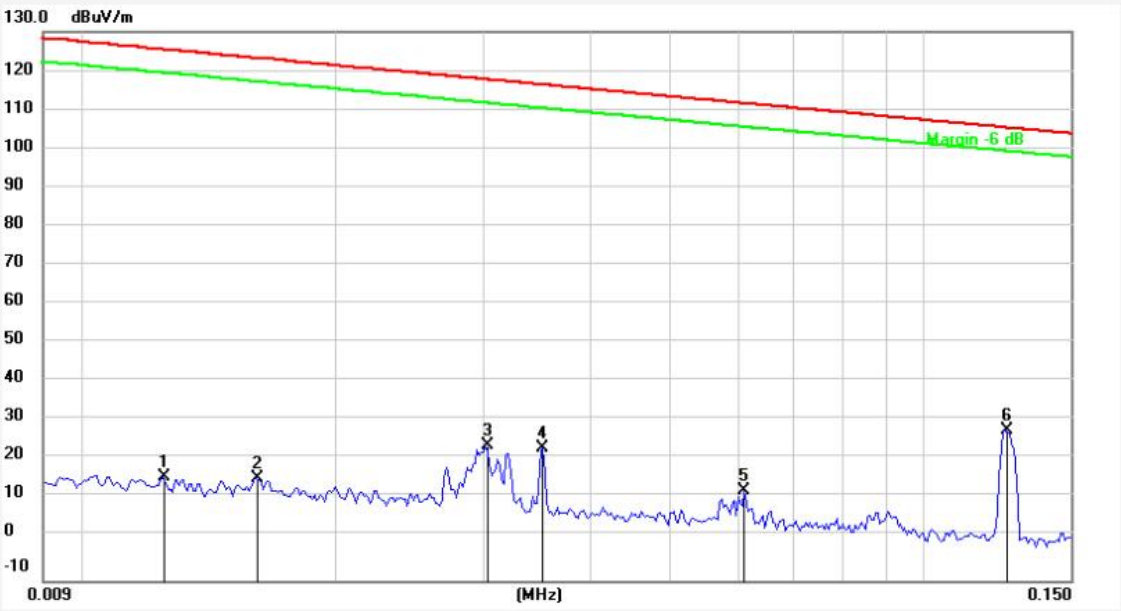

No.	Freq. (MHz)	Reading (dBuV)	Factor ()	Result (dBuV/m)	Limit (dBuV/m)	Over Limit (dB)	Detector	Height (cm)	degree (deg)	Remark
1	0.0125	-3.79	20.13	16.34	125.47	-109.13	QP			
2	0.0161	-4.27	20.28	16.01	123.29	-107.28	QP			
3	0.0302	3.84	20.54	24.38	117.86	-93.48	QP			
4	0.0353	3.15	20.47	23.62	116.51	-92.89	QP			
5	0.0613	-7.42	20.37	12.95	111.74	-98.79	QP			
6	0.1253	7.95	20.33	28.28	105.57	-77.29	QP			

Test Results (Between 0.15MHz – 30MHz)

Test Mode:	Mode 1
Distance:	3m
Power Source:	AC 120V, 60Hz for adapter
Temp.(℃)/Hum.(%RH):	22.5℃/50%RH

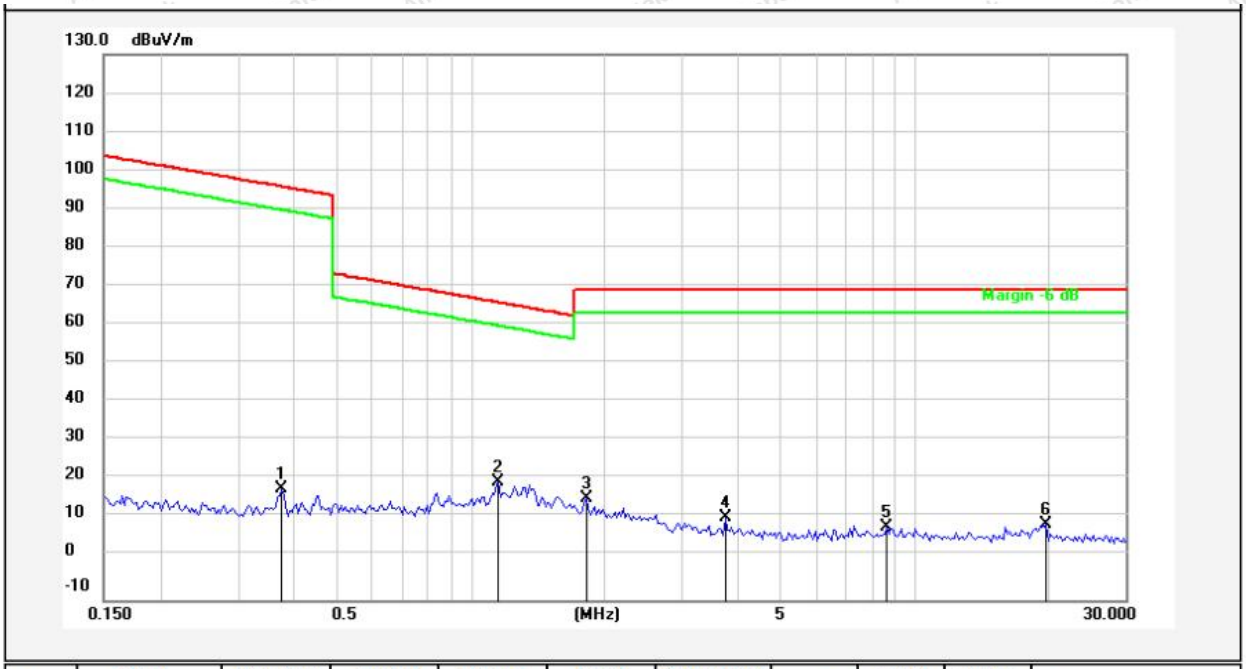

No.	Freq. (MHz)	Reading (dBuV)	Factor ()	Result (dBuV/m)	Limit (dBuV/m)	Over Limit (dB)	Detector	Height (cm)	degree (deg)	Remark
1	0.3771	-1.92	20.28	18.36	96.06	-77.70	QP			
2	1.1595	-0.06	20.26	20.20	66.34	-46.14	QP			
3	1.8288	-4.24	20.27	16.03	69.50	-53.47	QP			
4	3.7593	-9.16	20.35	11.19	69.50	-58.31	QP			
5	8.6832	-11.66	20.51	8.85	69.50	-60.65	QP			
6	19.8445	-11.04	20.59	9.55	69.50	-59.95	QP			

Remark: According to FCC PART 15.209 (d), the emission limits for the frequency bands 9–90 kHz, 110–490 kHz and above 1000 MHz, Radiated emission limits in these three bands are based on measurements employing an average detector.

Test Results (Between 30MHz –1000 MHz)

Test Mode:	Mode 3
Distance:	3m
Power Source:	DC 3.7V battery inside
Polarization:	Vertical
Temp.(℃)/Hum.(%RH):	22.5℃/50%RH

No.	Freq. (MHz)	Reading (dBuV)	Factor (dB/m)	Result (dBuV/m)	Limit (dBuV/m)	Over Limit (dB)	Detector	Height (cm)	degree (deg)	Remark
1	51.4807	34.65	-16.32	18.33	40.00	-21.67	QP			
2	65.8031	39.17	-19.43	19.74	40.00	-20.26	QP			
3	80.6442	39.80	-19.21	20.59	40.00	-19.41	QP			
4	176.2686	42.79	-20.79	22.00	43.50	-21.50	QP			
5	435.5898	37.80	-13.89	23.91	46.00	-22.09	QP			
6	919.2866	33.67	-5.99	27.68	46.00	-18.32	QP			

Test Mode: Mode 3
Distance: 3m
Power Source: DC 3.7V battery inside
Polarization: Horizontal
Temp.(℃)/Hum.(%RH): 22.5℃/50%RH

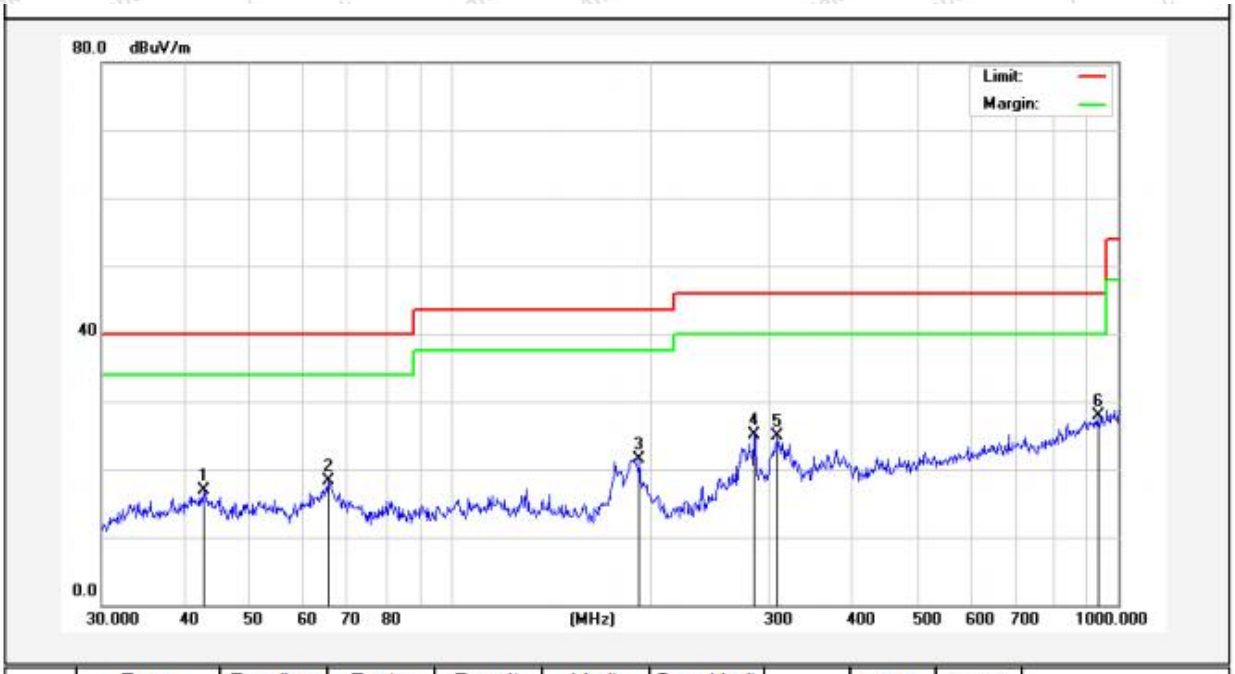

No.	Freq. (MHz)	Reading (dBuV)	Factor (dB/m)	Result (dBuV/m)	Limit (dBuV/m)	Over Limit (dB)	Detector	Height (cm)	degree (deg)	Remark
1	42.7496	32.41	-15.57	16.84	40.00	-23.16	QP			
2	65.5727	38.05	-19.66	18.39	40.00	-21.61	QP			
3	191.7450	44.24	-22.68	21.56	43.50	-21.94	QP			
4	284.9767	43.61	-18.46	25.15	46.00	-20.85	QP			
5	308.9126	41.90	-16.96	24.94	46.00	-21.06	QP			
6	932.2715	33.66	-5.85	27.81	46.00	-18.19	QP			

5. Antenna Requirement

5.1. Test Standard and Requirement

Test Standard	FCC Part15 Section 15.203
Requirement	1) 15.203 requirement: An intentional radiator shall be designed to ensure that no antenna other than that furnished by the responsible party shall be used with the device. The use of a permanently attached antenna or of an antenna that uses a unique coupling to the intentional radiator, the manufacturer may design the unit so that a broken antenna can be replaced by the user, but the use of a standard antenna jack or electrical connector is prohibited.

5.2. Antenna Connected Construction

The antenna is a Inductive loop coil Antenna which permanently attached, and the best case gain of the antenna is 0 dBi. It complies with the standard requirement.

APPENDIX I -- TEST SETUP PHOTOGRAPH

Please refer to separated files Appendix I -- Test Setup Photograph_RF

APPENDIX II -- EXTERNAL PHOTOGRAPH

Please refer to separated files Appendix II -- External Photograph

APPENDIX III -- INTERNAL PHOTOGRAPH

Please refer to separated files Appendix III -- Internal Photograph

---------- End of Report ----------