Handy Skin Sensor Ⅱ

Instruction Manual

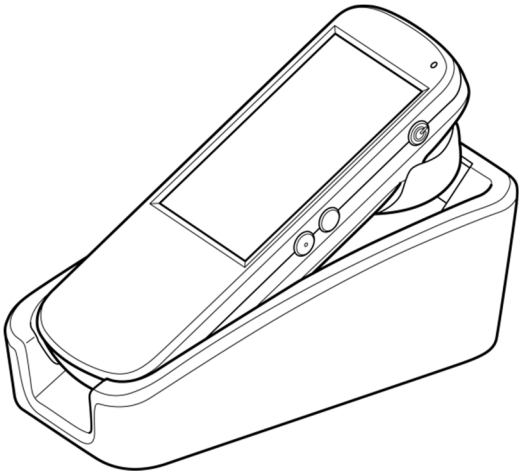

SHISEIDO

Contents

◆ For your safety …2
◆ Notes on use/Cleaning instructions …4
1. Components …9
2. Setting up (Sensor Stand) …12
3. Charging Sensor …14
4. Charging Rechargeable battery …15
5. Changing Rechargeable battery (Sensor) …16
◆ Troubleshooting …18
◆ USB connection with the designated device …21
◆ Specifications …22

This manual contains important information regarding the safe use of this product.

Read all the safety and operating instructions before operating the product.

◆ For your safety

The precautions described in this manual are to ensure safe use of the unit and to prevent harm or injury to you and others. The manufacturer and vendor of this product take no responsibility for any personal injury or other accidental damage that may occur as a result of incorrect or inappropriate use of the product.
In particular, be sure to read the manual to ensure that you are familiar with all aspects of safety in using this unit. After reading this manual, keep it in a safe place for further reference when necessary.

⚠ Warning	Failure to follow the instructions will cause danger which will almost certainly result in death or serious injury.

- Do not get this unit wet. Do not use it with your wet hand. Doing so may cause electric shocks or malfunction.
- Do not shine the light from this unit directly to the eye. Doing so may damage eyesight.
- Do not disassemble, repair or modify (e.g. by soldering) the unit. Doing so may cause an accident, fire or electric shocks.
- Do not leave the unit in places where it may be exposed to high temperatures such as direct sunlight, a heat source and flame (e.g., inside a vehicle during summer). Doing so may increase the internal temperature and cause explosion or fire.
- Do not use this unit in places where it may be exposed to oil fumes, steam, high humidity, chemicals or dust. Water, oil, grime, humidity or dust inside the unit may damage the internal components. It may also cause malfunction, smoking or fire.
- Stop using this unit, turn off the power and remove the batteries immediately if any of the following occurs: water or a foreign object entering inside the unit; damage to the outer case; overheating; smoking; odor. Failure to do so may cause fire or electric shocks.
- In case of lightening, disconnect the AC adapter from the outlet and do not touch metallic parts of this unit or the batteries. Failure to do so may cause electric shocks from a lightning strike.
- Do not place this unit near electrical equipment that uses a high-precision control device or weak electrical signal (including electronic medical devices in your body). Failure to do so may cause malfunction in the other equipment.

◆ For your safety

⚠ Caution	Failure to follow the instructions may result in personal injury or physical damage to equipment and surroundings.

- If liquid crystal leaks from the screen, do not handle with bare hands. Doing so may cause skin irritation. Should hands or clothing come in contact, wash immediately with water.
- Do not insert a finger or metal object like a wire into the unit. Doing so may cause personal injury and damage to the unit.
- Keep out of the reach of children to prevent injury.
- Do not leave the lens facing directly toward the sun or other source of strong light. It may cause fire or damage internal components.
- Do not use this unit inside a vehicle such as an airplane. Electromagnetic waves emitted by this unit may interfere with the vehicle. Do not use near medical instrument such as inside a hospital.

◆ Notes on use

- Do not use this unit for purposes other than skin analysis.
- This unit is precision equipment. Do not drop or knock it against other objects. If this unit is subjected to any strong shocks, it may result in malfunction.
- Do not place or use in a location where it will be exposed to grime or dust. They may get inside the sensor and damage the unit.
- Only use the included lithium-ion rechargeable batteries, and set them in the correct direction. Failure to do so may cause overheating, fire and damage.
- When used for an extended period of time, Sensor may feel warm. This will not affect performance or quality. If it feels unusually hot, turn off the power and then remove the batteries.
- Remove the batteries when the unit is not in use for a long time to avoid leakage and loose connection.
- If the unit has not been used for a long time, the battery may lose power through self-discharge. Change it or charge before use.
- Do not place on an unstable surface. Dropping may result in an accident or injury.
- A rapid change in temperature may cause condensation. If condensation occurs, do not use the unit immediately. Wait until it is dry before use.
- Do not use near a cell phone or a microwave treatment device. It may not function properly due to magnetism.
- When attaching a strap, use a durable one to prevent dropping the unit. Dropping may damage the unit.
- Do not use the USB cable for devices other than the specified device. It may result in damage or malfunction.

◆ Cleaning instructions

- Remove Rechargeable batteries.
- Do not clean with solvent such as benzene or paint thinner.
- Use a dry cloth to wipe the display screen.
- Do not clean the interior of the camera inside the tip of Sensor. It may damage the lens or the light, and result in malfunction.

◆ About wireless LAN (IEEE802.11a,

IEEE802.11b,IEEE802.11g,IEEE802.11n）

- If the radio equipment uses the above listed 2.4GHz band channels, you can use all the bandwidth and avoid channels used by radio-frequency identification readers. It employs DSSS modulation method and OFDM modulation method, and the interference range is 40m.
- This unit uses the same frequency band as other industrial, scientific, and medical equipment including a microwave oven, as well as radio-frequency identification readers (radio stations requiring the license) and specified low power radio frequency station (requiring no license) used in factories and manufacturing lines.
    1) Before using this unit, be sure there is no specified low power radio frequency station or radio-frequency identification reader in use nearby.
    2) If this unit interferes with a radio-frequency identification reader, immediately stop data transmission and contact Support Center for further instructions.
- Depending on your wireless LAN environment including the structure/material of the building, obstacles, software and signal transmission, the speed of the connection will vary. Note the connection may also slow down or be interrupted.
- Check with the airline before carrying this unit on an airplane.

◆ About the 5GHz band channels

- This unit can use the 5GHz band. It uses the following channels. Note, in Japan (Radio Act) and some countries, laws prohibit use of 5.2GHz and 5.3GHz bands outdoor.
    - W52 (5.2GHz band/36,40,44,48ch)
    - W53 (5.3GHz band/52,56,60,64ch)
    - W56 (5.6GHz band/100,104,108,112,116,120,124,128,132,136,140ch)
- Use of Wi-Fi is subject to local laws and regulations in your country/region.

◆Directive on Waste Electrical and Electronic Equipment [WEEE] (2012/19/EU)

- This product shall be compliant with WEEE marking requirements (2012/19/EU).

  Hereinafter, the CE marking indicates that this electronic equipment shall not be waste as household waste.

  manufacturer is compliant with all applicable legal requirements of the EU "New Approach Directives" and European Regulations.

  When they are disposed of within the European community, please contact Europe of SHISEIDO.

  Make sure the electronic equipment waste should not be disposed of in the regular trash as household waste.

- HSSⅡ products are a built-in battery type.

  If you are selling them in the E.U., you are required to provide the product data complying with the "revised Directive on Waste Electrical and Electronic Equipment [2012/19/EU].

- Since the internal batteries of HSSⅡ products cannot be replaced, when they are disposed of, they are collected and disassembled in accordance with the WEEE directive. Then, the batteries shall be recycled based on the WEEE directive.

  Thus, when the HSS products are disposed of within E.U., please contact Europe of SHISEIDO.

  When you need the "Product Data Sheet" related to the internal batteries (issued by battery manufacturer), please ask for it to Europa of SHISEIDO.

◆ FCC / IC Compliment statement

- Note : This equipment has been tested and found to comply with the limits for a Class B digital device, pursuant to part 15 of the FCC Rules. These limits are designed to provide reasonable protection against harmful interference in a residential installation. This equipment generates, uses and can radiate radio frequency energy and, if not installed and used in accordance with the instructions, may cause harmful interference to radio communications. However, there is no guarantee that interference will not occur in a particular installation.
  If this equipment does cause harmful interference to radio or television reception, which can be determined by turning the equipment off and on, the user is encouraged to try to correct the interference by one or more of the following measures:
  − Reorient or relocate the receiving antenna.
  − Increase the separation between the equipment and receiver.
  − Connect the equipment into an outlet on a circuit different from that to which the receiver is connected.
  − Consult the dealer or an experienced radio/TV technician for help.

  Cet équipement a été testé et trouvé conforme aux limites pour un appareil numérique de Classe B, conformément à la partie 15 des règles FCC. Ces limites sont conçues pour fournir une protection raisonnable contre les interférences nuisibles dans une installation résidentielle. Cet équipement génère, utilise et peut émettre une énergie de fréquence radio et, s'il n'est pas installé et utilisé conformément aux instructions, peut causer des interférences nuisibles aux communications radio. Cependant, il n'y a aucune garantie que des interférences ne se produiront pas dans une installation particulière. Si cet équipement provoque des interferences nuisibles à la réception radio ou télévision, ce qui peut être déterminé en éteignant l'équipement, l'utilisateur est encouragé à essayer de corriger les interférences en prenant une ou plusieurs des mesures suivantes :

  ― Réorientez ou déplacez l'antenne de réception.
  ― Augmenter la distance entre l'équipement et le récepteur.

— Connecter l'équipement à une prise sur un circuit différent de celui auquel le récepteur est connecté.
— Consulter le revendeur ou un technicien radio/télévision expérimenté.

- Operation is subject to the following two conditions: (1) this device may not cause interference, and (2) this device must accept any interference, including interference that may cause undesired operation of the device.

  L'opération est soumise aux deux conditions suivantes: (1) cet appareil ne doit pas causer d'interférences, et (2) cet appareil doit accepter toute interférence, y compris les interférences pouvant entraîner un fonctionnement indésirable de l'appareil.

- RF exposure compliance
  This transmitter must not be co-located or operating in conjunction with any other antenna or transmitter.

  Cet émetteur ne doit pas être localisé ou fonctionner avec toute autre antenne ou émetteur.

⚠ Caution

Any changes or modifications not expressly approved by the party responsible for compliance could void the user's authority to operate the equipment.

Les changements ou modifications non expressément approuvés par la partie responsable de la conformité pourrait annuler l'autorisation d'utilisation de l'équipement.

1. Components

Sensor

(Front)

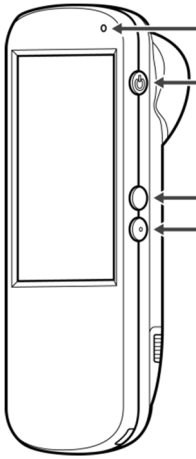

(Back)

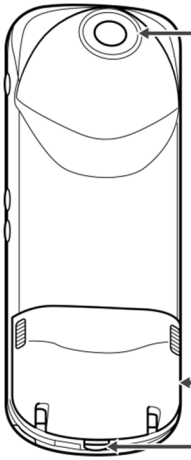

(Side)

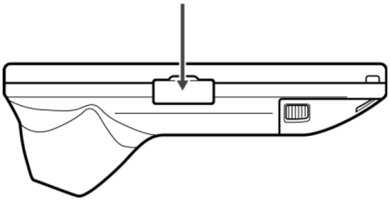

(With Battery compartment cover open)

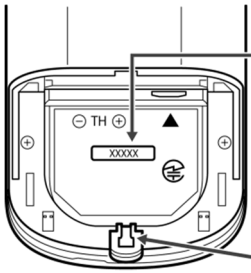

(With Connector cover open)

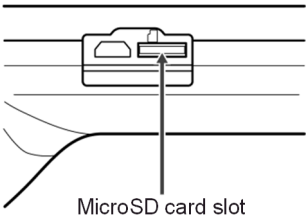

*Turn off the power when removing the Connector cover.

(With Cable hole cover open)

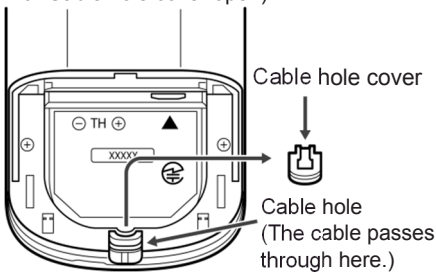

*If you remove Cable hole cover, store safely in a packaging box.

*Serial number is printed on Sensor (in Battery compartment) and on Sensor stand (on the back and the back of the skin tone calibration plate).

1. Components

Sensor stand

(Front)

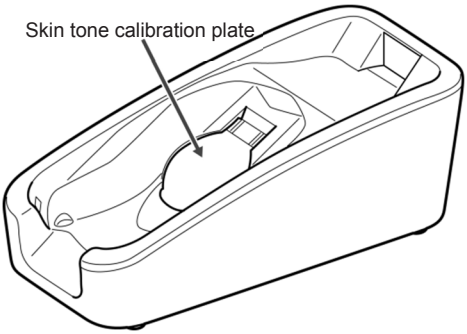

(Back)

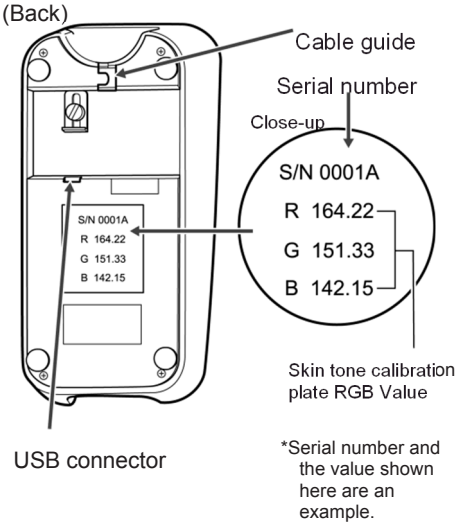

(With Skin tone calibration plate cover open)

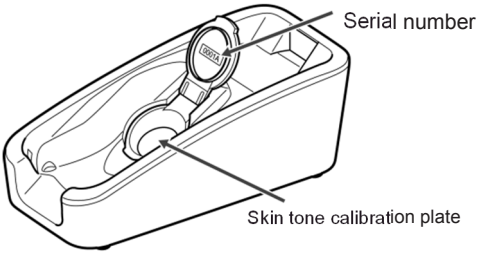

(Seen from the top)

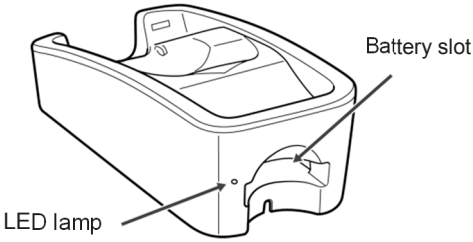

1. Components

USB cable, miscellaneous

- AC adapter (for Sensor stand)

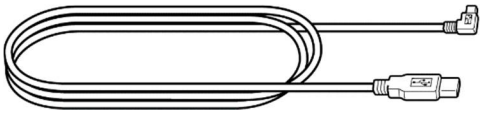

Ⓐ Connector for Sensor stand

Ⓑ Connector for AC adopter

*Use when you connect the cable to Sensor stand.

- AC – USB adopter

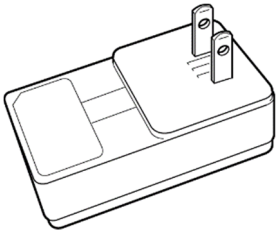

- USB cable (for Sensor, with a bushing)

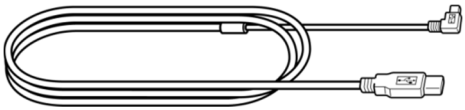

Ⓐ Connector for Sensor

Ⓑ Connector for the designated device

*Use when you connect Sensor to the designated device. Contact Support Center before use.

- Rechargeable battery (2 pcs)

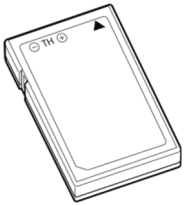

Insert each battery to Sensor and Sensor stand.

- Locking screw

- Connector stopper

Locking screw and Connector stopper are attached to Sensor stand.

*Do not lose any parts including the packaging box.

2. Setting up (Sensor stand)

1. Connect AC adapter (for Sensor stand) to Sensor stand.

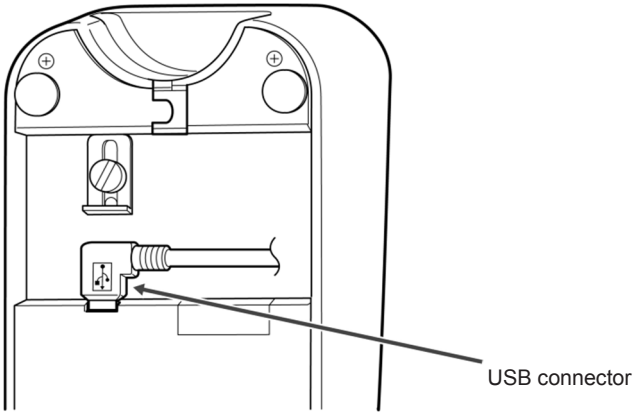

2. Loosen Locking screw, secure USB connector with Connector stopper, and then tighten Locking screw.

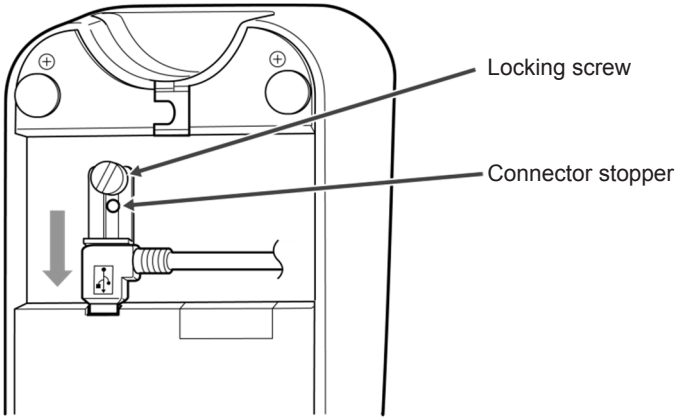

2. Setting up (Sensor stand)

3. Insert the cable on AC adapter (for Sensor stand) through Cable guide.
   *Handle with care and do not damage the cable.

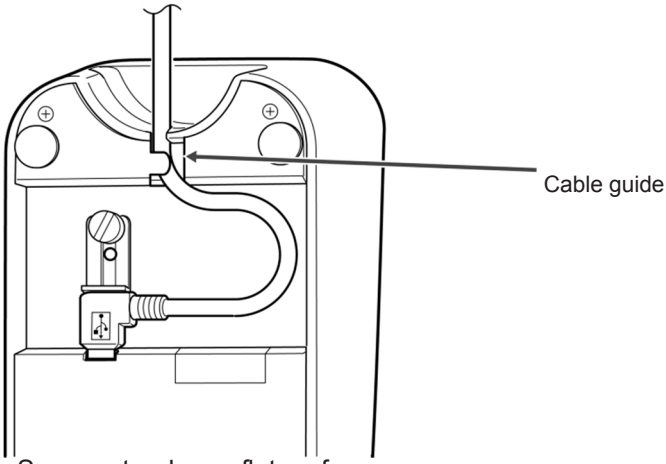

4. Place Sensor stand on a flat surface.
   Plug AC adapter into an electrical outlet.

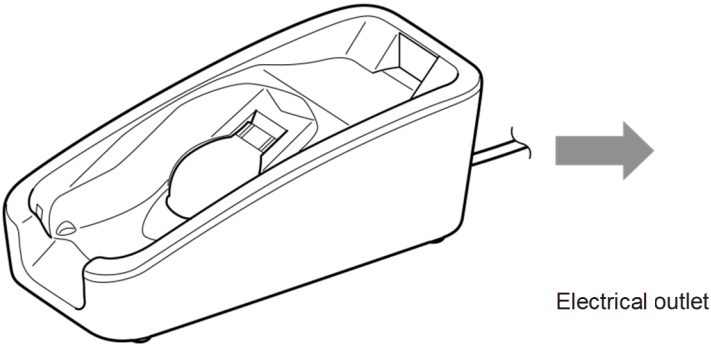

⚠ Caution

Only use included AC adopter (for Sensor stand). Using other AC adopters may result in damage and malfunction of Sensor and Sensor stand.

3. Charging Sensor

1. Slide Sensor in from the top of Sensor stand to place it properly.

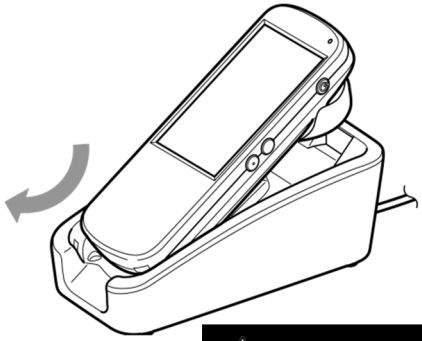

⚠ Caution

Sensor will not charge if it is placed in a wrong direction or not set in place properly.

2. Sensor stand will charge the battery inside Sensor.

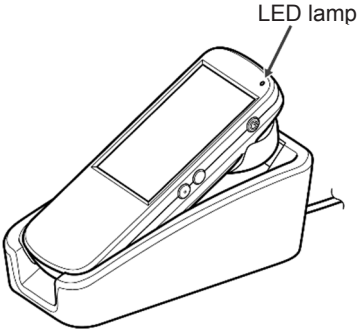

LED lamp indication		
Charging	—	LED lamp on Sensor turns red.
▼		
Fully charged	—	LED lamp on Sensor turns green.

⚠ Caution

If you place Sensor on Sensor stand while it is turned off, it will still charge but LED lamp will not turn on.

4. Charging Rechargeable battery

1. Insert Rechargeable battery into Sensor stand in the correct direction.

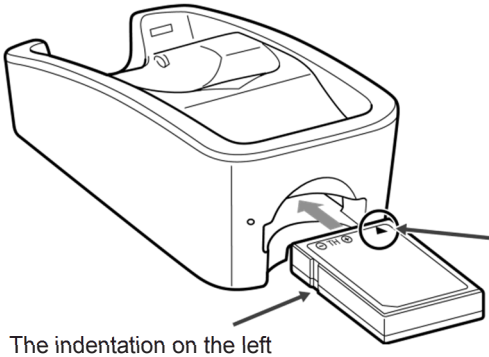

⚠ Caution

It will not charge if it is inserted in a wrong direction.

2. Sensor stand will charge it.

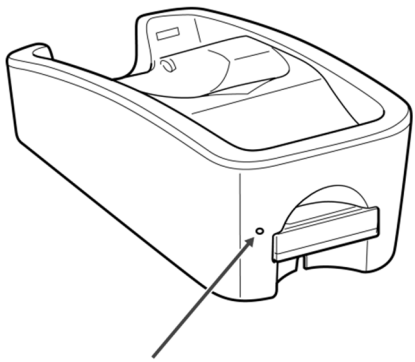

LED lamp indication

Charging	–	LED lamp on Sensor stand turns red.
▼		
Fully charged	–	LED lamp on Sensor stand turns green.

⚠ Caution

If Sensor is on Sensor stand at the same time, it will charge Sensor but not the inserted Rechargeable battery. LED lamp on Sensor stand will blink in green.

5. Changing Rechargeable battery (Sensor)

⚠ Warning

Never use Rechargeable battery if it is inflated.
It may cause overheating, fire or explosion.

1. Remove Battery compartment cover.

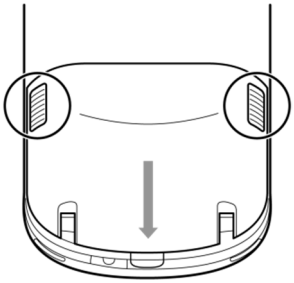

Push the corners of Battery compartment cover with your fingers and slide until a gap opens at the bottom.

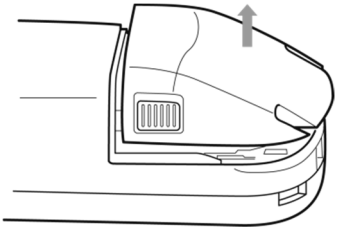

Lift Battery compartment cover to open.

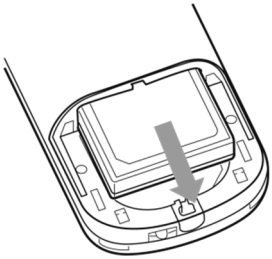

Remove Rechargeable battery.

⚠ Caution

Turn off the power when removing the Battery compartment cover.

5. Changing rechargeable battery (Sensor)

2. Insert fully charged Rechargeable battery.

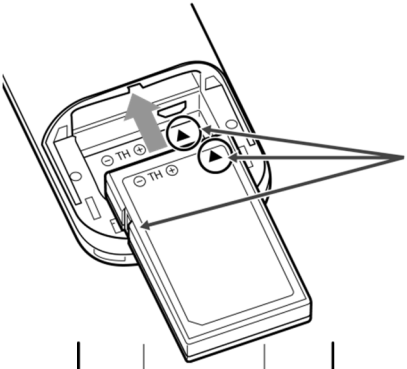

Be sure to insert rechargeable battery to the battery compartment with triangle mark on battery matches to the same mark in the housing as shown.
Also, you may find slotted groove on the left side on the battery.

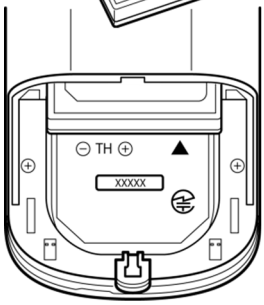

Fully insert Rechargeable battery.

3. Close Battery compartment cover.

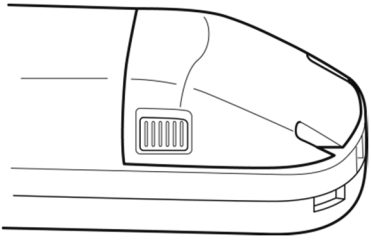

Follow the direction 1 in reverse order and close tightly.

⚠ Caution

Assembly which is not specified in this chapter may cause damage or malfunction of the products.

◆ Troubleshooting

Sensor	
Symptom	Solution
It does not turn on.	Check ・Is Rechargeable battery correctly inserted to Sensor? ・Is it charged? Solution ・Change to charged Rechargeable battery. ・When you turn it on, press down on Power switch for 2-3 seconds. The Handy Skin Sensor logo will appear.
When it turns on, the skin tone calibration screen appears.	Solution ・When you first turn it on for the day, the skin tone calibration screen appears. After the second time, the top page will appear.
It stopped working during operation. (The screen froze.)	Solution ・Turn it off, and turn it back on again. *If it does not turn off, remove Rechargeable battery.
The screen display does not look right.	Solution ・Turn it off, and turn it back on again. *If it does not turn off, remove Rechargeable battery.
The screen is blank/ the display disappeared.	Check ・If the unit is left unused for a while, it automatically goes into standby and turns off the screen. Is LED lamp blinking in white (standby mode)? Solution ・Press Power switch on Sensor to check if the screen comes back on. ・Turn it off, and turn it back on again. *If it does not turn off, remove Rechargeable battery.

◆ Troubleshooting

Sensor	
Symptom	Solution
The display is dark.	Check ・Is the brightness of the screen set too low? ・Is there a strong source of light nearby? Solution ・Change the brightness. (For instructions on how to change the setup, refer to Counter Utilization Manual.) ・Try using away from the strong source of light.
I cannot turn it off.	Solution ・Press down on Power switch for 5 seconds. *If it does not turn off, remove Rechargeable battery.
I cannot change the mode with Mode select button.	Solution ・Turn it off, and turn it back on again. *If it does not turn off, remove Rechargeable battery. *Mode select button only works on the enlarged shooting screen.
Sensor is on Sensor stand but it is not charging.	Check ・If you are using a power strip, is it plugged into an electrical outlet properly? ・Is AC adapter connected to Sensor stand and an electrical outlet properly? ・Is Sensor placed on Sensor stand properly? ・Is Rechargeable battery inserted properly in Sensor? Solution *If Battery compartment cover is off, Sensor will not charge. *LED lamp turns red when Sensor is charging.

◆ Troubleshooting

Sensor	
Symptom	Solution
The result value of Skin Tone analysis is displayed on an extreme position like corners of the screen.	Check ・Do the serial number for Sensor and the serial number for Sensor stand match? Solution ・Make sure to pair Sensor and Sensor stand by the serial number and calibrate skin tone from the setup screen. (To find the serial number, refer to p7-8 of this manual.)
LED lamp on Sensor is flashing in red.	Solution ・There is a problem with recharging (overloaded current, overheating). Stop use immediately. Remove Sensor from Sensor stand and unplug AC adopter from an electrical outlet. Contact Support center.

Sensor stand	
Symptom	Solution
LED lamp on Sensor stand is flashing in red.	Solution ・There is a problem with recharging (overloaded current, overheating). Stop use immediately. Remove Sensor from Sensor stand and unplug AC adopter from an electrical outlet. Contact Support center.

◆ USB connection with the designated device

1. To connect the designated device, use USB cable (for Sensor, with a bushing).
2. Remove Battery compartment cover, and remove Rechargeable battery and Cable hole cover.

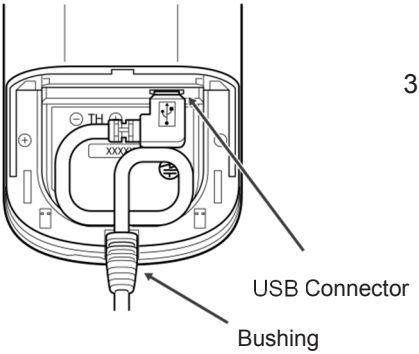

3. Connect the correct end of USB cable (for Sensor, with a bushing). As illustrated, circle once inside the compartment and securely place the bushing.

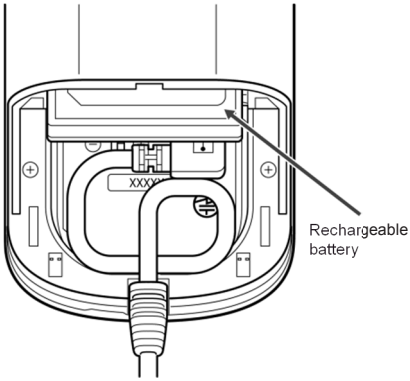

4. Fully insert Rechargeable battery back in place, and close Battery compartment cover.

⚠ Caution

Rechargeable battery must be inserted to connect.

5. Connect the other end of USB connector to the designated device.

⚠ Caution

Turn off the power when removing the Battery compartment cover.

◆ Specifications

Sensor		
Measure mode	Texture / Polarized / Skin Tone	
Screen size	Approx. 43 times (With 14-inch monitor)	
CMOS Camera	Imaging element	¼ inch CMOS camera sensor
	Pixel size	5.55 × 5.55 μ m
	Pixel count	640 (H) × 480 (V) pixel
Optical lens	Element	3 group/ 4 element
	F value	8.0
	Optical magnification	0.58x
Lighting	Lamp type	Super Luminosity White LED/DIP implementation
	Texture mode	8 lights / Lamp type
	Polarized mode	8 lights / Lamp type
	Skin tone mode	8 lights / Lamp type
OS	Android 5.1.1	
CPU	ARM Cortex A9 Dual 1GHz	
Memory	Main storage capacity	1GB DDR3
	Internal memory	Micro SD 8GB (Micro SD slot Primary)
LCD	Screen size	4.0”TFT LCD
	Resolution	480 × 800
	Displayable colors	260,000
Touch panel	Capacitive	
Wireless LAN	Correspondence standards	IEEE802.11a, b, g, n (2.4 / 5GHz)
	Security	WEP, WPA2/AES
	Access method	Infrastructure Wireless LAN access point (2.4GHz)
External interface	USB (Micro-B type) 2-port	
	microSD	
Power consumption	Approx. 2W	
Power source	Lithium-ion rechargeable battery *Capacity3120mAh (Included)	
Battery life (When fully charged)	Full operation (Connected to wireless LAN, with lights on, and shooting)	Approx. 70 minutes
	Standby (Not connected to wireless LAN, with lights off)	Approx. 6 hours
LED lamp indication	LED off	Power OFF
	Red	Charging
	Green	Power on
	White	Standby (Power ON/Charging/Abnormal)
	Blinking in red	Abnormal (Overloaded current/Overheating)
Weight	Approx. 200g (without battery)	
Dimensions	Approx. 64 (W) × 171 (H) × 58.6 (D) mm	

◆ Specifications

Sensor stand		
LED lamp indication	LED off	Not connected to power
	Red	Charging the battery in Sensor stand
	Green	Connected to power
	Blinking in green	Charging Sensor
	Blinking in red	Abnormal (Overloaded current/Overheating)
Power source	Via AC adapter	
Weight	Approx. 330g (without AC adapter or cable)	
Dimensions	Approx. 82 (W) × 62 (H) × 176 (D) mm	

AC adopter (for Sensor stand)	
Connector	Ⓐ For an electrical outlet: plug Ⓑ For sensor: Micro B type
Length	1.5m
Input voltage	100-240V
Output voltage	5VDC
Output current	1.8A
Weight	Approx. 69g
Dimensions	Approx. 51 (W) × 19 (H) × 48 (D) mm

USB cable				
For Sensor, with a bushing	A type ⇔ Micro B	1m	Ⓐ For Sensor: Micro B type	Ⓑ For PC: A type

Rechargeable battery (Lithium-ion rechargeable battery)	
Capacity	3120mAh (70 minutes in full operation)
Weight	60g
Dimensions	Approx. 43 (W) × 69 (H) × 12 (D) mm
Charge time	Less than 4 hours (Empty → Full charge)

◆ Specifications

Equipment Name: Handy Skin Sensor Ⅱ
Model Name: HSSⅡ

U.S.A
FCC ID: 2AO35-HSS2

Canada
IC: 23766-HSS2