Handy Skin Sensor 3

Instruction Manual

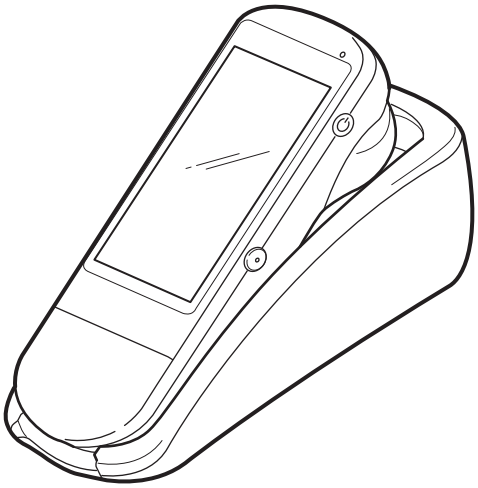

SHISEIDO

Table of Contents

◆ Safety Precautions ...2
◆ Precautions for Use/Maintenance ...5
◆ FCC/ISED Compliment statement ...8
1. Device Configuration ...10
2. Installation Preparations (Stand) ...13
3. Charging the Sensor Unit ...15
4. Startup Procedure ...17
5. Shutdown Procedure ...18
6. Forced Shutdown Procedure ...18
7. Using a Wired Connection ...19
8. Rechargeable Battery Replacement ...20
9. Coin Battery Replacement ...23
◆ Troubleshooting ...25
◆ Specifications ...28
◆ Certification standard ...30

Read this manual carefully to ensure that you use the product correctly. It contains important information regarding the safe use of the product.

◆ Safety Precautions

This section describes precautions for using this product safely and correctly in order to prevent damage to property and prevent harm to yourself and others. The manufacturer or seller will not be held responsible for any bodily injury or accidental damage caused by misuse or inappropriate operation of the product.
Before reading the rest of this manual, read the following descriptions to gain an adequate understanding of the precautions used in this manual.
Store this Handy Skin Sensor 3 Instruction Manual in a safe place where you can refer to it at any time.

⚠ WARNING	Indicates information regarding death or serious injury that may occur if the product is mishandled.

- Do not wet the product with water or use it with wet hands. Doing so may cause product failure or electrocution.
- Do not allow the light from the product to enter your eyes. Doing so may damage your eyesight or cause blindness.
- Do not disassemble, repair, or modify the product. Doing so may cause an accident, fire, or electrocution.
- Do not place the product in a location subject to direct sunlight or a location subject to high temperatures, such as near a heater, inside an automobile, or near open flame. Doing so may cause the internal temperature to rise and cause a fire.
- Do not place the product in a dusty or sooty location, a location subject to high humidity, or a location where the product may be exposed to water or chemicals. Dust, soot, humidity, water, or chemicals entering the product may cause the product to emit smoke or catch fire.
- If the product is exposed to water, foreign material enters the product, or the product emits heat, smoke, or an abnormal smell, immediately stop use, and remove the rechargeable battery from the sensor unit. Otherwise, an accident, fire, or electrocution may occur.
- If you hear thunder, remove the AC adapter from the power outlet. Do not touch the metallic parts of the product or the rechargeable battery. Lightning may cause electrocution.
- Do not use an AC adapter other than that included with the product. Doing so may cause the product to fail or catch fire.
- Do not use the included AC adapter with another product. Doing so may cause the other product to fail or catch fire.

◆ Safety Precautions

- If the LED (bottom left) of the sensor unit flashes red when the sensor unit is connected to the AC adapter or another terminal, immediately remove the USB cable from the sensor unit. Otherwise, the product may emit smoke or catch fire.
- Do not use the product while the LED of the sensor unit (bottom left) is flashing red. Connecting the USB cable to another terminal in the above state may damage the other terminal or cause it to catch fire.
- Always use the product with the included rechargeable battery attached. Otherwise the product may not operate normally.
- Only use the dedicated rechargeable battery and make sure to insert it with the correct orientation. Otherwise, heat, fire, or product failure may occur.
- Do not orient the lens to the sun or another strong source of light. The concentration of the light may damage the sensor unit and cause a fire.
- Do not use the product near high-precision control devices or electronic devices that handle weak signals. Doing so may cause electronic devices (such as medical devices on the body) to malfunction.

⚠ CAUTION	Indicates information regarding bodily injury or physical damage that may occur if the product is mishandled.

- Do not use the product on skin which is damaged, rough, pimply, or blistered. Doing so may aggravate the skin condition.
- Do not insert the sensor unit into the eyes, nostrils, or mouth.
- Do not push the screen of the product forcefully or subject it to strong impacts. Doing so may damage the LCD screen.
- If the screen of the product is damaged and the LCD screen is cracked, do not touch the cracked glass with your hands. Doing so may cut your fingers.

◆ Safety Precautions

- If the screen of the product is damaged and the liquid crystal leaks, do not touch the liquid crystal. If liquid crystal gets on your skin or clothing, immediately wash it off with clean water. Otherwise, your skin may develop a rash.
- If foreign material such as cosmetics is attached to the tip of the sensor unit, wipe it away clean before measurement. Otherwise, your skin may develop a rash or you may contract an infectious disease.
- Do not use the product if the tip of the sensor unit is damaged. Doing so may damage your skin.
- Do not press the tip of the sensor unit against your skin forcefully or move the tip while it is pressed against your skin. Doing so may cause skin congestion or injury.
- Do not insert your fingers or objects such as wire into the gaps or holes around the product. Doing so may cause injury, electrocution, or product failure.
- If a component such as the rubber feet attached to the base of the stand falls off, do not place it in your mouth.
- Do not use or store the product in a place accessible by small children or pets. Doing so may cause injury.
- Do not install the product in an unstable location. The product may fall and cause unexpected injury.
- When carrying the sensor unit and stand together, be careful not to drop them. Doing so may damage the devices or cause injury such as laceration if the devices fall on your feet.
- Take care when handling the packaging box and instruction manuals. The edges of the cardboard and paper may cause injury.
- Do not use the product in locations containing measuring instruments, such as an airplane or hospital. Electromagnetic waves emitted by the product may affect the instruments.

◆ Precautions for Use

- This product is a precision device. Do not drop it or subject it to strong impacts. Doing so may cause product failure.
- Do not touch the gold metallic parts of the product. Electrostatic may cause the product to malfunction or contact failure may prevent charging.
- Do not use the product for purposes other than measuring skin.
- Do not use the product in dusty or dirty locations. Dust or other foreign material entering the tip of the sensor unit may cause product failure.
- The temperature of the sensor unit may rise when the product is used for an extended period of time, but this does not affect product performance or quality. If you feel that the sensor unit is so hot that it cannot be touched, the product may have failed. Immediately stop using the product and remove the rechargeable battery.
- When you will not use the product for an extended period of time, remove the rechargeable battery from the sensor unit. Otherwise, the battery fluid may leak or contact failure may occur.
- The rechargeable battery may self-discharge if the product is not used for an extended period of time. In this case, charge the rechargeable battery again before use.
- Condensation may occur if the surrounding temperature of the product changes rapidly. Do not use the product with condensation, as it may cause product failure. Leave the product for some time and confirm that it is dry before using it again.
- Do not use devices such as mobile phones or microwave therapy equipment near the product. Otherwise, accurate measurement may not be possible.
- When attaching a strap to the product, use the dedicated strap.
- If foreign material such as cosmetics is attached to the tip of the sensor unit, swiftly wipe it away clean. Otherwise, the tip may become discolored or deformed.

◆ Maintenance

- Turn the power of the sensor unit off and remove the rechargeable battery.
- Clean the LCD screen using a dry microfiber cleaning cloth.
- When using disinfecting alcohol, apply a small amount to a microfiber cleaning cloth.
- Do not use solvents such as anhydrous ethanol, benzine, or thinner on a microfiber cleaning cloth.
- Do not clean the camera internals visible from the sensor tip.
  Doing so may damage the light or lens and cause product failure.

◆ Wireless LAN (IEEE802.11a, IEEE802.11b, IEEE802.11g, IEEE802.11n, IEEE802.11ac)

- Radio equipment using the 2.4 GHz band indicated above use the full band and can avoid the band used by mobile identification devices. They use the DSSS and OFDM modulation methods, and have an interference distance of 40 m.
- The frequency band used by this product is shared by industrial, scientific, and medical devices such as microwave ovens, as well as on-premise radio stations for mobile identification (radio stations requiring a license) or designated low-power radio stations (radio stations not requiring a license) used in locations such as manufacturing lines at factories.
  (1) Before using this product, confirm that no on-premise radio stations for mobile identification or designated low-power radio stations are operating nearby.
  (2) If electromagnetic interference is caused to an on-premise radio station for mobile identification by this product, swiftly change the location where the product is used, or stop using the product to cease the emission of electromagnetic waves.
- Due to the nature of wireless LAN, the communication distance depends on environmental factors such as the building structure and materials, obstacles, software, installation status, and reception. The communication speed may also decrease or communication may become impossible.

◆ 5 GHz Band Channels

- The wireless LAN function of this product supports the 5 GHz band. The Radio Act prohibits the outdoor use of the 5.2 GHz band and 5.3 GHz band. This product uses the following channels.
  - W52 (5.2 GHz band; channels 36, 38, 40, 42, 44, 46, and 48)
  - W53 (5.3 GHz band; channels 52, 54, 56, 58, 60, 62, and 64)
  - W56 (5.6 GHz band; channels 100, 102, 104, 106, 108, 110, 112, 116, 118, 120, 122, 124, 126, 128, 132, 134, 136, and 140)

◆ Directive on Waste Electrical and Electronic Equipment [WEEE] (2012/19/EU)

- This product shall be compliant with WEEE marking requirements (2012/19/EU).
  Hereinafter, the CE marking indicates that this electronic equipment shall not be waste as household waste.
  manufacturer is compliant with all applicable legal requirements of the EU "New Approach Directives" and European Regulations.
  Please dispose according to local standards.
  Make sure the electronic equipment waste should not be disposed of in the regular trash as household waste.

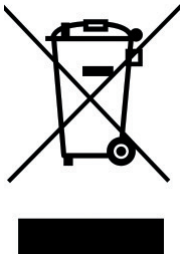

- Since the internal batteries of HSS3 products cannot be replaced, when they are disposed of, they are collected and disassembled in accordance with the WEEE directive. Then, the batteries shall be recycled based on the WEEE directive.
  Thus, when the HSS3 products are disposed of within EU, Please dispose according to local standards.

◆ FCC/ISED Compliment statement

- Note : This equipment has been tested and found to comply with the limits for a Class B digital device, pursuant to part 15 of the FCC Rules. These limits are designed to provide reasonable protection against harmful interference in a residential installation. This equipment generates, uses and can radiate radio frequency energy and, if not installed and used in accordance with the instructions, may cause harmful interference to radio communications. However, there is no guarantee that interference will not occur in a particular installation. If this equipment does cause harmful interference to radio or television reception, which can be determined by turning the equipment off and on, the user is encouraged to try to correct the interference by one or more of the following measures:

  – Reorient or relocate the receiving antenna.

  – Increase the separation between the equipment and receiver.

  – Connect the equipment into an outlet on a circuit different from that to which the receiver is connected.

  – Consult the dealer or an experienced radio/TV technician for help.

  Cet équipement a été testé et trouvé conforme aux limites pour un appareil numérique de Classe B, conformément à la partie 15 des règles FCC. Ces limites sont conçues pour fournir une protection raisonnable contre les interférences nuisibles dans une installation résidentielle. Cet équipement génère, utilise et peut émettre une énergie de fréquence radio et, s'il n'est pas installé et utilisé conformément aux instructions, peut causer des interférences nuisibles aux communications radio. Cependant, il n'y a aucune garantie que des interférences ne se produiront pas dans une installation particulière. Si cet équipement provoque des interferences nuisibles à la réception radio ou télévision, ce qui peut être déterminé en éteignant l'équipement, l'utilisateur est encouragé à essayer de corriger les interférences en prenant une ou plusieurs des mesures suivantes :

  – Réorientez ou déplacez l'antenne de réception.

  – Augmenter la distance entre l'équipement et le récepteur.

  – Connecter l'équipement à une prise sur un circuit différent de celui auquel le récepteur est connecté.

  – Consulter le revendeur ou un technicien radio/télévision expérimenté.

◆ FCC/ISED Compliment statement

- Operation is subject to the following two conditions: (1) this device may not cause interference, and (2) this device must accept any interference, including interference that may cause undesired operation of the device.

  L'opération est soumise aux deux conditions suivantes: (1) cet appareil ne doit pas causer d'interférences, et (2) cet appareil doit accepter toute interférence, y compris les interférences pouvant entraîner un fonctionnement indésirable de l'appareil.

- RF exposure compliance
  This transmitter must not be co-located or operating in conjunction with any other antenna or transmitter.

  Cet émetteur ne doit pas être localisé ou fonctionner avec toute autre antenne ou émetteur.

⚠ CAUTION

Any changes or modifications not expressly approved by the party responsible for compliance could void the user's authority to operate the equipment.

Les changements ou modifications non expressément approuvés par la partie responsable de la conformité pourrait annuler l'autorisation d'utilisation de l'équipement.

1. Device Configuration

Sensor Unit

●Sensor unit (front)

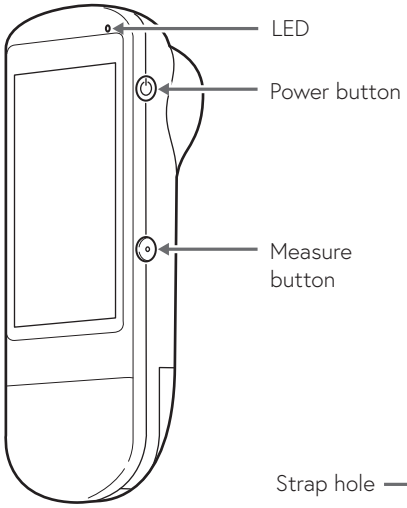

●Sensor unit (back)

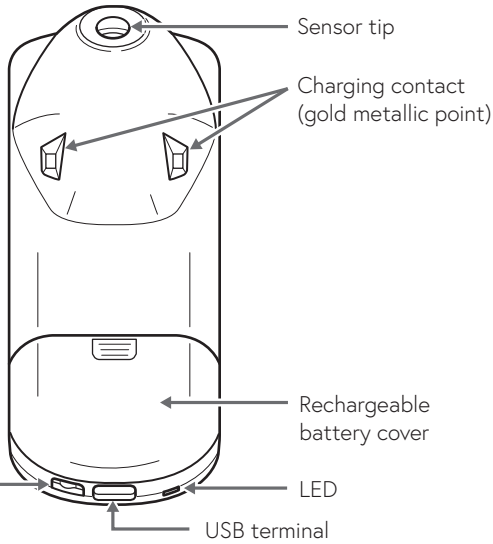

●With rechargeable battery cover removed (enlarged view)

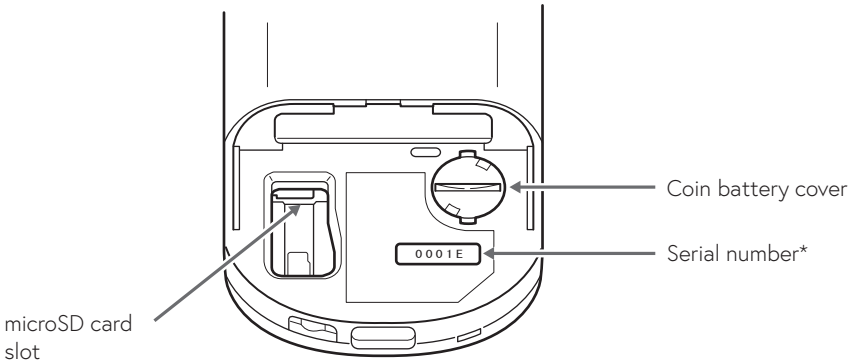

*The serial number is also indicated on the back of the stand and the underside of the skin color calibration plate cover.

1. Device Configuration

Stand

●Stand (front)

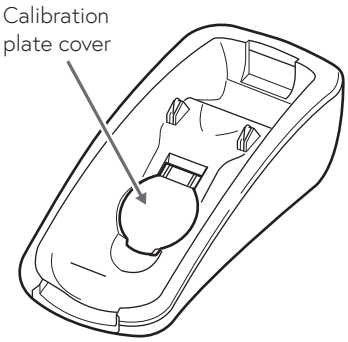

●Stand (back)

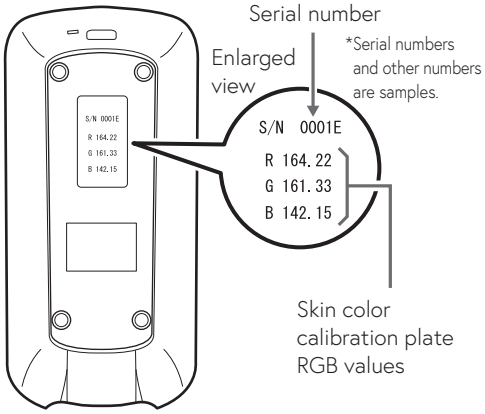

●With calibration plate cover opened

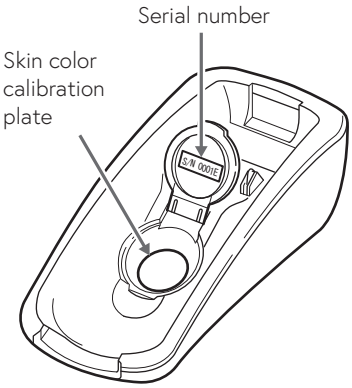

●Stand (rear)

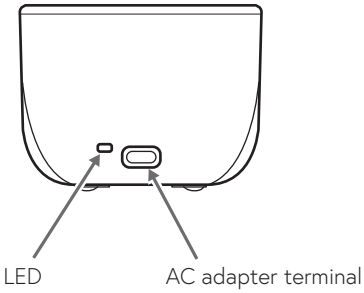

1. Device Configuration

AC adapter and Rechargeable battery

●AC adapter

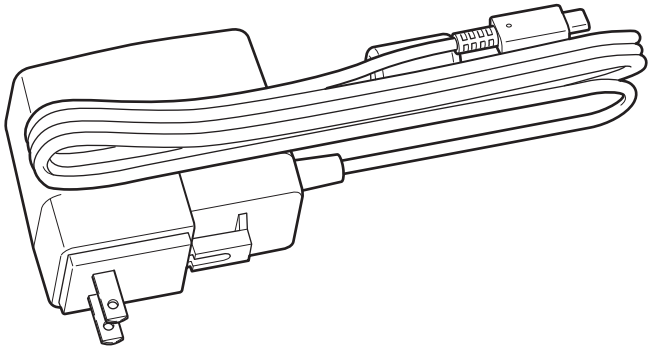

●Rechargeable battery

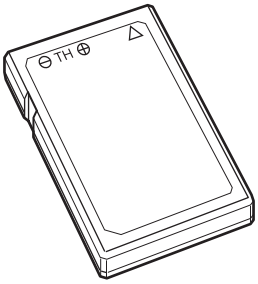

2. Installation Preparations (Stand)

1. Place the stand on a flat surface and connect the USB Type-C connector. Securely hold the base of the USB Type-C connector and insert it into the stand.

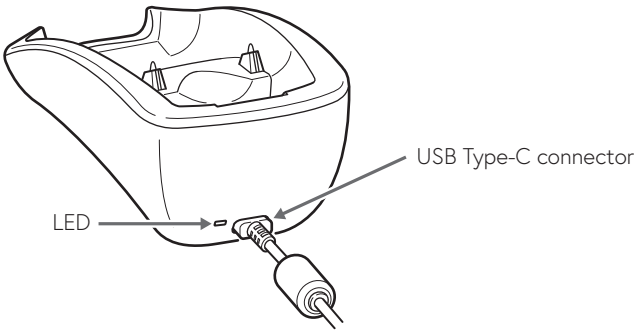

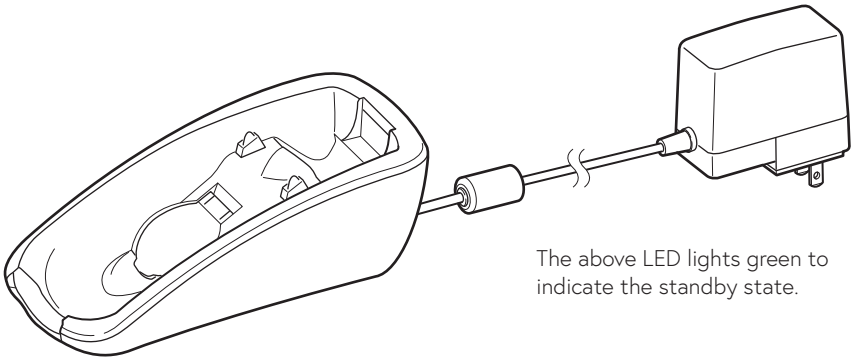

⚠ CAUTION

When installing the stand, be careful that the USB cable does not get caught on a drawer or other object.

2. Installation Preparations (Stand)

2. Insert the AC adapter into a power outlet or power strip.

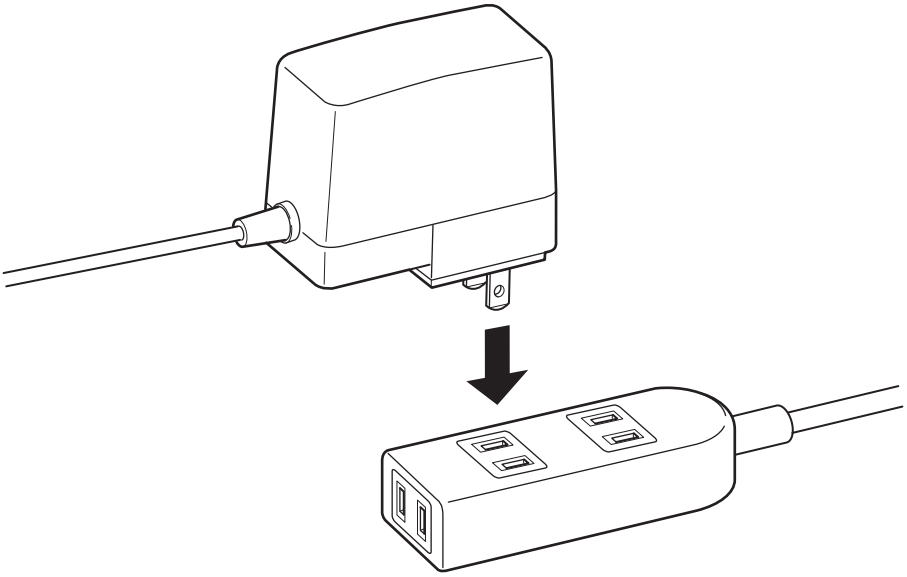

⚠ CAUTION

Make sure to use the included AC adapter.
Using items other than the included accessories may cause sensor unit or stand failure.
Place the USB cable in a location where it will not get caught by your legs or other objects. Otherwise, you may fall and injure yourself or damage the product and cause it to emit heat or catch fire.

3. Charging the Sensor Unit

1. Place the sensor unit on the stand correctly, ensuring that it is not loose or misaligned.

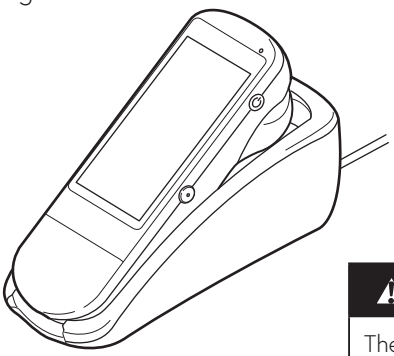

⚠ CAUTION

The sensor unit will not charge if it is placed on the stand backwards or in a position where it is loose.

2. The charging function of the stand charges the rechargeable battery inside the sensor unit.

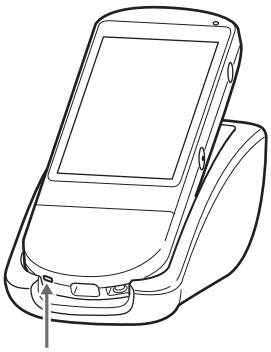

Sensor Unit Charging Operations and LED States (Bottom Left)		
•Charging	-	LED lights red
↓		
•Charging complete	-	LED lights green
•No power from stand/USB	-	LED turns off
•Charging error	-	LED flashes red

3. Charging the Sensor Unit

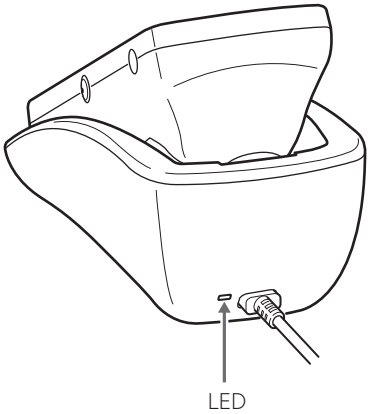

Status Indication of Stand LED		
•Standby (sensor unit not placed on stand)	-	LED lights green
↓ Place sensor unit on stand		
•Powering sensor unit	-	LED lights red
•Power input error (overvoltage/low voltage error) •Power supply error (overcurrent error)	-	LED flashes red
•Power input error (non-specified AC adapter detected)	-	LED flashes green
•No power	-	LED turns off

4. Startup Procedure

1. Press and hold the power button until the LED turns on, then remove your finger from the power button.

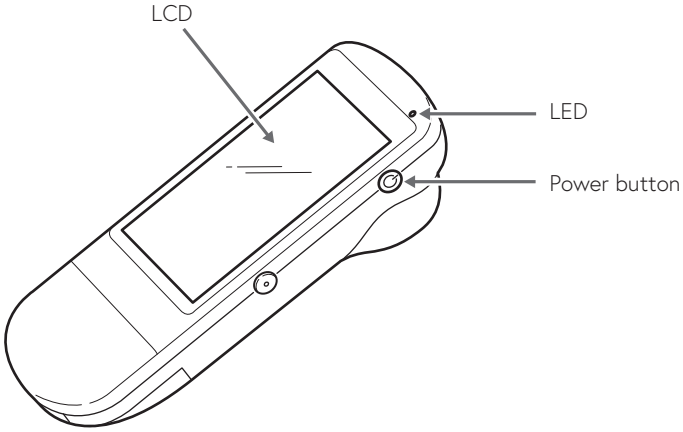

2. A buzzer sounds when the LED turns on, then "Handy Skin Sensor" is displayed on the LCD after a short time, and the HSS3 application starts.

⚠ CAUTION

If startup is not possible, the rechargeable battery may have insufficient power.
Place the sensor unit on the stand to charge the battery.

5. Shutdown Procedure

1. Press and hold the power button for two seconds or longer. When the message "Shutting down..." is displayed on the LCD, release the power button. The sensor unit automatically shuts down and the LED and LCD turn off.

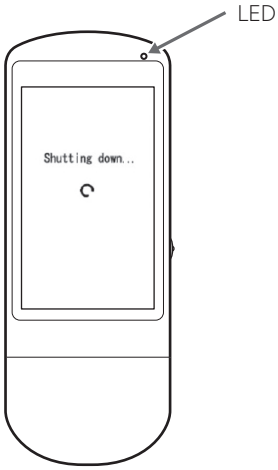

⚠ CAUTION

Do not remove the rechargeable battery while the LED is on. Doing so may damage the Android system and prevent startup.

6. Forced Shutdown Procedure

1. If the HSS3 application freezes, press and hold the power button for approximately 10 seconds. The LED and LCD turn off.

⚠ CAUTION

Removing the rechargeable battery to turn the power off without performing the emergency shutdown procedure may damage the Android system and prevent startup.

7. Using a Wired Connection

1. To perform USB communication with a PC or tablet, use a USB cable* for wired connection.
2. Securely hold the base of the USB connector and insert the ferrite core side of the USB cable for wired connection* into the USB terminal on the bottom of the sensor unit.

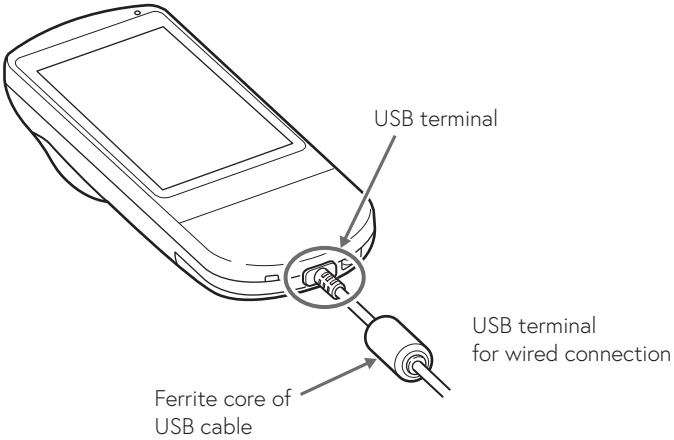

3. Connect the PC or tablet side connector of the dedicated device USB cable* into the terminal of the PC or tablet.
   *The USB cable for wired connection is optional and must be prepared separately.

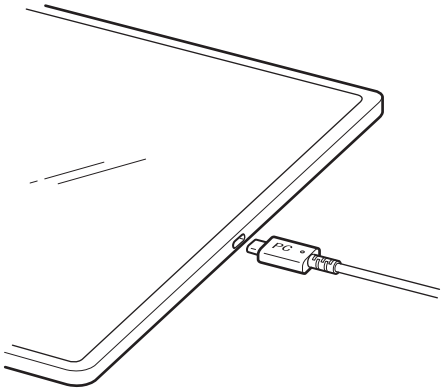

8. Rechargeable Battery Replacement

⚠ WARNING

When replacing the rechargeable battery, never use a swollen rechargeable battery. Doing so may generate heat or cause the battery to burst or catch fire.

◆ Precautions When Removing the Rechargeable Battery

This section describes precautions for using this product safely and correctly in order to prevent damage to property and prevent harm to yourself and others. The manufacturer or seller will not be held responsible for any bodily injury or accidental damage caused by misuse or inappropriate operation of the product. Before using this product, read the following descriptions to gain an adequate understanding of the precautions.

⚠ CAUTION

Do not insert or remove the rechargeable battery while a USB cable is connected to the sensor unit. Doing so may cause product malfunction or failure.

If the rechargeable battery has been removed, do not place the sensor unit on the stand or connect the sensor unit by USB cable. Doing so may cause product malfunction or failure.

8. Rechargeable Battery Replacement

1. Remove the rechargeable battery cover.

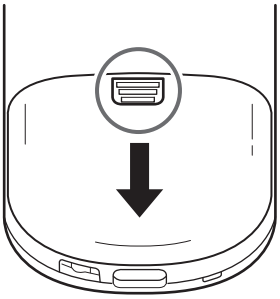

Push the center of the rechargeable battery cover with your finger, and slide it down until a small gap opens.

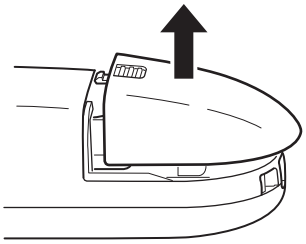

Lift up and remove the rechargeable battery cover.

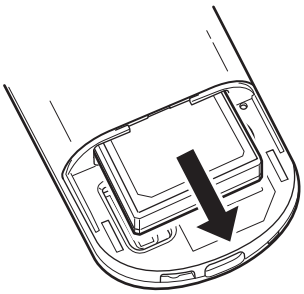

Remove the rechargeable battery that is inserted.

8. Rechargeable Battery Replacement

2. Insert the new rechargeable battery.

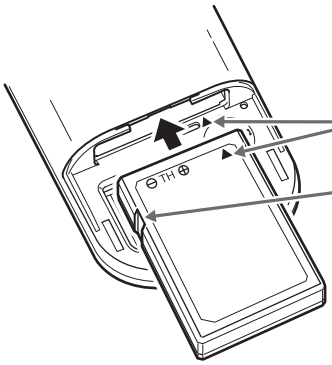

With the side featuring Japanese text facing upward, align the triangular mark on the rechargeable battery with that inside the sensor unit, confirm that the notch of the battery is on the left side, and insert the battery.

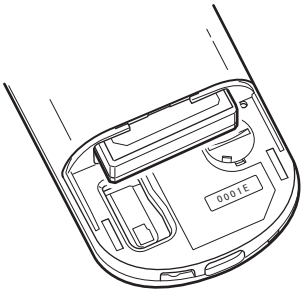

Insert the rechargeable battery in all the way.

3. Attach the rechargeable battery cover.

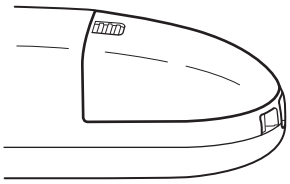

Attach the cover securely in the reverse order of the procedure for removing it.

⚠ CAUTION

Use the included rechargeable battery.
Using other batteries may cause product malfunction or failure.

9. Coin Battery Replacement

1. Remove the coin battery cover with the rechargeable battery cover and rechargeable battery removed.

Place a coin in the groove of the coin battery cover, and turn it 35 degrees counterclockwise.

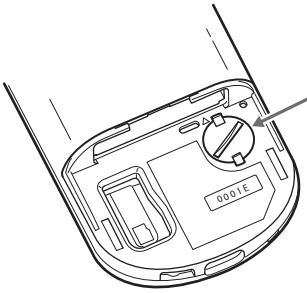

The coin battery cover is unlocked and can be removed.

2. Remove the coin battery.

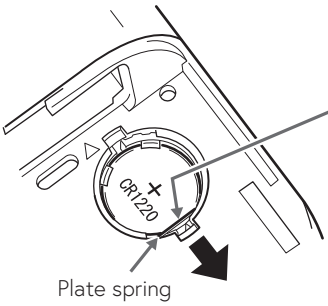

Slide the plate spring holding the coin battery with your finger in the direction indicated by the arrow. When the plate spring is disengaged and the coin battery pops up, turn the sensor unit upside-down and remove the coin battery.

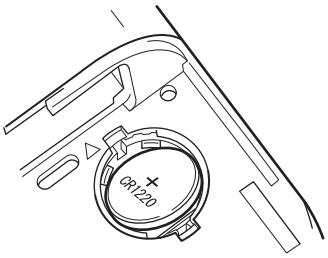

⚠ CAUTION

When removing the coin battery, do not prise it out using a rod or other object.
Doing so may cause product malfunction or failure.

9. Coin Battery Replacement

3. Insert the new coin battery.

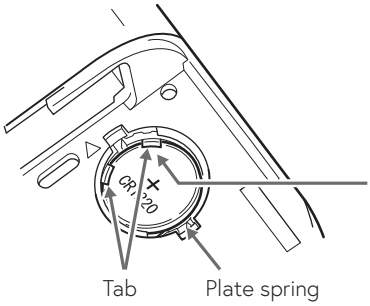

Insert a new coin battery below the tab, with the battery type visible.
After inserting the battery, push down from above on the plate spring side.

⚠ CAUTION

Use a new coin battery. A CR1220 type battery is required.

4. Attach the coin battery cover.
   Attach the cover securely in the reverse order of the procedure for removing it.

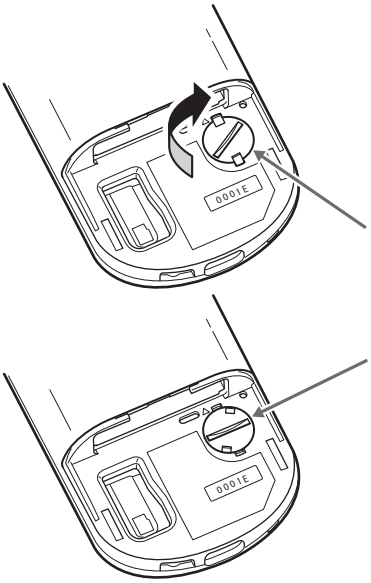

Place a coin in the groove of the coin battery cover, and turn it 35 degrees clockwise.

The coin battery cover is locked.

◆ Troubleshooting

Sensor Unit	
Symptom	Things to Check and Suggested Remedy
The power does not turn on.	Check ・Is the rechargeable battery securely inserted into the sensor unit with the correct orientation? ・Is the rechargeable battery charged? Remedy ・Insert the rechargeable battery with the correct orientation. ・Charge or replace the rechargeable battery. ・When turning the power on, press and hold the power button for two or three seconds. A buzzer sounds, then the "Handy Skin Sensor" logo is displayed on the LCD.
The skin color calibration screen is displayed when the power is turned on.	Remedy ・The skin color calibration screen is displayed the first time the product is started each day. The top screen is displayed from the second first time the product is started each day.
The power does not turn off.	Remedy ・Press and hold the power button for about 10 seconds. *If the power does not turn off, remove and reinsert the battery.
The screen is frozen and operations cannot be performed.	Remedy ・Press and hold the power button for about 10 seconds to turn the power off. Then turn the power on again. *If the power does not turn off, remove and reinsert the battery.
The screen display is corrupt.	
The mode switch button does not switch the mode.	Remedy ・Press the power button to turn the power off normally. Then turn the power on again. *If the power does not turn off, remove and reinsert the battery.

◆ Troubleshooting

Sensor Unit	
Symptom	Things to Check and Suggested Remedy
The display turned off.	Check ・Is the LED (top right) lit green? The product automatically enters the energy saving mode and turns the display off if no operations are performed for a certain amount of time. Remedy ・Press the power button of the sensor unit and confirm that the screen is displayed.
The screen is dark.	Check ・Is the brightness set too dark? ・Is the product close to a strong source of light? Remedy ・Change the brightness setting (see "Change Settings" in the Usage Manual). ・If the product is close to a strong source of light, change the location where you are operating the product.
The values of the skin color measurement results were placed in an extreme position, such as in the four corners of the screen.	Check ・Do the serial numbers on the sensor unit and stand match? Remedy ・Match the serial numbers of the sensor unit and stand (for information on the location of the serial number, see pages 10 and 11 of this manual), and perform skin color calibration on the management screen.
The sensor unit does not charge when it is placed on the stand.	Check ・When charging the sensor unit, is the LED (bottom left) lit red? Remedy ・Insert the rechargeable battery into the sensor unit correctly. ・Place the sensor unit onto the stand correctly. ・Confirm that the LED of the stand lights red. ・Connect the AC adapter to the stand and power outlet correctly. ・When using a commercial power strip, connect the power strip to the power outlet.

◆ Troubleshooting

Sensor Unit	
Symptom	Things to Check and Suggested Remedy
The LED of the sensor unit (bottom left) flashes red.	Remedy ・An error (overload current or temperature error) occurred during the charging process. Immediately stop use, remove the rechargeable battery from the sensor unit.
Communication is not possible with a wired connection to the dedicated device.	Check ・Are you using a USB cable for wired connection? Remedy ・Replace the cable you are currently using with a USB cable for wired connection. *The USB cable for wired connection is optional and must be prepared separately.

Stand	
Symptom	Things to Check and Suggested Remedy
The LED of the stand flashes red.	Remedy ・An error (overload current or temperature error) occurred during the power supply process. Immediately stop use, and remove the sensor unit from the stand. Remove the AC adapter connected to the stand from the power outlet.

◆ Specifications

Sensor Unit		
Measurement modes	Texture, blemish, horny layer, skin color modes	
Zoom	Approx. 43x (on 14 inch monitor)	
CMOS camera	Image sensor	1/2.7 inch CMOS camera sensor
	Pixel size	3.0 µm x 3.0 µm
	Valid pixel count (CMOS)	1928 (H) x 1088 (V)
	Displayed pixel count	640 (H) x 480 (V)
Optics (lens)	Configuration	4-group 4-lens
	F value	F9
Light	Format	High-brightness white LED
	Texture mode	8 shell type lights
	Blemish/horny layer modes	8 shell type lights
	Skin color mode	8 shell type lights
Operating system	Android 9	
CPU	Quad-core ARM Cortex-A17	
Memory	Memory (RAM)	2 GB LPDDR3
	Main storage capacity	8 GB eMMC
LCD	Screen size	4.0" TFT LCD
	Resolution	480 x 800
	Available display colors	167,000 colors
Touch panel	Capacitance type	
Wireless LAN	Supported standards	IEEE802.11a, b, g, n, ac (2.4/5 GHz)
	Security	WPA2
	Access method	Infrastructure mode Access point mode
External interfaces	USB (Type-C)	
	microSD	
Power consumption	12.5 W	
Power supply	Rechargeable lithium ion battery, included with product (3,120 mAh capacity)	
Operating hours (with full charge)	Full operation (imaging skin with wireless LAN enabled and the light on)	70 minutes
LED state (top right)	Startup/saving power	LED lights green
	Other	LED off
LED state (bottom left)	Charging	LED lights red
	Charging complete	LED lights green
	Error (overload current or temperature error)	LED flashes red
Weight	Approx. 210 g, excluding rechargeable battery	
Dimensions	Approx. 168 (H) x 64 (W) x 54 (D) mm	

◆ Specifications

Stand		
LED state	No power (power off)	LED off
	Powering sensor unit	LED lights red
	Power input error (overvoltage/low voltage error) Power supply error (overcurrent error)	LED flashes red
	Power input error (non-specified AC adapter detected)	LED flashes green
	Other cases with power	LED lights green
Power supply	Supplied from USB connector	
Weight	Approx. 235 g, excluding cable	
Dimensions	Approx. 168 (H) x 81 (W) x 62 (D) mm	

AC Adapter	
Model	ATS018T-W050V
Input voltage	AC 100-240 V
Output voltage	DC 5 V
Output current	3 A
Weight	Approx. 170 g
Dimensions	Approx. 84 (H) x 75 (W) x 35 (D) mm, including plug (for US plug)

Rechargeable battery (lithium ion battery)	
Capacity	3120 mAh
Weight	60 g
Dimensions	Approx. 43 (W) x 69 (H) x 12 (D) mm

Operating Environment	
Operating temperature	+5 to +35°C
Operating humidity	20 to 80% RH (without condensation)
Storage temperature	−25 to +55°C
Storage humidity	20 to 95% RH (without condensation)

CAUTION
Do not connect the USB Type-C cable of the included AC adapter to any USB device other than the dedicated device. Doing so may cause product failure.

◆ Certification standard

Equipment Name: Handy Skin Sensor 3
Model Name: HSS3

U.S.A
FCC ID:

Canada
ISED:

A10565B5000301A