casa systems

Apex Strand Small Cell

Installation Guide

Version 4.2.3

DOC-3077-01
Document Revision 1.04.00
December 2018

© 2018 Casa Systems, Inc.

All rights reserved. Licensed software products are owned by Casa Systems or its suppliers and are protected by United States copyright laws and international treaty provisions.

The information regarding the product in this manual is subject to change without notice. All statements, information, and recommendations in this manual are believed to be accurate but are presented without warranty of any kind, express of implied. Users must take full responsibility for their application of the product.

In no event shall Casa or its suppliers be liable for any indirect, special, consequential, or incidental damages, including, without limitation, lost profits or loss or damage to data arising out of the use or inability to use this manual, even if Casa or its suppliers have been advised of the possibility of such damages.

Contents

Preface

About this guide v
Safety information and symbols vi
Safety and Regulatory Agency Compliance ..... iii-vii
Product safety information ..... iii-viii
Symbols ..... iii-viii
Contacting Casa xiv
Corporate facility xiv
Technical documentation xiv
Revision history xv
Supported software releases xv
Conventions used in Casa documentation xv
Acronyms xvii

Chapter 1. Installing the Apex Strand Small Cell

Safety guidelines 1-2
Required tools 1-3
Required installation components 1-3
Approved antenna(s) 1-3
Components of the Apex Strand Small Cell 1-4
Field Replacement Units 1-5
Non-Field Replaceable Units 1-5
Power inputs 1-6
RF/AC input connector 1-6
Alarm Connector 1-7
Status LEDs 1-7

Fuse location 1-8
Network connections 1-9
Unpacking the system 1-10
Installing the Apex Strand 1-11
Installation prerequisites 1-11
Powering the Apex Strand 1-12
Apex Strand Kill Switch 1-13
Selecting the installation location 1-14
Hanging the Apex Strand 1-15
RF provisioning 1-16
Connect the power source 1-16
Verify the Strand Operation 1-16
Closing and sealing the enclosure 1-17
Torquing the Apex Strand bolts 1-17
System management 1-17

Preface

About this guide

The *Casa Systems – Apex Strand Small Cell Installation Guide* covers the initial hardware and software installation for the Casa Apex Strand Small Cell. This guide is intended for system administrators, engineers, and operators who are responsible for installing and managing the Apex Strand Small Cell. Users who perform these tasks should also be familiar with power and protective earth (PE) cabling, electronic circuitry, wiring practices, and safety precautions in outdoor installation environments.

For general information on the Apex Strand Small Cell software running with the Apex Strand Small Cell, refer to *Casa Systems – Apex Strand Small Cell Reference Guide*.

The following topics are covered in this guide:

For information about	See
Installing the Apex Strand Small Cell	Chapter 1.

Safety information and symbols

The following symbols that appear in this guide. Before working on equipment, be aware of the hazards involved with electrical circuitry and standard safety practices that can help prevent accidents.

Warning: This symbol means the task may present an electrical hazard that could cause bodily injury. Before you work on any equipment, you must be aware of the hazards involved with electrical circuitry, and familiarize yourself with standard practices for preventing accidents.

Caution: This symbol means that you must be careful. In this situation, performing tasks incorrectly could result in equipment damage or loss of data.

Danger: This symbol means that a task may present physical danger associated with lifting and moving physical equipment. This includes bodily injury and damage to system hardware.

Note: This symbol provides important or supplemental information about a task that you are performing.

Safety and Regulatory Agency Compliance

The product complies with the safety and regulatory agency standards listed below when installed in accordance with this guide.

SAVE THIS MANUAL for Future reference: Refer for Service, and decommissioning product. This documentation is to be used in conjunction with the specific product installation guide that shipped with the product. Please refer to the Installation Guide, Configuration Guide, or other enclosed additional documentation for further details.

Important Safety Instructions:

- Read these instructions
- Heed all warnings
- Follow all instructions

Additional Information: (Regulatory Model Number)

This product is assigned a Regulatory Model Number, which relates to the regulatory aspects of the design. This Regulatory Model Number is the main product identifier in the regulatory documents, test reports, and certifications. This number is not to be confused with the marketing name(s) or product numbers.

Product safety information

Symbols

Users who perform these tasks should be familiar not only with the Casa hardware and cabling, but also with electronic circuitry, wiring practices, and safety precautions.

The following symbols appear in this guide. Before working on equipment, be aware of the hazards involved with electrical circuitry and standard safety practices that can help prevent accidents.

Warning: This symbol means the task may present an electrical hazard that could cause bodily injury. Before you work on any equipment, you must be aware of the hazards involved with electrical circuitry, and familiarize yourself with standard practices for preventing accidents.

Caution: This symbol means that you must be careful. In this situation, performing tasks incorrectly could result in equipment damage or loss of data. ESD sensitive components.

Danger: This symbol means that a task may present physical danger associated with lifting and moving physical equipment. This includes bodily injury and damage to system hardware.

Note: This symbol provides important or supplemental information about a task that you are performing.

Read instructions and understand safety warnings

Warning: Read and understand the installation instructions and all safety warnings before connecting the system to the power source. Failure to understand safety precautions may result in injury.

Warning: Install only in accordance with national and local wiring regulations. Failure to follow regulations may result in damage or injury.

Warning: Only trained and qualified personnel should be allowed to install, replace, or service this equipment.

Warning: When installing or replacing the unit, the ground connection must always be made first and disconnected last.

Warning: This equipment must be grounded. Never defeat the ground conductor or operate the equipment in the absence of a suitably installed ground conductor. Contact the appropriate electrical inspection authority or an electrician if you are uncertain that suitable grounding is available.

Warning: Do not operate the unit near unshielded blasting caps or in an explosive environment unless the device has been modified to be especially qualified for such use.

Powering the node

Caution: The DAA Node draws AC power from the same coaxial cable that may be used for data. This AC power comes from an external AC power supply.

Warning: This product is powered by (40 - 90V) AC power over Coax. Never connect more than one AC INPUT or the unit may be damaged.

Removed all internal AC jumpers, if installed, prior to connecting power to the device

Warning: Take care when connecting units to the supply circuit so that wiring is not overloaded. Install only in accordance with national and local wiring regulations.

Caution: The operator must verify that the RF connector and cabling types used are suitable to handle the calculated pass through current to support powering other devices. (for example F-type connectors can only handle up to 8amps.)

Warning: When configuring the unit, ensure all stingers, RF connectors, and cables are properly rated to handle the AC electrical current.

Ensure that all enclosure connectors are rated IP67 or better.

Failure to do so may result in damage to the product.

Warning: This product requires short-circuit (over-current) protection, to be provided as part of the CATV Power Supply installation. Install only in accordance with national and local wiring regulations.

Caution: Attached cables and/or connectors should be IP67 rated.

Warning: To avoid electric shock, do not work on the system or connect or disconnect cables during periods of lightning activity.

Caution: This Product generates radio frequency (RF) energy. To ensure that your exposure to RF energy is within the FCC allowable limits for occupational use, stay back 3 feet from the device.

Supply circuit warning

Note: Ultimate disposal of this product should be handled according to all national laws and regulations.

Federal Communications Commission (FCC) statement

This device complies with FCC part 15 FCC Rules. Operation is subject to the following two conditions:

1. This device may not cause harmful interference and
2. This device must accept any interference, including interference that may cause undesired operation of the device.

FCC Warning

Changes or modifications not expressly approved by the party responsible for compliance could void the user's authority to operate the equipment. Note: This equipment has been tested and found to comply with the limits for a Class B digital device, pursuant to part 15 of the FCC Rules. These limits are designed to provide reasonable protection against harmful interference in a residential installation. This equipment generates, uses and can radiate radio frequency energy and, if not installed and used in accordance with the instructions, may cause harmful interference to radio communications. However, there is no guarantee that interference will not occur in a particular installation. If this equipment does cause harmful interference to radio or television reception, which can be determined by turning the equipment off and on, the user is encouraged to try to correct the interference by one or more of the following measures:

- Reorient or relocate the receiving antenna.
- Increase the separation between the equipment and receiver.
- Connect the equipment into an outlet on a circuit different from that to which the receiver is connected.
- Consult the dealer or an experienced radio/TV technician for help.

This device meets the FCC requirements for RF exposure in public or uncontrolled environments.

Wi-Fi Compliance Statements:

This device contains FCC ID: PVH0965

Caution:

Any changes or modification could cause the module to cease to comply with FCC rules part 15 and thus void the user's authority to operate the equipment.

§15.407 statement; in case of absence of information to transmit or operational failure the module types ODIN-W2 will automatically discontinue transmission.

Maximum Permissible Exposure distance statement

Casa's fixed wireless base station products which are evaluated to determine RF exposure levels and define the maximum permitted exposure (MPE) distance for each device.

This system has been evaluated for RF exposure for Humans under 47 CFR §1.1307 , using American National Standards Institute ANSI c95.1 and KDB 447498 methods.

Based on these measurements and calculations, to maintain compliance for RF exposure in the United States, the minimum separation distance is 3 feet (0.91 m) from general bystanders.

EU Statement

This device has not been authorized as required by European Union Directives. This device is not, and may not be, offered for sale or lease, or sold or leased, until authorization is obtained.

Adequate measures must be taken during demonstrations to ensure that electromagnetic disturbances are avoided. Special temporary authority may be required by local agencies to operate the device

Contacting Casa

Corporate facility

Casa Systems, Inc.
100 Old River Road
Andover, MA 01810
Tel.: 978-688-6706
World Wide Web: www.casa-systems.com

Technical documentation

Casa Systems provides the following documentation set in PDF format, viewable using current versions of Adobe Reader©. The latest documentation and revisions are uploaded on a continued basis for Casa customers.

Contact Casa Technical Support or a Casa Sales Representative for assistance with downloading selected Casa documentation PDFs.

Administrative and Configuration Guides

- *Casa Systems – Apex Strand Small Cell Installation Guide* (this document)
- *Casa Systems – Apex Strand Small Cell Reference Guide*
- *Casa Systems – AeMS SNMP MIBs and Traps Reference*
- *Casa Systems – Apex Small Cell OM Counters Reference Guide*
- *Casa Systems – Apex Small Cell Parameters Reference Guide*
- *Casa Systems – Axyom Element Management System (AeMS) Administration Guide*

Revision history

- 01.00.00 — July 2018
- 01.02.00 — September 2018
- 01.03.00 — October 2018
- 01.04.00 — December 2018

Supported software releases

The following Casa software release(s) are supported in this latest revision:

- 4.2.0 — August 2018
- 4.2.1 — September 2018
- 4.2.2 — October 2018
- 4.2.3 — December 2018

Conventions used in Casa documentation

Key Convention	Function	Example
boldface font	Commands and keywords are in **boldface**.	Enter **`abc`**
Italic font	Emphasized terminology is in *italics*.	*burst profile*
brackets [ ]	Elements in square brackets are optional.	`[<ip_addr>]`
braces {x | y | z}	Indicates a required argument with a choice of values; choose one.	`{enabled | disabled}`
brackets [x | y | z]	Indicates an optional argument with a choice of values; choose one.	`[abc | 123]`
vertical bar |	Separates parameter values. Same as “or.”	`{TCP | TLS}`
string	A non-quoted set of characters. Do not use quotation marks (“”) around the string as the string will include the quotation marks.	`abc`
`screen` font	CLI sessions and information the system displays are in `screen` font.	`CASA(config)#`
`boldface screen` font	Information you must enter is in **`boldface screen`** font.	

Key Convention	Function	Example
`<variable>`	Arguments for which you supply values are enclosed in angle brackets. Multi-word arguments are indicated with underscore-separated words.	`<as_number>`
`<value:value>`	Arguments may include a range of values, with the minimum and maximum values separated by a colon.	`<0:65535>`

Acronyms

Casa Systems manuals contain the following industry-standard and product-specific acronyms:

3GPP	3rd Generation Partnership Project
AES	Advanced Encryption Standard
CA	Certificate Authority
CBC	Cypher Block Chaining (encryption mode)
CDMA	Code Division Multiple Access
CPE	Customer Premises Equipment
C-RNTI	Cell- Radio Network Temporary Identifier
CSG	Closed Subscriber Group (ID in PLMN)
DES	Data Encryption Standard
DH	Diffie-Hellman
DHCP	Dynamic Host Configuration Protocol
DRX	Discontinuous Reception
DS	Downstream
DSCP	Differentiated Services Control Point
EAP	Extensible Authentication Protocol
ECGI	E-UTRAN Cell Global Identifier
ECI	E-UTRAN Cell Identifier
eNB	Evolved (E-UTRAN) Node B
EPC	Evolved Packet Core
e-RAB	E-UTRAN Radio Access Bearer
ESP	Encapsulating Security Payload (of IPsec)
EUTRAN	Evolved UMTS Terrestrial Radio Access Network
FQDN	Fully Qualified Domain Name
GBR	Guaranteed Bit Rate
GERAN	Global System for Mobile Edge Radio Access Network
GGSN	Gateway General Packet Radio Service Support Node
GigE	Gigabit Ethernet
GPRS	General Packet Radio Service
GRE	Generic Router Encapsulation

GSM	Global System for Mobile
GTP	General Packet Radio Service Tunneling Protocol
GTPv2	GPRS Tunneling Protocol Version 2
HFC	Hybrid Fiber-Coaxial
HMAC	Hashing Message Authentication Code
HNB	Home NodeB Gateway
HNB-GW	Home NodeB Gateway
HPLMN	Home Public Land Mobile Network
HSDPA	High-Speed Downlink Packet Access
HSUPA	High-Speed Uplink Packet Access
IKE	Internet Key Exchange
IKEv2	Internet Key Exchange Protocol version 2
IMC	International Mobile Communications
IMS	IP Multimedia Subsystem
IMSI	International Mobile Subscriber Identity
IPsec	Internet Protocol Security
IPv4	Internet Protocol Version 4
IPv6	Internet Protocol Version 6
LTE	Long Term Evolution
LTE-A	Long Term Evolution Advanced (4G)
MCC	Mobile Country Code
MIMO	Multiple-Input Multiple-Output
MNC	Mobile Network Code
OAKLEY	Diffie-Hellman key exchange groups
OFDMA	Orthogonal Frequency Division Multiple Access
PKI	Public Key Infrastructure
PLMN	Public Land Mobile Network
PSK	Pre-Shared Key
QCI	Quality of Service Class Identifier
QoS	Quality of Service
RAT	Radio Access Technology
RTP	Real-time Transport Protocol

S1-AP	S1 Application Protocol
S1-MME	S1 Mobility Management Entity
S1-U	S1 User plane interface
SA	Security Association (for IPsec)
SCTP	Stream Control Transmission Protocol
SeGW	Security Gateway
TAC	Tracking Area Code
TAI	Tracking Area Identity
TCP	Transmission Control Protocol
TD-SCDMA	Time Division Synchronous Code Division Multiple Access
UDP	User Datagram Protocol
UE	User Equipment
UMTS	Universal Mobile Telecommunications Systems
UTRAN	Universal Terrestrial Radio Access Network
X.509	Public Key Infrastructure encryption standard
XGigE	XGigabit Ethernet

Chapter 1. Installing the Apex Strand Small Cell

This chapter covers the procedures for installing and connecting the Apex Strand. It includes the following topics:

Topic	Page
Safety guidelines	1-2
Required tools	1-3
Approved antenna(s)	1-3
Components of the Apex Strand Small Cell	1-4
Power inputs	1-6
Fuse location	1-8
Network connections	1-9
Unpacking the system	1-10
Installing the Apex Strand	1-11
Installation prerequisites	1-11
Powering the Apex Strand	1-12
Apex Strand Kill Switch	1-13
Selecting the installation location	1-14
Hanging the Apex Strand	1-15
RF provisioning	1-16
Connect the power source	1-16
Verify the Strand Operation	1-16
Closing and sealing the enclosure	1-17
Torquing the Apex Strand bolts	1-17
System management	1-17

Safety guidelines

This section provides general safety guidelines during the equipment installation and operation.

Warning: Only trained and qualified personnel should install, replace, or service this equipment.

Do not work on the system or connect or disconnect cables during lightning activity.

Be sure to follow these important electrical guidelines:

- Always unplug or disconnect the power cable before installing or removing the unit.
- Do not work alone if potentially hazardous conditions exist.
- Never assume that power is disconnected from a circuit. Always check.
- If an electrical accident occurs, proceed as follows:
  - Use caution; do not become a victim yourself.
  - Turn off power to the system.
  - If possible, send another person to get medical aid. Otherwise, assess the condition of the victim and then call for help.
  - Determine whether the person needs rescue breathing or external cardiac compressions; then take appropriate action.

Required tools

The standard lineman tool set for installing telecommunications equipment outdoors includes a variety of open end wrenches that are necessary for the Apex Strand Small Cell enclosure installation.

Required installation components

Following components are not provided by Casa, but needed for successful installation:

- Kill switch supplied by CableServ (part #???)
- Kill switch alarm connector, supplied by Chogori, USA (Vendor part#23003536-01)
- Hardline coax input

Approved antenna(s)

The following antenna(s) is approved for use with this device:

Wi-Fi Antenna(s):

TAOGLAS

Model:	GW.26.0112.HT
Frequency:	2.4-2.5 GHz
Peak Gain:	1.2 dBi,
Length:	84mm
Impedance:	50 ohm

Components of the Apex Strand Small Cell

The Apex Strand Small Cell is designed to be installed in an aerial outside plant environment of the multiservice network operator. It is designed specifically for a harsh environment.

Figure 1-1 shows the location of the five major components that make up the Apex Small Cell unit. Only the Power Supply Unit is designed to be field replaceable. All other parts should be serviced only by an authorized service location.

Figure 1-1. Inside the Apex Strand Small Cell unit

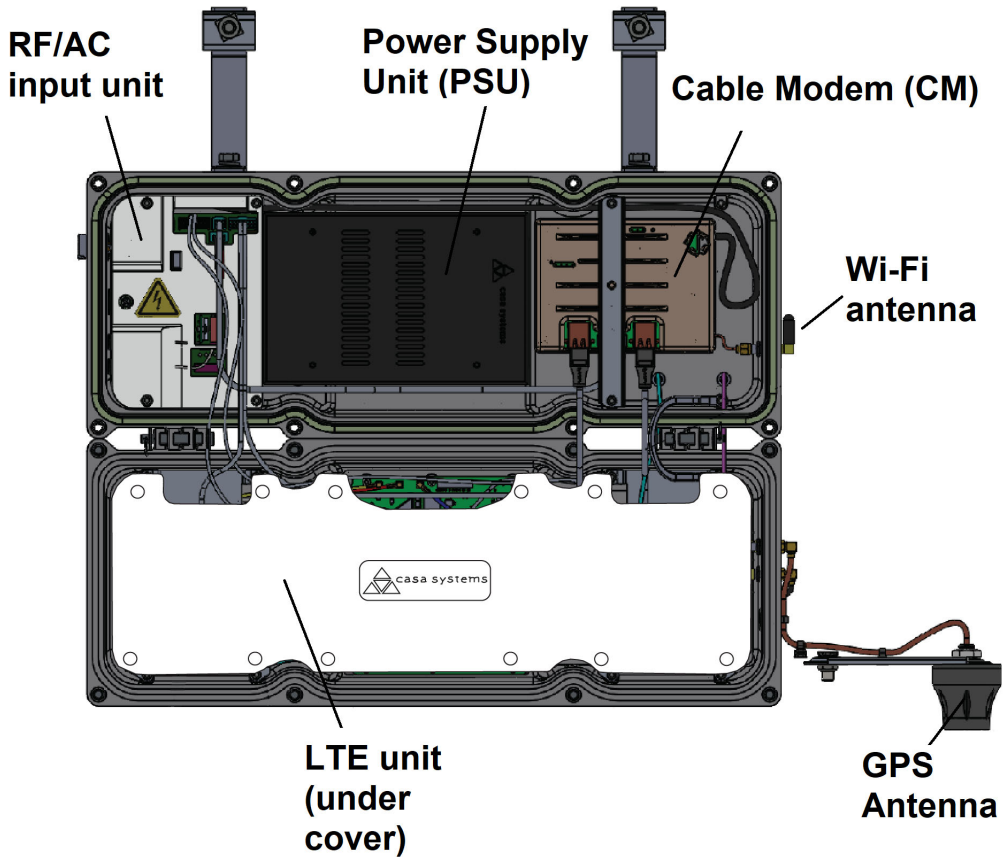

Field Replacement Units

- Power Supply Unit (PSU) which converts AC to DC voltage

Non-Field Replaceable Units

- RF/AC input unit (includes the input plugin and surge suppressor)
- LTE unit
- Cable Modem (CM)
- GPS antenna
- Wi-Fi antenna

Figure 1-2 shows the unit in its closed (normal) state as it would be oriented in its designed operational position.

Figure 1-2. Apex Strand Small Cell unit

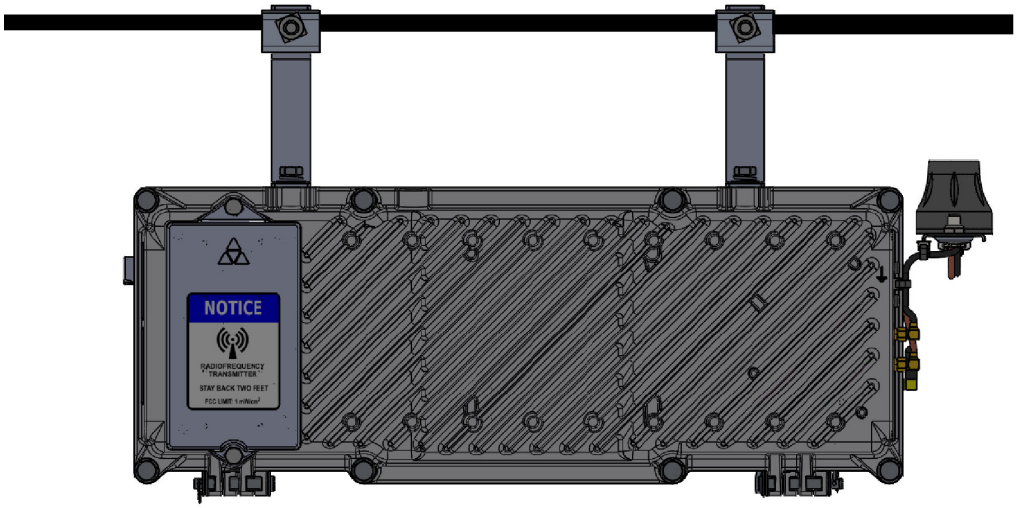

Power inputs

Located on the side of the unit are two connections (see Figure 1-3):

- RF/AC input connector
- Alarm connector

Figure 1-3. Power inputs

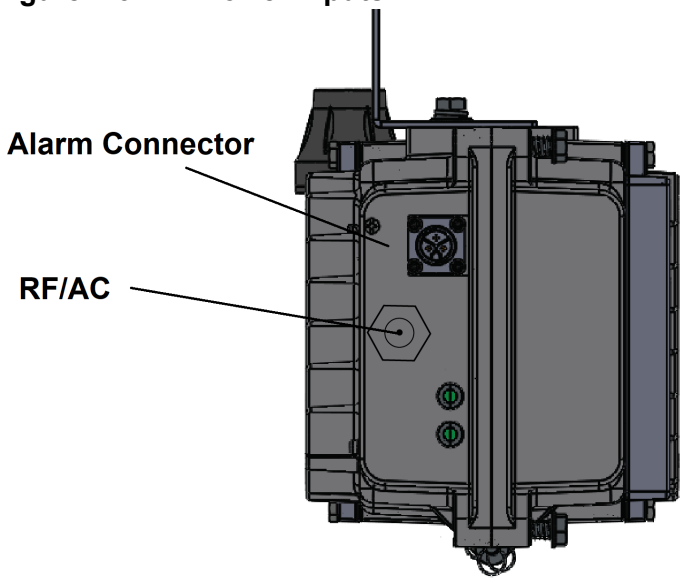

RF/AC input connector

In order to power the unit from the existing coaxial cable plant, the enclosure supports powering from 45-90 VAC via the combined RF/AC input. This input brings both the AC system power but also the RF communications connection.

This unit supports a standard 5/8 inch threaded connector used in the operators outside plant environment. Because of outdoor exposure you must use hardline coax input.

Alarm Connector

The alarm connector is located above the RF/AC input connector. It provides a signaling connections for communications from the Small Cell to the alarm monitoring system via the RF communications path established by the unit.

Status LEDs

Below the RF/AC connector are two status monitoring LEDs that are visible from the ground during daylight hours (see Figure 1-4). The LEDs are intended to give the technician an indication of the overall health of the power and communications network between the internal devices and the edge DOCSIS equipment.

Top LED: Provides AC/DC power status of the unit. Solid green when the status is in a normal state.

Lower LED: Provides status of the DOCSIS modem link. Solid green when the status is in a normal state.

Figure 1-4. LEDs

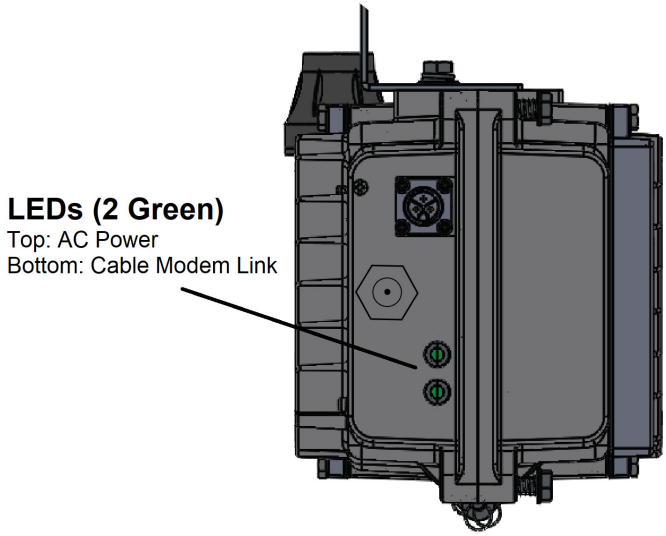

Fuse location

After opening the unit, there is a fuse slot located on the interface board in the base of the unit. This unit comes populated with a 7.5a fuse that can be replaced as a serviceable protection device (see Figure 1-5). Adjacent to the unit are the pluggable surge suppressor devices. These are not field changeable units and should only be replaced by a qualified technician.

Figure 1-5. Fuse location

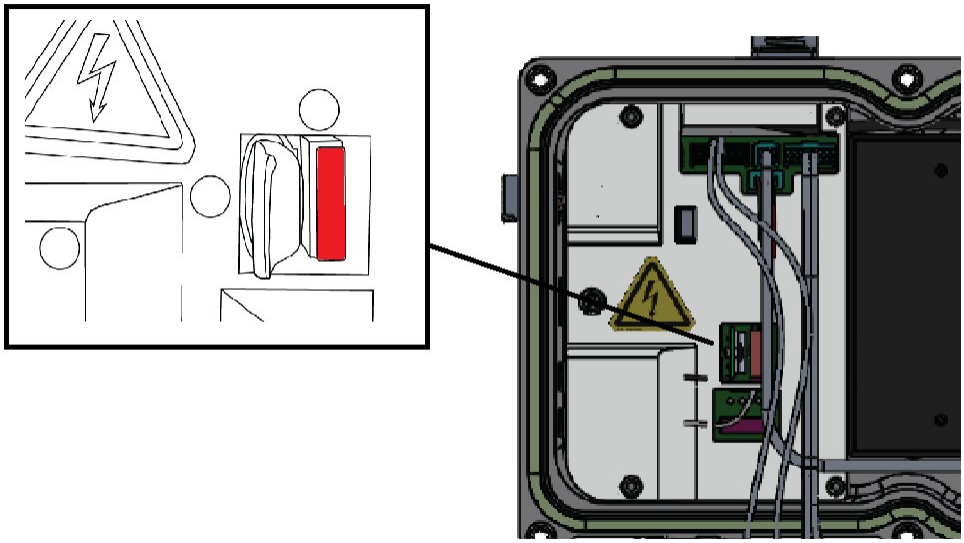

Warning: To avoid electric shock, ensure the single AC input coaxial cable feed is properly identified and disconnected prior to servicing.

Warning: Do not install more than one fuse in the Apex Strand Small Cell. Do not install the Apex Strand Small Cell if there is no fuse inserted.

Network connections

The Apex Strand supports the following network connections:

- The Apex Strand is connected to the operators network through the HFC network.
- The Apex Strand connects to the CATV network via the hard line coax connection. A user connects via LTE wireless through the Apex Strand using the CATV network as the back haul to the internet.
- The CM inside the Apex Strand unit is DOCSIS 3.1 compliant. The RF/AC connection to the Apex Strand needs to be weatherproof.
- The GPS antenna comes fixed on top of the Apex Strand. It is mounted on top of a 4 inch long arm, which can be horizontally rotated up to 180 degrees from its initial position. The GPS antenna must have an unobstructed view towards the sky.
- The Wi-Fi Antenna comes fixed on the unit. The antenna should point downward (towards the street) for maximum efficiency. The Wi-Fi antenna can be vertically rotated 360 degrees.

Unpacking the system

When the system arrives at your installation site, you need to carefully unpack the system and other items included with the shipment. Check the shipping box for any exterior damage.

Table 1-6 provides a list of materials included with the Apex Strand:

Table 1-6. Apex Strand contents

Item	Quantity	Description
Apex Strand unit	1	Metal unit with fins with GPS antenna installed
Mounting brackets	2	Brackets that allows the unit to hang from the strand
Mounting bolts/nuts	2	Used to tighten the mounting brackets onto the strand

Note: If damage is present, notify the shipping company and Casa Systems immediately for a return material authorization, if necessary.

Installing the Apex Strand

Warning: This device is intended for installation and operation only by qualified and well-trained service personnel. Ordinary users are not to have access to any part of this product. Product must be mounted only in locations where access is possible only by trained personnel. Product should never be mounted on a house/dwelling where an ordinary, non-trained person must take into account the possibility of a home owner conducting maintenance (painting, cleaning, etc). on their home while using a ladder. In addition, the same requirements apply to commercial locations. Access by non-trained personnel shall not be possible and only mounting locations that prevent access by a non-trained person are acceptable.

Installation prerequisites

The following prerequisites must be satisfied prior to installing the Apex Strand:

- Ensure required cables for connecting the unit are available.
- Clear the installation location considering the required GPS clearance signal.

Warning: To avoid electric shock, verify that the internal fuse is not installed in the unit. See "Fuse location" on page 1-8.

Powering the Apex Strand

The Apex Strand is powered via the RF/AC connection as shown in Figure 1-7. These cables can either be from a power passing line splitter via either an RG6 or hardline cable depending on the distance following the operators construction practices.

This unit can also be powered from a power passing multi-tap device using RG6 or larger flexible cable following the operators installation practices.

Figure 1-7. Apex Strand power options

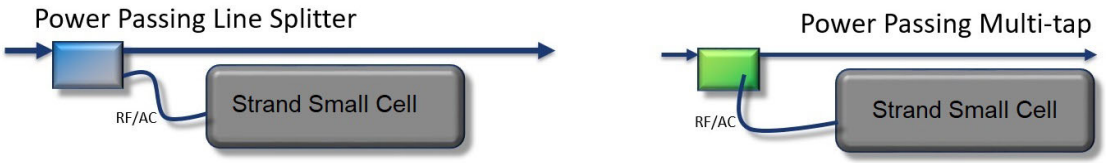

Apex Strand Kill Switch

The Apex Strand can be installed using a Kill Switch (provided by the operator) that is installed between the power supply and the Apex Strand as shown in Figure 1-8. This is an example of the connections for a typical installation utilizing a kill switch. Or, this unit can be operated without the kill switch if desired. This equipment is required to be installed per the operators specifications to meet the required local installation practices.

The Kill Switch controls power and RF connectivity to the Strand unit. When the power to the Strand unit is on and the button is pressed on the Kill Switch, power to the Strand unit will be disconnected after 10 seconds.

Figure 1-8. Apex Strand Kill Switch

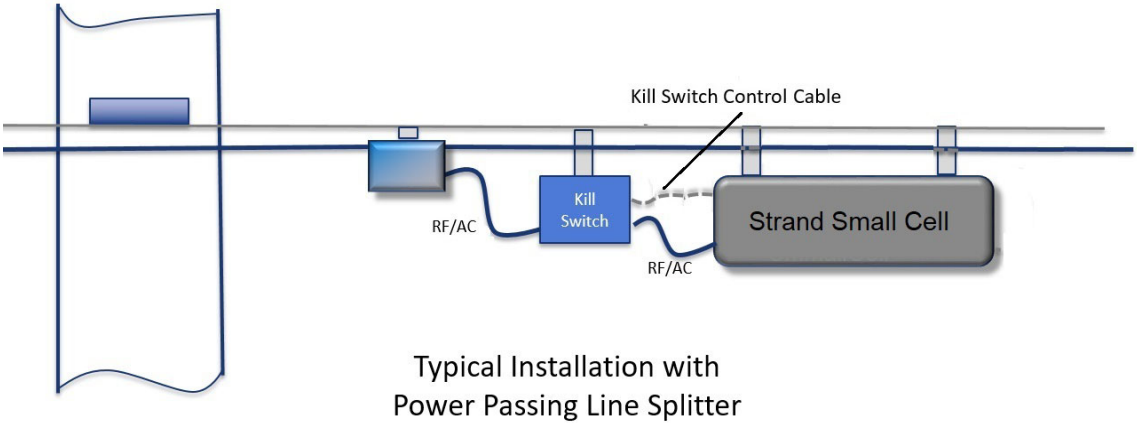

Selecting the installation location

The Apex Strand is designed for installation areas having above-ground utilities. The Apex Strand can be installed on a strand wire with accessibility to the coaxial cable output and system power source. Figure 1-9 shows the a typical Strand Installation.

These units are designed to be mounted in a HORIZONTAL only position and is not designed to be mounted vertically. All hardware connections that are made in the field need to be torqued to 10 ft/lbs.

Preparing the installation site

- Disconnect AC power to the work location.
- Access the installation location to ensure that it meets the operators requirements for the GPS antenna.
- Create a connection to the HFC network.
- Prepare the cable(s) that will connect to the Apex Strand as required per the network operators guidelines.

Figure 1-9. Apex Strand installation

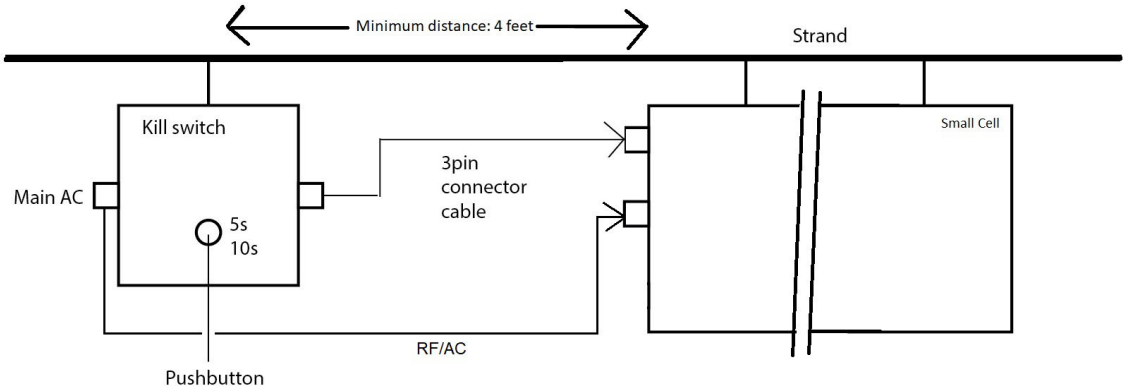

Hanging the Apex Strand

1. Install the strand offset hanger brackets onto the strand unit as shown in Figure 1-10 using the provided hardware.

Figure 1-10. Installation brackets

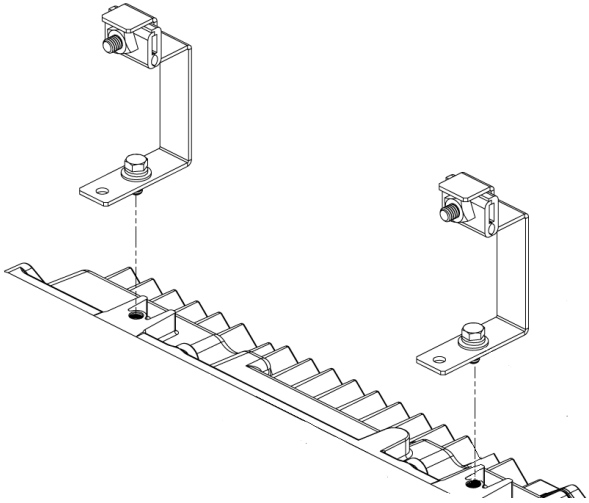

2. Hang the closed small cell from the strand as shown in Figure 1-9, and secure the hanging brackets to the operators support strand.
3. Torque the strand clamps to 10 ft/lbs.
4. Open the Apex Strand by loosening the retaining bolts around the enclosure, carefully open the lid, and locate the fuse on the RF/AC input section.
5. Install the appropriate RF plugin in the attenuator slot per installation guidelines provided by the local design team.

RF provisioning

1. Before applying power to the Apex Strand, a qualified technician should verify transmit levels at the tap location.
2. Determine target transmit levels based on the specific installation location.
3. Verify transmit level of the cable modem is in the range of +35 to +51 dBmv.

Connect the power source

1. Connect the power cable (hardend coax line) to the Apex Strand unit. Ensure the weather sealing of the outdoor housing connector per local installation guidelines.
2. If you are using a Kill Switch in your installation, connect the Kill Switch 3 pin connector cable to the Apex Strand alarm connector input (see Figure 1-3).
3. Install the fuse inside the Strand unit.
4. Close the cover to the Strand unit and tighten the bolts based on the torque recommendations (see "Closing and sealing the enclosure" on page 1-17).
5. Move away from the Strand unit to a safe distance and reconnect the power to the work area.
6. Verify the power LED status on the Kill Switch and/or on the Apex Strand.

Verify the Strand Operation

1. Once AC power is applied to the Apex Strand, verify that the Green LED on the side of the unit is lit (see Figure 1-4). Wait several minutes for the Apex Strand to boot up and make an attempt to make a data connection to the HFC.
2. Coordinate with the operator's NOC to bring up the data connection to the Apex Strand, which may require adjusting the attenuation settings. The Apex Strand ships with a 0dB attenuator installed. It is up to the NOC and the installer to achieve the optimal signal level.
3. Once the NOC has verified that you have a connection to the Apex Strand's cable modem, and that it can recognize a CPE and verify the CM status LED is green.
4. The LTE unit is ready to connect to the Sprint network.

Closing and sealing the enclosure

All Apex Strand enclosures are weather and electronically protected using both an Environmental and EMI rubber seal integrated into the enclosure halves. Retention bolts are held in place by lugs on the outside of the enclosure.

Torquing the Apex Strand bolts

Using an open-end 1/2 inch wrench or socket, tighten the bolts on the Apex Strand to a final torque of 50 in lbs/5.6 Nm in the sequence shown in Figure 1-11.

Figure 1-11. Apex Strand bolt torquing sequence

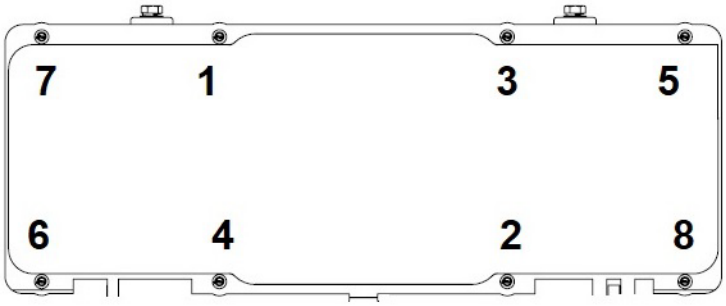

System management

The Apex Strand Small Cell is designed for remote system management via the AeMS. In case of loss of network connectivity the unit supports some diagnostic service via on board Wi-Fi.

The Apex Strand appears as a CM and a CPE device in the HFC network. The internal CM connects to the HFC network as a standard device.

casa systems

100 Old River Road
Andover, MA 01810
USA
978-688-6706

Apex Strand Small Cell Installation Guide

© 2018 Casa Systems, Inc.

All rights reserved.

DOC-3077-01

Document Revision 1.04.00
December 2018
Printed in United States of America