TEST REPORT

Test Report No. : UL-RPT-RP-12260093-116-FCC

Applicant	:	Miura Systems
Model No.	:	M010
FCC ID	:	2AO4FM010-1
Technology	:	Near Field Communication (NFC)
Test Standard(s)	:	FCC Parts 15.207, 15.209(a) & 15.225

For details of applied tests refer to test result summary

1. This test report shall not be reproduced in full or partial, without the written approval of UL International Germany GmbH.
2. The results in this report apply only to the sample tested.
3. The test results in this report are traceable to the national or international standards.
4. Test Report Version 1.0
5. Result of the tested sample: **PASS**

Prepared by: Segun I. Adeniji
Title: Engineer
Date: 14.June.2018

Approved by: Ajit, Phadtare
Title: Lead Test Engineer
Date: 14.June.2018

Deutsche Akkreditierungsstelle
D-PL-19381-02-00

This laboratory is accredited by DAkkS.
The tests reported herein have been performed in accordance with its' terms of accreditation.

UL INTERNATIONAL GERMANY GMBH
Hedelfinger Str. 61
70327 Stuttgart, Germany
STU.CTECHLab@ul.com

This page has been left intentionally blank.

Table of Contents

1. Customer Information **4**
1.1.Applicant Information 4
1.2.Manufacturer Information 4

2. Summary of Testing **5**
2.1. General Information 5
Applied Standards 5
Location 5
Date information 5
2.2. Summary of Test Results 6
2.3. Methods and Procedures 6
2.4. Deviations from the Test Specification 6

3. Equipment Under Test (EUT) **7**
3.1. Identification of Equipment Under Test (EUT) 7
3.2. Description of EUT 7
3.3. Modifications Incorporated in the EUT 7
3.4. Additional Information Related to Testing 8
3.5. Support Equipment 8

4. Operation and Monitoring of the EUT during Testing **9**
4.1. Operating Modes 9
4.2. Configuration and Peripherals 9

5. Measurements, Examinations and Derived Results **10**
5.1. General Comments 10
5.2. Test Results 11
5.2.1. Transmitter AC Conducted Spurious Emissions 11
5.2.2. Transmitter Fundamental Field Strength 16
5.2.3. Transmitter Radiated Spurious Emissions 19
5.2.4. Transmitter Frequency Stability (Temperature & Voltage Variation) 24

6. Measurement Uncertainty **27**

7. Used equipment **28**

8. Open-Area-Test Site comparison **30**

9. Report Revision History **34**

1. Customer Information

1.1.Applicant Information

Company Name:	Miura Systems
Company Address:	Unit 3, Cliveden Office Village, Lancaster Road, Cressex Industrial Estate, High Wycombe HP12 3YZ, United Kingdom
Company Phone No.:	+44 1494 442114
Company E-Mail:	rstephens@miurasystems.com
Contact Person:	Richard Stephens

1.2.Manufacturer Information

Company Name:	Jabil
Company Address:	Miłosna 32, 82-500 Kwidzyn, Poland
Company Phone No.:	07748766657
Company E-Mail:	rstephens@miurasystems.com
Contact Person:	Richard Stephens

2. Summary of Testing

2.1. General Information

Specification Reference:	47CFR15.225
Specification Title:	Code of Federal Regulations Volume 47 (Telecommunications): Part 15 Subpart C (Radio Frequency Devices) - Section 15.225
Specification Reference:	47CFR15.207 and 47CFR15.209
Specification Title:	Code of Federal Regulations Volume 47 (Telecommunications): Part 15 Subpart C (Intentional Radiators) - Sections 15.207 and 15.209
Test Firm Registration:	399704

Applied Standards

Location

Location of Testing:	UL International Germany GmbH Hedelfinger Str. 61 70327 Stuttgart Germany

Date information

Order Date:	11 April 2018
EUT arrived:	18 May 2018
Test Dates:	24 May 2018 to 25 May 2018
EUT returned:	-/-

2.2. Summary of Test Results

Clause	Measurement	Complied	Did not comply	Not performed	Not applicable
Part 15.207	Transmitter AC Conducted Emissions	☒	☐	☐	☐
Part 15.225(a)(b)(c)(d)	Transmitter Fundamental Field Strength	☒	☐	☐	☐
Part 15.209(a)/ 15.225(d)	Transmitter Radiated Emissions	☒	☐	☐	☐
Part 15.225(e)	Transmitter Frequency Stability (Temperature & Voltage Variation)	☒	☐	☐	☐

2.3. Methods and Procedures

Reference:	ANSI C63.4-2014
Title:	American National Standard for Methods of Measurement of Radio-Noise Emissions from Low-Voltage Electrical and Electronic Equipment in the Range of 9 kHz to 40 GHz.
Reference:	ANSI C63.10-2013
Title:	American National Standard of Procedures for Compliance Testing of Unlicensed Wireless Devices
Reference:	KDB 414788 D01 Radiated Test Site v01
Title:	TEST SITES FOR RADIATED EMISSION MEASUREMENTS
Reference:	FCC KDB Publication Number 174176 Date: June 3, 2015
Title:	AC Power-Line Conducted Emissions Frequently Asked Questions

2.4. Deviations from the Test Specification

For the measurements contained within this test report, there were no deviations from, additions to, or exclusions from the test specification identified above.

3. Equipment Under Test (EUT)

3.1. Identification of Equipment Under Test (EUT)

Brand Name:	Miura Systems
Model Name or Number:	M010
Test Sample Serial Number:	010-926353 (Radio Test Sample)
Hardware Version Number:	M010-TEST05-V2-0
OS Software Version Number:	M000-TESTOS-V7-9f
Application Version Number:	M999-TESTEXERCISE01-V0-7
FCC ID:	2AO4FM010-1

Brand Name:	Miura Systems
Model Name or Number:	M010
Test Sample Serial Number:	010-926351 (AC Conducted Test Sample with terminated NFC Antenna)
Hardware Version Number:	M010-TEST05-V2-0
OS Software Version Number:	M000-TESTOS-V7-9f
Application Version Number:	M999-TESTEXERCISE01-V0-7
FCC ID:	2AO4FM010-1

3.2. Description of EUT

The EUT is a payment device with Bluetooth and NFC reader functionality. The device is powered by an internal battery and the antennas are internal to the device

3.3. Modifications Incorporated in the EUT

No modifications were applied to the EUT during testing.

3.4. Additional Information Related to Testing

Tested Technology:	NFC		
Category of Equipment:	Transceiver		
Channel Spacing:	Single channel device		
Transmit Frequency Range:	13.56 MHz		
Power Supply Requirement:	Nominal: 3.8 V DC 1.0 A	3.4 V DC - 4.2 V DC 1.0 A	
Power Supply Type:	Rechargeable Internal Battery (393450AL|VK0800mAh)		
Battery Charger Details:	Miura Systems Fast Charger | M010-MP15-V1 | 5 V DC & 2 A Min | Over USB Cable Length 1.53 m		
Tested Temperature Range:	Minimum	-20 °C	
	Maximum	+50 °C	

3.5. Support Equipment

The following support equipment was used to exercise the EUT during testing:

Support Equipment (Manufacturer supplied)

Item	Description	Brand Name	Model Name or Number	Serial Number
1	NFC Tag	Cornecard	VISA	4950 6701 1363 4094
2	AC-DC Adapter	ANKER	24W 2-Port USB Charger	K4734164
3				

4. Operation and Monitoring of the EUT during Testing

4.1. Operating Modes

The EUT was tested in the following operating mode(s):
☒ Continuous transmitting modulated carrier NFC test mode at full power

4.2. Configuration and Peripherals

The EUT was tested in the following configuration(s):

- The NFC transmitter test mode was enabled using test instructions provided supplied by the customer in the document “M10 Software Instructions v2.pdf”.
- By placing an NFC Tag close to the EUT, the continuous transmission was enabled.
- Frequency tests were performed with the EUT placed in a climatic chamber. Only Temperature tests were performed as the EUT has no capacity for its voltage to be varied.
- Transmitter AC Conducted Spurious Emissions were performed with internal battery charger & EUT with terminated NFC Antenna port.

5. Measurements, Examinations and Derived Results

5.1. General Comments

Measurement uncertainties are evaluated in accordance with current best practice. Our reported expanded uncertainties are based on standard uncertainties, which are multiplied by an appropriate coverage factor to provide a statistical confidence level of approximately 95%. Please refer to Section 6 *Measurement Uncertainty* for details.

In accordance with DAkkS requirements all the measurement equipment is on a calibration schedule. All equipment was within the calibration period on the date of testing.

5.2. Test Results

5.2.1. Transmitter AC Conducted Spurious Emissions

Test Summary:

Test Engineer:	Asim	**Test Date:**	17.05.2018
Test Sample Serial Number:	010-926351		
Test Site Identification	SR 7/8		

FCC Reference:	Part 15.207
Test Method Used:	ANSI C63.10 Section 6.2 / FCC KDB 174176 and Notes below

Environmental Conditions:

Temperature (°C):	20
Relative Humidity (%):	35

Settings of the Instrument

Detector	Quasi Peak/ Average Peak

Note(s):

1. The EUT was placed into its battery charger which was plugged into 120 VAC 60 Hz single phase supply via a LISN.
2. The EUT with terminated NFC Antenna port was put into test mode and the NFC Tag was placed on the EUT.
3. Pre-scans were performed and markers placed on the highest live and neutral measured levels. Final measurements were performed on the marker frequencies and the results entered into the tables below.
4. A pulse limiter was fitted between the LISN and the test receiver.

Transmitter AC Conducted Spurious Emissions (continued)

Test setup:

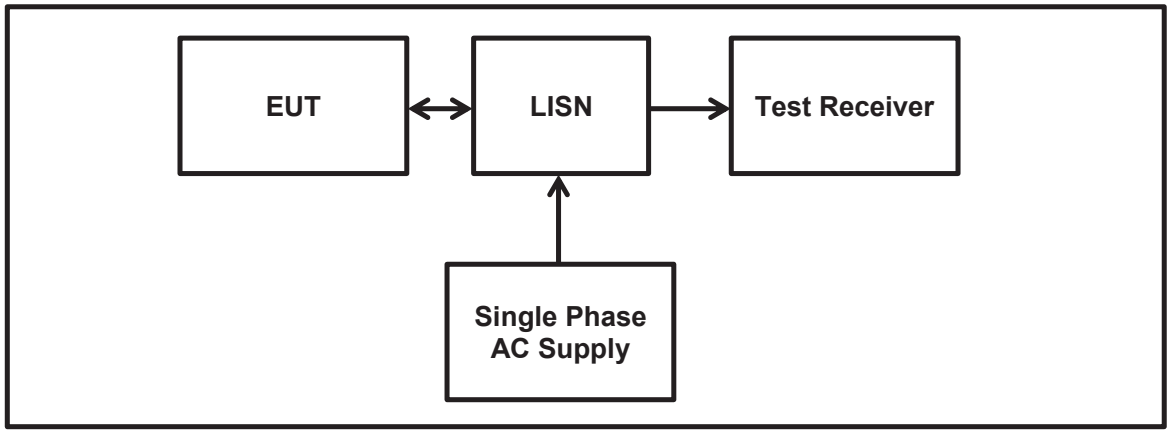

Results: Live / Quasi Peak

Frequency (MHz)	Line	Level (dBµV)	Limit (dBµV)	Margin (dB)	Result
0.18225	Live	45.5	64.4	18.9	Pass
0.22304	Live	37.9	62.7	24.8	Pass
0.63939	Live	47	56	9	Pass
0.88334	Live	31.4	56	24.6	Pass
5.80229	Live	36.9	60	23.1	Pass
10.49629	Live	36.8	60	23.2	Pass

Results: Live / Average

Frequency (MHz)	Line	Level (dBµV)	Limit (dBµV)	Margin (dB)	Result
0.18225	Live	28.1	54.4	26.3	Pass
0.22304	Live	19.5	52.7	33.2	Pass
0.63939	Live	37.6	46	8.4	Pass
0.88334	Live	20.3	46	25.7	Pass
5.80229	Live	27	50	23	Pass
10.49629	Live	30.6	50	19.4	Pass

Results: Neutral / Quasi Peak

Frequency (MHz)	Line	Level (dBµV)	Limit (dBµV)	Margin (dB)	Result
0.17825	Neutral	48.1	64.6	16.5	Pass
0.22138	Neutral	37.9	62.8	24.9	Pass
0.51278	Neutral	38.9	56	17.1	Pass
0.65087	Neutral	50.4	56	5.6	Pass
1.12178	Neutral	35.5	56	20.5	Pass
9.67556	Neutral	38	60	22	Pass

Results: Neutral / Average

Frequency (MHz)	Line	Level (dBµV)	Limit (dBµV)	Margin (dB)	Result
0.17825	Neutral	35	54.6	19.6	Pass
0.22138	Neutral	23.1	52.8	29.7	Pass
0.51278	Neutral	29.3	46	16.7	Pass
0.65087	Neutral	40.9	46	5.1	Pass
1.12178	Neutral	26.1	46	19.9	Pass
9.67556	Neutral	31.5	50	18.5	Pass

Result: Pass

Plot: Live and Neutral Line

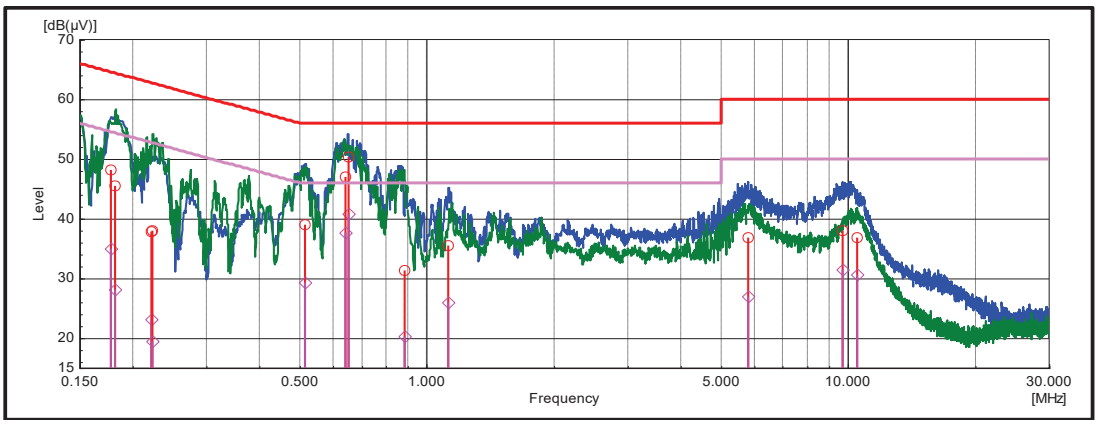

Note: These plots are pre-scans and for indication purposes only. For final measurements, see accompanying tables.

5.2.2. Transmitter Fundamental Field Strength

Test Summary:

Test Engineer:	Segun Adeniji	**Test Date:**	24 May 2018
Test Sample Serial Number:	010-926353		
Test Site Identification	SR 1/2		

FCC Reference:	Part 15.225(a)(b)(c)(d)
Test Method Used:	ANSI C63.10 Section 6.4

Environmental Conditions:

Temperature (°C):	24
Relative Humidity (%):	32

Settings of the Instrument

RBW/VBW	10 kHz/ 30 kHz
Span	3 MHz
Sweep time	25 ms
Detector	Peak

Note(s):

1. The limit is specified at a test distance of 30 metres. However, as specified by FCC Section 15.31 (f)(2), measurements may be performed at a closer distance and the measured level corrected to the specified measurement distance by using the square of an inverse linear distance extrapolation factor (40dB/decade).
2. In accordance with 414788 D01 Radiated Test Site v01 an alternative Test Site was used. Instead of an OATS a Semi Anechoic Chamber was used where evidence was shown that the behaviour is the same. A maximum deviation of 1.38 dB for 13.56 MHz could be determined. This deviation is also taken into account in the presented result.
3. The measurement was performed at a measurement distance of 3 m where field strength of 67.90 dBuV/m was measured. This value was later extrapolated to a distance of 30 m by subtracting 40 dB from the result.
4. The measurement was performed with the Peak detector and since the EUT complies with the Quasi-peak limit even with the peak detector, therefore no further measurement with Quasi-peak detector was necessary.
5. A transducer factor was used on the spectrum analyser during measurement. This factor includes correction between the fixed gain of the magnetic loop antenna and the calibration values. It also includes the attenuation value of the RF cable used to connect the antenna to the spectrum analyser which was incorporated into the annual calibration of the magnetic loop antenna.

Transmitter Fundamental Field strength test setup

Open Area Test Site

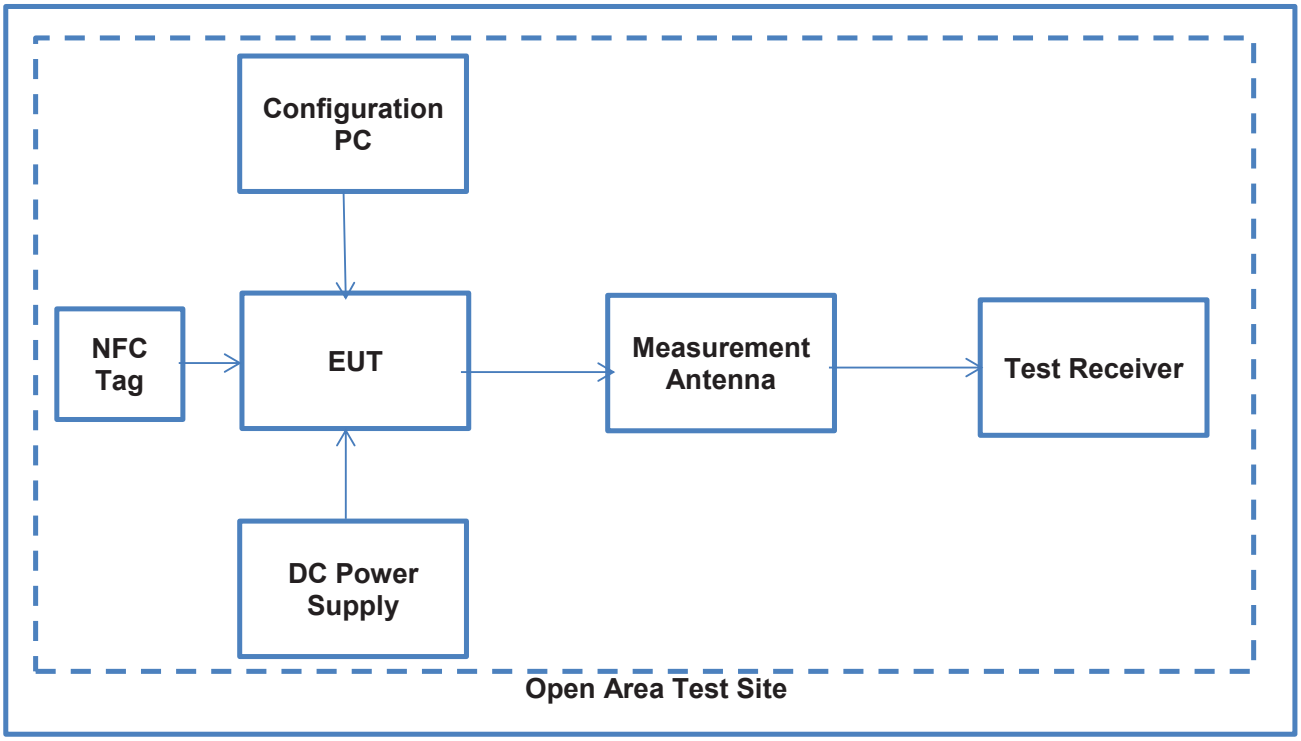

Semi Anechoic Chamber

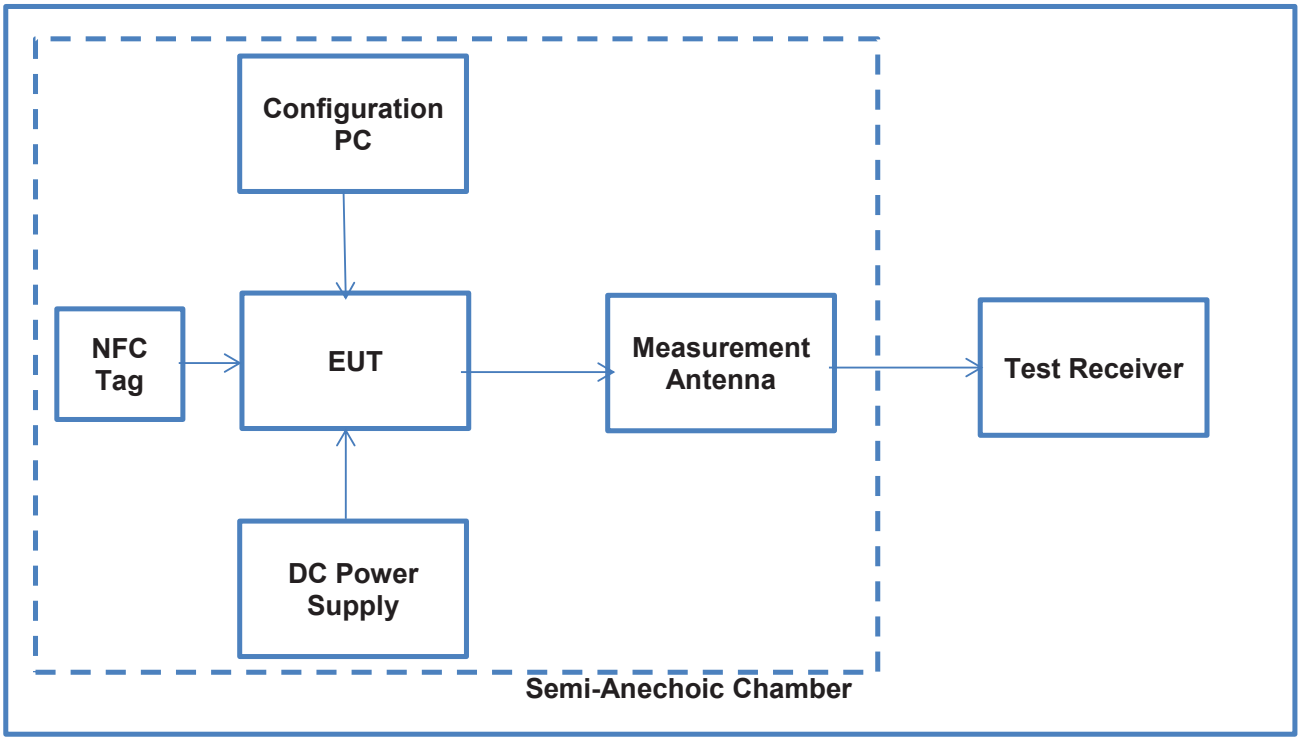

Results: Quasi Peak

Frequency (MHz)	Antenna Polarity	Level at 3 m (dBµV/m)	Level at 30 m (dBµV/m)	Deviation from OATS to SAC	Level at 30 m (dBµV/m) with deviation added	Limit at 30 m (dBµV/m)	Margin (dB)	Result
13.56	0° to EUT	67.90	27.90	1.38	29.28	84.0	54.72	Pass

Result: Pass

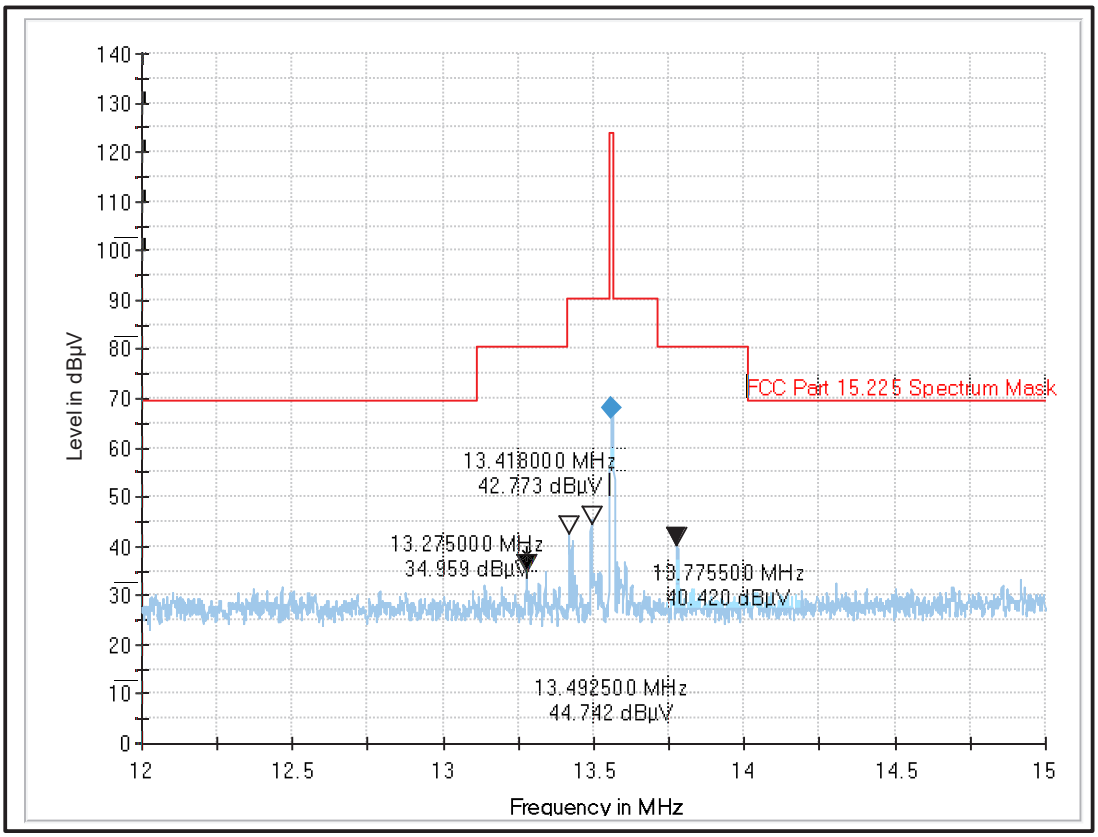

Plot 1: Fundamental Field Strength and spectrum mask measured at 3 meters

5.2.3. Transmitter Radiated Spurious Emissions

Test Summary:

Test Engineer:	Segun Adeniji	**Test Date:**	24 May 2018
Test Sample Serial Number:	010-926353		
Test Site Identification	SR 1/2		

FCC Reference:	Parts 15.225(d) & 15.209(a)
Test Method Used:	ANSI C63.10 Sections 6.3, 6.4 and 6.5
Frequency Range:	9 kHz to 1000 MHz

Environmental Conditions:

Temperature (°C):	23
Relative Humidity (%):	38

Settings of the Instrument

Frequency Range	RBW	VBW	Detector
9 kHz-150 kHz	300 Hz	1 KHz	Peak Detector
150 kHz-30 MHz	10 KHz	30 kHz	Peak Detector
30 MHz-1 GHz	100 kHz	300 kHz	Peak Detector

Note(s):

1. In accordance with FCC KDB 414788, an alternative test site may be used for the measurement. Therefore the result from the semi-anechoic chamber tests on 15th September 2017 is shown in this section of the test report.
2. The final measured value, for the given emission, in the table below incorporates the calibrated antenna factor and cable loss. Only spurious emissions in the range 30 MHz to 1 GHz were recorded. Markers were placed on the peaks found.
3. No spurious was found, only the system noise floor was observed and reported in the result table.
4. All emissions were greater than 20 dB below the applicable limit, below the noise floor of the measurement system or ambient.
5. Measurements were performed in a semi-anechoic chamber at a distance of 3 metres. The EUT was placed at a height of 80 cm above the reference ground plane in the centre of the chamber turntable. Between 30 MHz and 1 GHz, maximum emission levels were determined by height searching the measurement antenna over the range 1 metre to 4 metres.
6. A transducer factor was used on the spectrum analyser during open field tests. This factor includes correction between the fixed gain of the magnetic loop antenna and the calibration values. It also includes the value of the RF cable used to connect the antenna to the spectrum analyser which was incorporated into the annual calibration of the magnetic loop antenna.

Transmitter Radiated Spurious Emission test setup

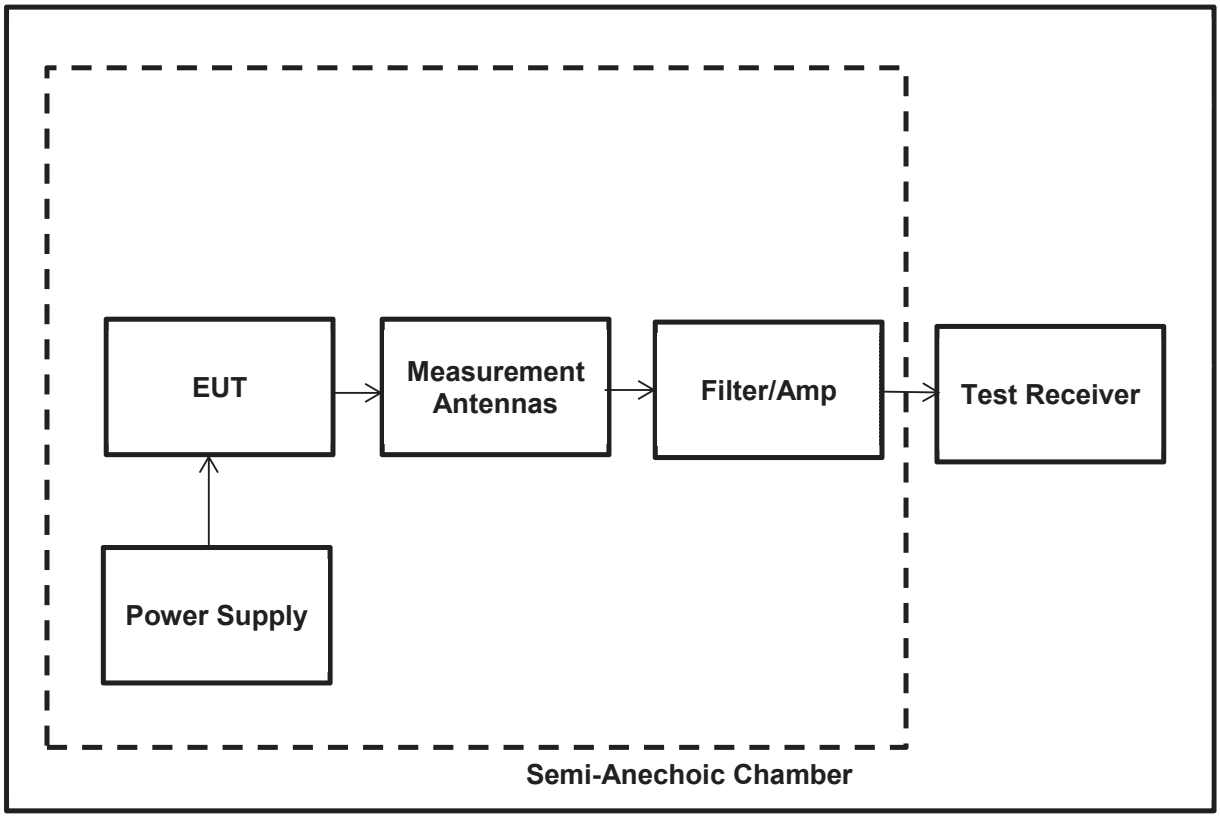

Results: Peak

Frequency (MHz)	Antenna Polarity	Level (dBμV/m)	Quasi Peak Limit (dBμV/m)	Margin (dB)	Result
1.40	Vertical	34.32	64.57	30.25	Complied
3.10	Vertical	34.32	70.00	35.68	Complied
13.27	Horizontal	38.22	70.00	31.78	Complied
57.72	Horizontal	15.42	40.0	24.58	Complied
473.86	Vertical	22.49	40.0	23.51	Complied
590.75	Vertical	24.97	40.0	21.03	Complied

Result: Pass

Transmitter Radiated Spurious Emissions (continued)

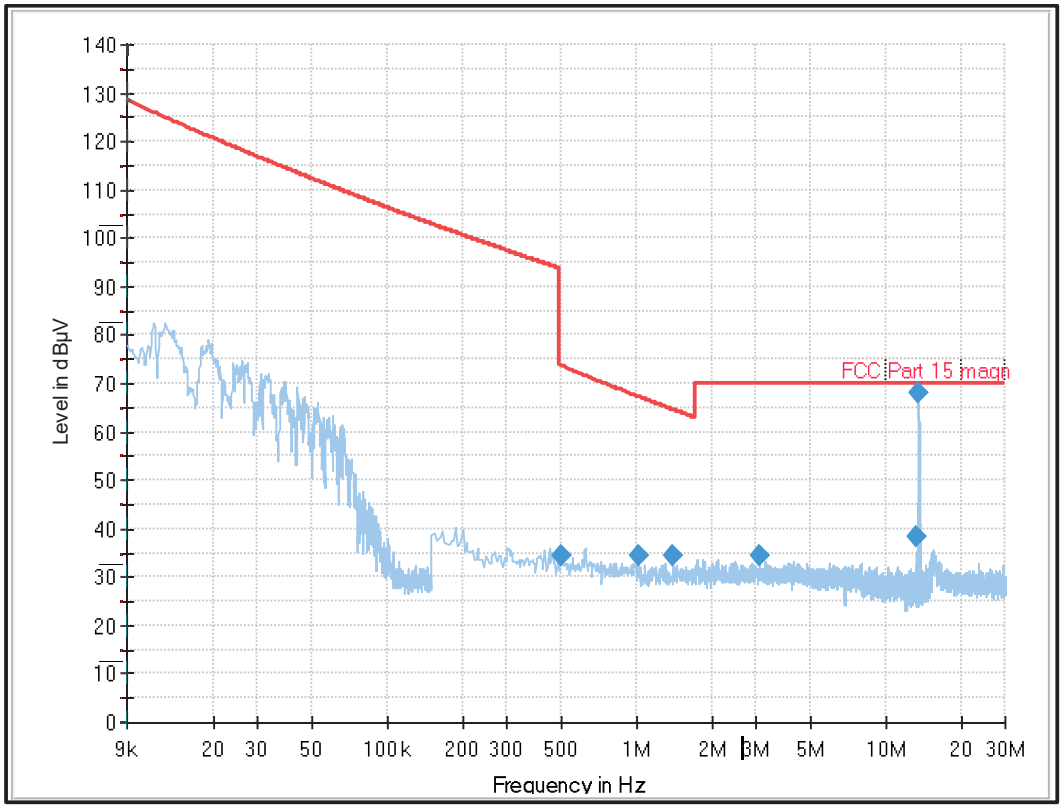

Plot 2: 9 kHz to 30 MHz/ Peak detector (worst case) / measured at 3 m in a semi-anechoic chamber

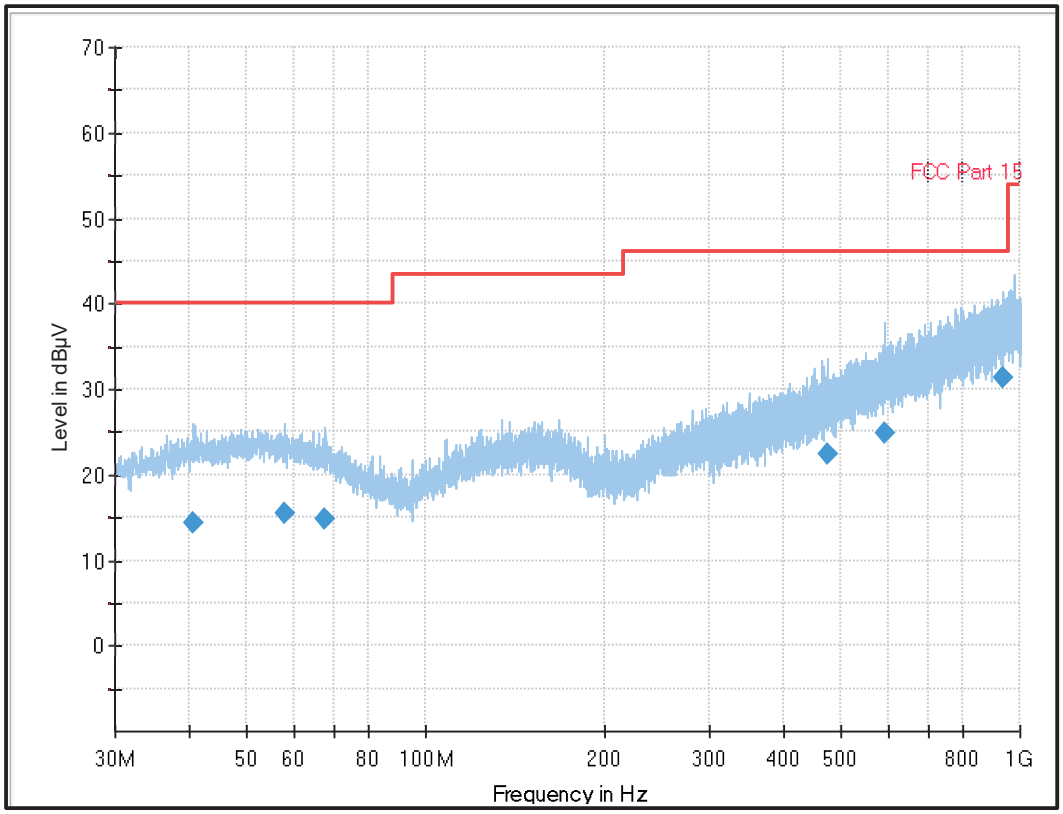

Plot 3: 30 MHz to 1 GHz/ Peak detector (worst case) / measured at 3 m in a semi-anechoic chamber
Note: These plots are pre-scans and for indication purposes only. For final measurements, see accompanying table.

5.2.4. Transmitter Frequency Stability (Temperature & Voltage Variation)

Test Summary:

Test Engineer:	Segun Adeniji	**Test Date:**	25 May 2018
Test Sample Serial Number:	010-926353		
Test Site Identification	SR 9		

FCC Reference:	Part 15.225(e)
Test Method Used:	ANSI C63.10 Section 6.8.1 and 6.8.2

Environmental Conditions:

Ambient Temperature (°C):	23
Ambient Relative Humidity (%):	31

Settings of the Instrument

RBW/VBW	300 Hz/1 kHz
Span	10 kHz
Sweep time	1 s
Detector	Peak

Note(s):

1. The measurement as performed with the EUT placed in the climatic chamber.
2. Frequency error was measured using a calibrated Rohde & Schwarz spectrum analyser.
3. Temperature was monitored throughout the test with a calibrated digital thermometer.

Transmitter Frequency Stability Emissions test setup for voltage

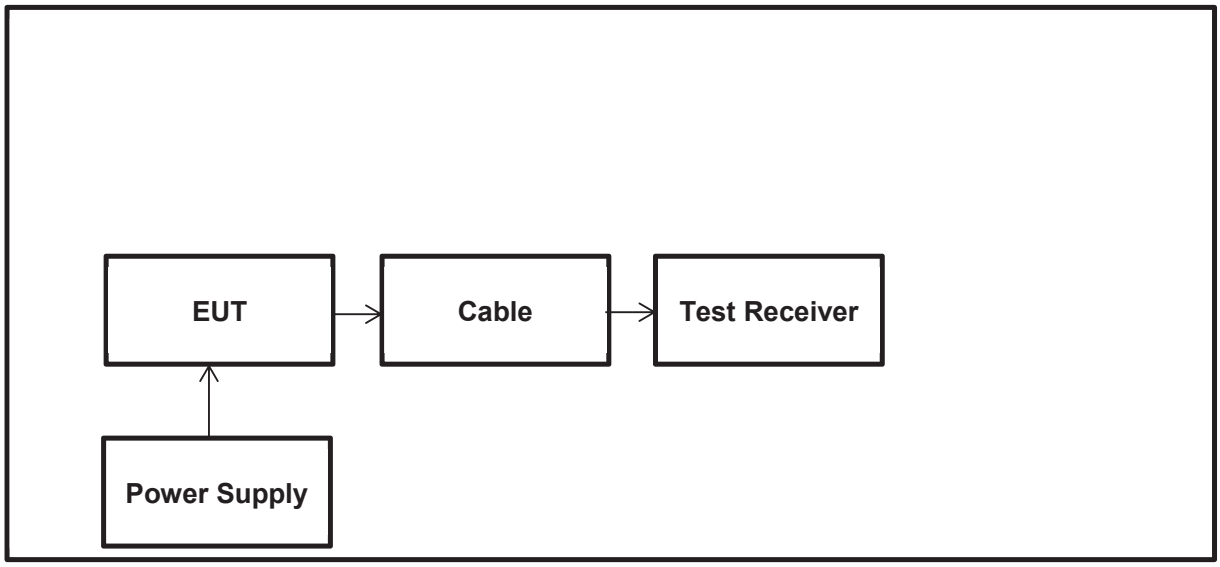

Transmitter Frequency Stability Emissions test setup for temperature

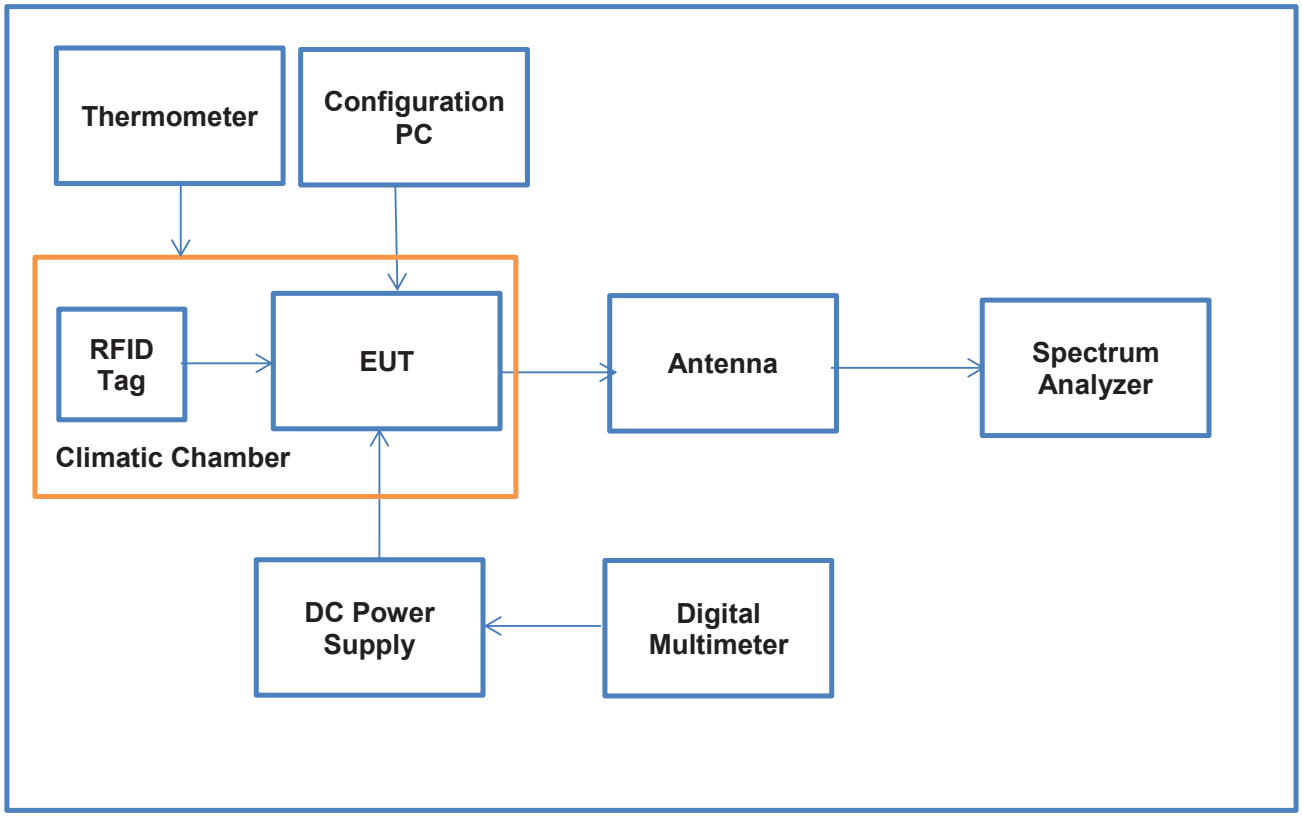

Results: Maximum frequency error of the EUT with variations in ambient temperature

EUT is battery operated equipment, the measurements have been perfomed with fully charged internal battery.

Carrier Frequency Variations (MHz)				
Temperature (°C)	Time after Start-up			
	0 minutes	2 minutes	5 minutes	10 minutes
-20	13.5603760	13.560377	13.5603765	13.560377
-10	13.5603760	13.560377	13.5603765	13.560377
0	13.5603620	13.560363	13.5603625	13.560363
5	13.5603465	13.5603475	13.560347	13.5603475
10	13.5603470	13.560348	13.5603475	13.560348
20	13.5603470	13.560348	13.5603475	13.560348
30	13.5603470	13.560348	13.5603475	13.560348
40	13.5603620	13.560363	13.5603625	13.560363
45	13.5603620	13.560363	13.5603625	13.560363
50	13.5603760	13.560377	13.5603765	13.560377

Frequency with Worst Case Deviation (MHz)	Frequency Error (Hz)	Frequency Error (%)	Limit (%)	Margin (%)	Result
13.560377	377	0.002780	0.01	0.007219	Complied

Result: Pass

Results: Maximum frequency error of the EUT with variations in Supply Voltage temperature

Carrier Frequency Variations (MHz)				
Temperature (°C)	Internal Battery Voltage			
	Nominal	85% of Nominal	115% of Nominal	End Voltage
	3.8 V DC	3.23 V DC*	4.37 V DC*	3.4 V DC
+ 23	13.5603485	--	-	13.560394
*85% & 115% of Nominal Voltage values are outside the Battery's operating voltage ranges				

Frequency with Worst Case Deviation (MHz)	Frequency Error (Hz)	Frequency Error (%)	Limit (%)	Margin (%)	Result
13.560377	394	0.002906	0.01	0.007094	Complied

Result: Pass

6. Measurement Uncertainty

The expression of uncertainty of a measurement result allows realistic comparison of results with reference values and limits given in specifications and standards.

The uncertainty of the result may need to be taken into account when interpreting the measurement results.

The reported expanded uncertainties below are based on a standard uncertainty multiplied by an appropriate coverage factor such that a confidence level of approximately 95% is maintained. For the purposes of this document “approximately” is interpreted as meaning “effectively” or “for most practical purposes”.

Measurement Type	Confidence Level (%)	Calculated Uncertainty
AC Conducted Spurious Emissions	95%	±2.49 dB
Transmitter Fundamental Field Strength	95%	±3.10 dB
Radiated Spurious Emissions	95%	±3.10 dB
Frequency Stability	95%	±92 Hz

The methods used to calculate the above uncertainties are in line with those recommended within the various measurement specifications. Where measurement specifications do not include guidelines for the evaluation of measurement uncertainty the published guidance of the appropriate accreditation body is followed.

7. Used equipment

Test site: SR 1/2

ID	Manufacturer	Type	Model	Serial No.	Calibration Date	Cal. Cycle
1	Rohde & Schwarz	Antenna, Loop	HFH2-Z2	831247/012	8/5/2016	36
350	Rohde & Schwarz	Receiver, EMI Test	ESIB7	836697/014	7/13/2017	12
377	Bonn Elektronik	Amplifier, Low Noise Pre	BLMA 0118-1A	025294B	7/11/2017	12
423	Bonn Elektronik	Amplifier, Low Noise Pre	BLMA 1840-1A	055929	7/12/2017	12
460	Deisl	Turntable	DT 4250 S		n/a	n/a
465	Schwarzbeck	Antenna, Trilog Broadband	VULB 9168	9168-240	8/8/2016	36
496	Rohde & Schwarz	Antenna, log. - periodical	HL050	100297	7/20/2016	24
587	Maturo	antenna mast, tilting	TAM 4.0-E	011/7180311	n/a	n/a
588	Maturo	Controller	NCD	029/7180311	n/a	n/a
591	Rohde & Schwarz	Receiver	ESU 40	100244/040	7/12/2017	12
608	Rohde & Schwarz	Switch Matrix	OSP 120	101227	4/8/2014	60
620	Bonn Elektronik	pre-amplifier	BLNA 0110-01N	1510111	7/12/2017	24
628	Maturo	Antenna mast	CAM 4.0-P	224/19590716	n/a	n/a
629	Maturo	Kippeinrichtung	KE 2.5-R-M	MAT002	n/a	n/a

Test site: SR 9

ID	Manufacturer	Type	Model	Serial No.	Calibration Date	Cal. Cycle
378	ESPEC/ Thermotec	Climatic Chamber	PL-1FT	5100869	08/09/2016	36
634	Rohde & Schwarz	Wireless Devices Test System	TS8997		7/11/2017	12
636	Rohde & Schwarz	switching unit	OSP120	101698	7/14/2017	12
637	Rohde & Schwarz	Spectrum Analyzer	FSV40	101587	7/11/2017	12
195	SPS	Power Supply	TOE8842-24	51455	Verified by Multimeter	12
216	Agilent	Multimeter	34401A	US36017458	7/11/2017	24

Test site: SR 7/8

ID	Manufacturer	Type	Model	Serial No.	Calibration Date	Cal. Cycle
22	Rohde & Schwarz	Artificial Mains	50 Ohm// 50uH	831767/014	7/12/2017	12
215	Rohde & Schwarz	Artificial Mains Network	9 kHz - 30 MHz; 3 phase	879675/002	7/12/2017	12
350	Rohde & Schwarz	Receiver, EMI Test	20 Hz - 7 GHz	836697/014	7/13/2017	12
616	Rohde & Schwarz	ISN	8 wire ISN for CAT6	101656	7/13/2017	12

8. Open-Area-Test Site comparison

GPS coordinates

48.765746, 9.250684

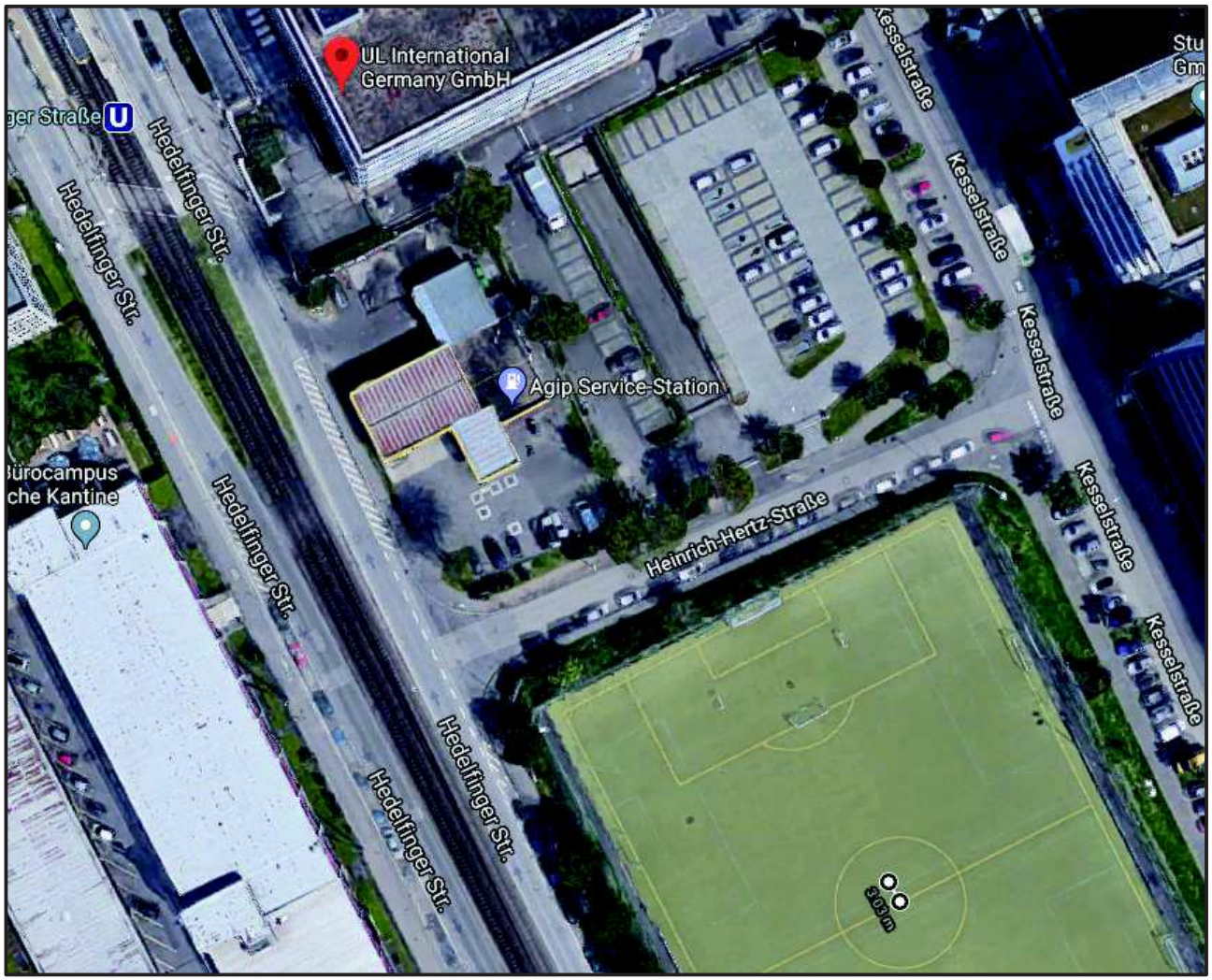

The following listed equipment was used for the measurement:

Manufacturer	Type	Model	Frequency Range
Rohde & Schwarz	Receiver, EMI Test	SML03	9 kHz – 30 MHz
Rohde & Schwarz	Receiver, EMI Test	ESIB7	20 Hz – 7 GHz
Rohde & Schwarz	Antenna, Loop	HFH2-Z2	1 kHz – 30 MHz
ETS LINDGREN	Antenna, Loop	6512	1 kHz – 30 MHz
Huber and Suhner	RF Cable	-	-
Elspec	BNC Cable	-	-

The transmit signal to the ETS Lindgren loop antenna is supplied by the SML signal generator.

The distance of the transmit and receive Antenna was 3 m. No other distances can be achieved in SR1 so 10m and 30m distances are not possible. Due to this no comparison is possible.

The Results are valid for equipment which is not larger as the loop antenna which represents in the comparison the EUT.
If an EUT is bigger measurements on an OATS are needed.

The measurement was performed on the lowest frequency 9 kHz and was increased by 10 kHz Steps up to 100 kHz. Then the step size was 100 kHz up to 1000 kHz. From 1 MHz up to the last frequency of 30 MHz the step size was 1 MHz. The HFH2-Z2 loop antenna placed at 80 cm height was used as the receive antenna. The intercepted RF signal from this antenna was measured with the ESIB7 Test Receiver and the values were recorded accordingly.

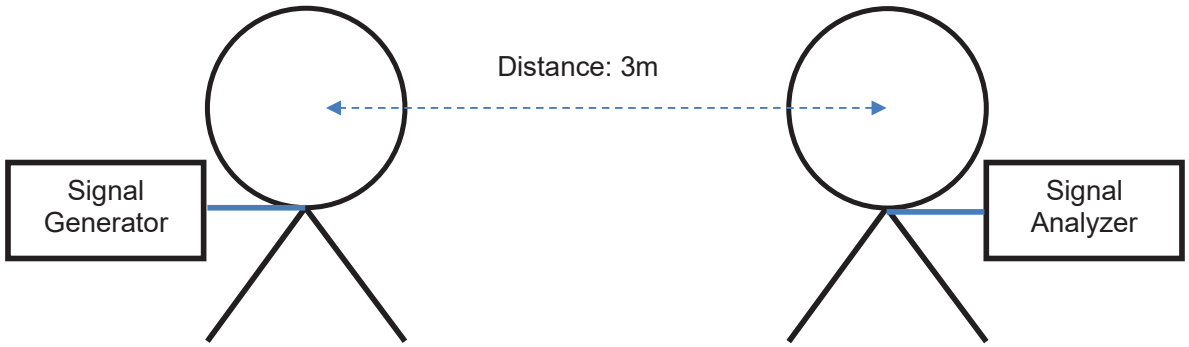

Numeric values

Frequency (MHz)	**0.01**	**0.02**	**0.03**	**0.04**	**0.05**	**0.06**	**0.07**	**0.08**	**0.09**	**0.10**	**0.125**	**0.20**
SR1 Measured power (dBµV)	87.91	87.22	87.01	86.98	86.40	86.32	85.98	85.20	84.30	83.80	82.96	82.55
OATS Measured power (dBµV)	86.22	87.42	87.50	86.49	86.01	85.39	84.32	84.29	84.20	83.10	83.60	82.32
Delta (dB)	-1.69	0.20	0.49	-0.49	-0.39	-0.93	-1.66	-0.91	-0.10	-0.70	0.64	-0.23

Frequency (MHz)	**0.30**	**0.40**	**0.50**	**0.60**	**0.70**	**0.80**	**0.90**	**1.00**	**2.00**	**3.00**	**4.00**	**5.00**
SR1 Measured power (dBµV)	81.98	81.23	80.39	80.00	79.53	79.10	78.87	78.20	77.60	77.01	76.32	76.04
OATS Measured power (dBµV)	80.84	80.49	79.58	79.58	78.85	78.59	77.69	77.50	77.91	76.90	75.45	74.90
Delta (dB)	-1.14	-0.74	-0.81	-0.42	-0.68	-0.51	-1.18	-0.70	0.31	-0.11	-0.87	-1.14

Frequency (MHz)	**6.00**	**7.00**	**8.00**	**9.00**	**10.00**	**11.00**	**12.00**	**13.00**	**13.56**	**14.00**	**15.00**	**16.00**
SR1 Measured power (dBµV)	75.98	75.43	75.20	74.97	74.59	74.32	74.05	73.83	73.50	73.22	73.20	73.05
OATS Measured power (dBµV)	74.94	74.09	74.11	73.58	73.87	74.38	74.84	74.31	74.88	74.29	73.90	73.93
Delta (dB)	-1.04	-1.34	-1.09	-1.39	-0.72	0.06	0.79	0.48	1.38	1.07	0.70	0.88

Frequency (MHz)	**17.00**	**18.00**	**19.00**	**20.00**	**21.00**	**22.00**	**23.00**	**24.00**	**25.00**	**26.00**	**27.00**	**28.00**	**29.00**	**30.00**
SR1 Measured power (dBµV)	73.00	72.86	72.74	72.64	72.50	72.52	72.39	72.20	72.04	71.97	71.86	71.64	71.41	71.27
OATS Measured power (dBµV)	73.70	73.98	72.90	72.60	72.45	72.34	72.59	72.59	71.97	71.59	71.58	71.88	71.98	72.49
Delta (dB)	0.70	1.12	0.16	-0.04	-0.05	-0.18	0.20	0.39	-0.07	-0.38	-0.28	0.24	0.57	1.22

Graph

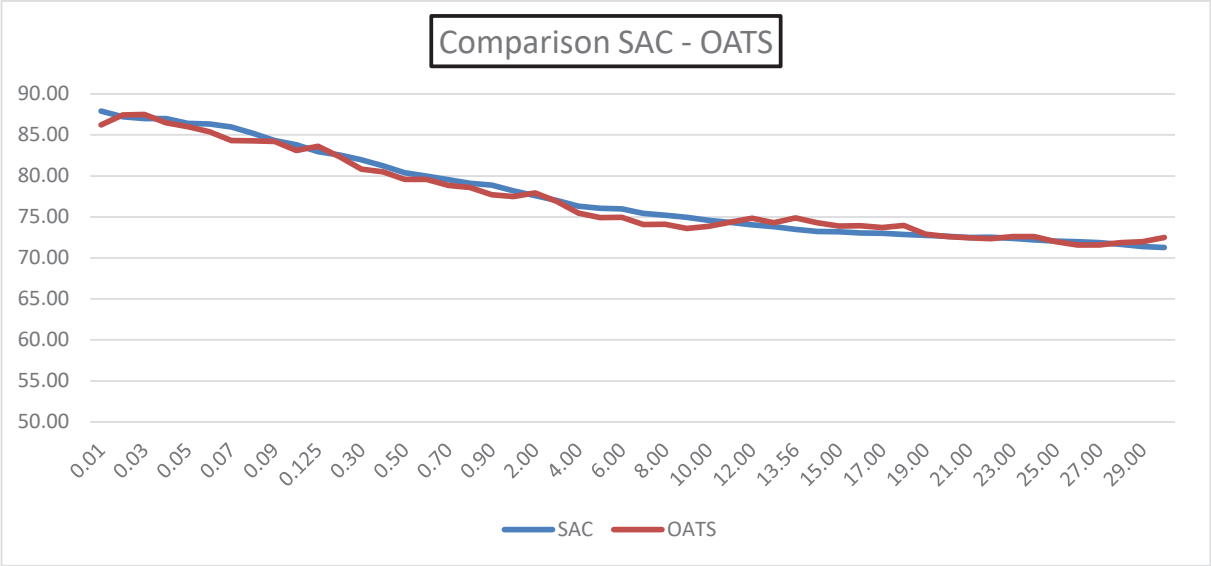

Conclusion: Maximum difference is 1.69 dB @ 9 kHz

9. Report Revision History

Version Number	Revision Details		
	Page No(s)	Clause	Details
1.0	31	-	Initial Version