TRAC™ TRAC

OWNER'S MANUAL

©2015 Safe Community Institute

Ver: HW15071717191

TABLE OF CONTENTS

Introduction 4

Specifications 6

Preparation 9

Configuration 10

Operating Instructions 11

Precautions 15

Calibration 16

Optional Smart Phone Data Collection 17

Disclaimer 18

FCC ID
Note 19

INTRODUCTION

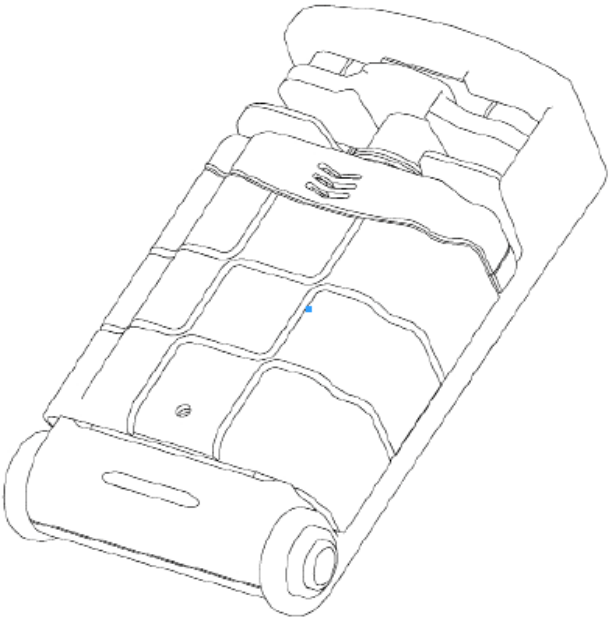

The **TRAC** is a portable breath alcohol tester with an advanced high-technology electrochemical sensor providing law enforcement with the most accurate alcohol concentration value and its strongest anti-interference capability. The optional *Smart Phone Data Collection* functionality allows law

enforcement to record, store and present data, including GPS test location and photo verification with facial recognition, for maximum benefit in court testimony. Together the advanced sensor and optional Smart Phone functionality provide law enforcement with comprehensive, evidence-based, chain of custody documentation that bolsters prosecution—making the TRAC new standard in law enforcement.

SPECIFICATIONS

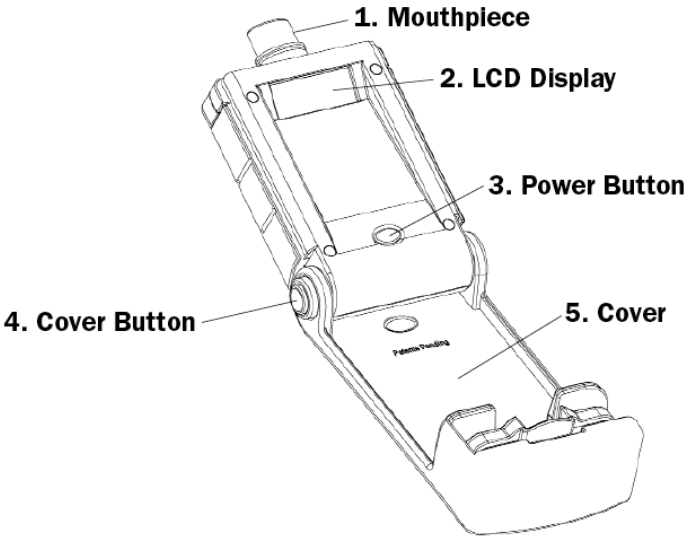

- Advanced 16 bit low power consumption MCU
- Reliable and accurate Electrochemical Sensor (Fuel Cell)
- Evidentiary grade analysis
- LCD display
- LED power indicator
- Single key operation

- Blowing error warning
- Short warm-up time, fast response and resume
- Rechargeable battery
- Power saving design
- Rugged ABS and TPE construction with protective cover
- Optional Smart Phone Data Collection module

Technical Data

Sensor type: Precise and linear Electrochemical Sensor (Fuel Cell)

Detection Range: 0.000~0.400%BAC

Resolution: 0.001%BAC

Display: 1.3 inch LCD screen

LED: 3 colors to indicate messages or alerts

Operating range: temperature: 32F to 104F (0°C~40°C)

Humidity: 15~95%RH (No Dews)

Storage conditions: 14F to 140F (-10°C~60°C)

Battery: 550mAh Li battery

Dimensions closed: 5 ⅛x2 ¾ x1 ¼ in. (130×69×31.5mm)

Weight: 5.3 oz. (150g)

Charging the Battery

The TRAC comes with a rechargeable battery that last up to 30 days and more than 100 tests. Before use fully charge the device with the accompanying charger. The T R A C has two ways of indicating the battery needs to be recharged. The LCD display will indicate the state of charge and there is an additional LED that will display yellow when the battery needs recharging. Additionally, in the optional *Smart Phone Data Collection Mode* a message will appear on the Smart Phone when the application is launched.

CONFIGURATION

Display

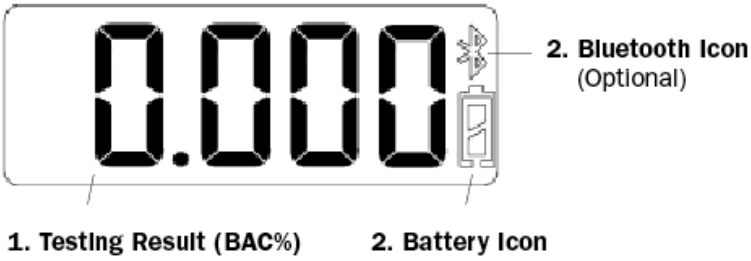

NOTE: The battery icon will flash when the battery is low indicating it is time to recharge. If the battery capacity is too low the tester will not turn on. The Bluetooth indicator will illuminate when the optional *Smart Phone Data Collection* application is active.

OPERATING INSTRUCTIONS

Wait 20 minutes after eating, drinking or smoking before submitting a test to prevent device damage.

1. Open the cover by pressing the *Cover Button* and then install the mouthpiece sleeve on the mouthpiece. The mouthpiece sleeve is for hygiene purposes; its use will not alter the BAC reading.

2. Press the *Power Button* to power on the TRAC. You will hear a brief buzzer sound and the *LCD Display* will show "- - - - -".

3. Because calibration is imperative to accurate BAC readings, the TR A C has a means of insuring you are aware of needed calibration well in advance. At power on if there are less than 30 days

before the next calibration is due the *LCD Display* will inform you by briefly displaying the word "due" with the number of days left; such as duE30, duE29…duE01. The number in the display indicates the days remaining before calibration is due. After this brief notification the *LCD Display* will show "- - - - -".

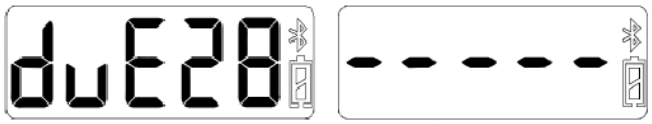

4. Press the *Power Button* again to submit a Breath Test. The *LCD Display* will countdown from 10 to 0 and then show a moving "BLO" icon. This is your cue to take a deep breath and then blow into the mouthpiece continuously and equally and only stop when you hear a sound

from the TRAC. Within a few seconds the *LCD Display* will indicate the BAC result.

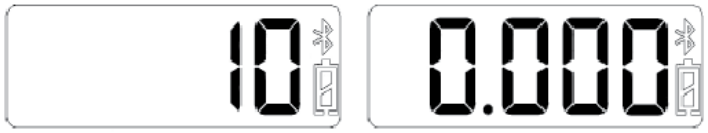

5. If the *LCD Display* shows "Err0" this is an error message and an indication that there was an insufficient breath flow rate or an interruption in the blowing. Please resubmit your breath sample. If the breath sample is successful the *Display* will show the Breath Alcohol Concentration as a percentage value.

6. Another test may be submitted by pressing the *Power Button*.

7. The TRAC will automatically power down after 150 seconds.

FCC ID NOTE

This device complies with Part 15 of the FCC Rules. Operation is subject to the following two conditions: (1) this device may not cause harmful interference, and (2) this device must accept any interference received, including interference that may cause undesired operation.
This device and its antenna(s) must not be co-located or operating in conjunction with any other antenna transmitter.
Changes or modifications not expressly approved by the party responsible for compliance could void the user's authority to operate the equipment.
Note: This equipment has been tested and found to comply with the limits for a Class B digital device, pursuant to part 15 of the FCC Rules. These limits are designed to provide reasonable protection against harmful interference in a residential installation. This equipment

generates, uses and can radiate radio frequency energy and, if not installed and used in accordance with the instructions, may cause harmful interference to radio communications. However, there is no guarantee that interference will not occur in a particular installation. If this equipment does cause harmful interference to radio or television reception, which can be determined by turning the equipment off and on, the user is encouraged to try to correct the interference by one or more of the following measures:

—Reorient or relocate the receiving antenna.

Increase the separation between the equipment and receiver.

Connect the equipment into an outlet on a circuit different from that to which the receiver is connected.

Consult the dealer or an experienced radio/TV technician for help.

PRECAUTIONS

- **Please read this manual carefully and follow the instructions before operating.**
- **Wait 20 minutes after eating, drinking or smoking before submitting a test.**
- **Keep the device in calibration as recommended in this Owner's Manual detailed below.**
- **Do not blow smoke into the T R A C directly as this will cause damage.**
- **Avoid using the TRAC in temperatures below 32°F or above 104°F (0-40°C).**

CALIBRATION

Calibration is important to maintaining the accuracy of the TRAC and is recommended every 1500 tests, but not more than every 365 days. To insure timely calibrations the TRAC has a count down timer that, beginning 30 days before the due date, will display the days remaining before calibration is due. For calibration or support please call 800-208-3244.

OPTIONAL SMART PHONE DATA COLLECTION

Contact Safe Community Institute at 800-208-3244 to learn how to register, access and implement the data collection module through a smart phone app.

DISCLAIMER

Safe Community Institute, its resellers, agents or employees, make no warranties, express or implied, individually or collectively, as to the ability of this product to determine whether, or to the extent to which, a test subject's mental or physical functioning, or judgment, may be impaired by blood alcohol including whether the test subject is intoxicated under any definition of that word. A low BAC reading does not mean that the test subject's physical or mental performance or judgment, including reaction times, can respond to an emergency. TO THE EXTENT PERMITTED BY LAW, SAFE COMMUNITY INSTITUTE, ITS RESELLERS, AGENTS OR EMPLOYEES ARE NOT INDIVIDUALLY OR COLLECTIVELY RESPONSIBLE FOR DIRECT, SPECIAL, INCIDENTAL OR CONSEQUENTIAL DAMAGES UNDER ANY LEGAL THEORY, INCLUDING BUT NOT LIMITED TO LOSS OF USE; LOSS OF REVENUE OR INCOME; LOSS OF ACTUAL OR ANTICIPATED PROFITS (INCLUDING LOSS OF PROFITS FROM A CONTRACT); LOSS OF THE USE OF MONEY; LOSS OF ANTICIPATED SAVINGS; LOSS OF BUSINESS; LOSS OF OPPORTUNITY; LOSS OF GOODWILL; OR LOSS OF REPUTATION. IF ANY TERM IS HELD TO BE ILLEGAL OR UNENFORCEABLE, THE LEAGALITY OR ENFORCEABILITY OF THE REMAINING TERMS SHALL NOT BE AFFECTED OR IMPAIRED.

20 N. Wacker Drive Suite 4015
Chicago, IL 60601
(312) 251-7004