15.19 compliance statement, see manual and packaging

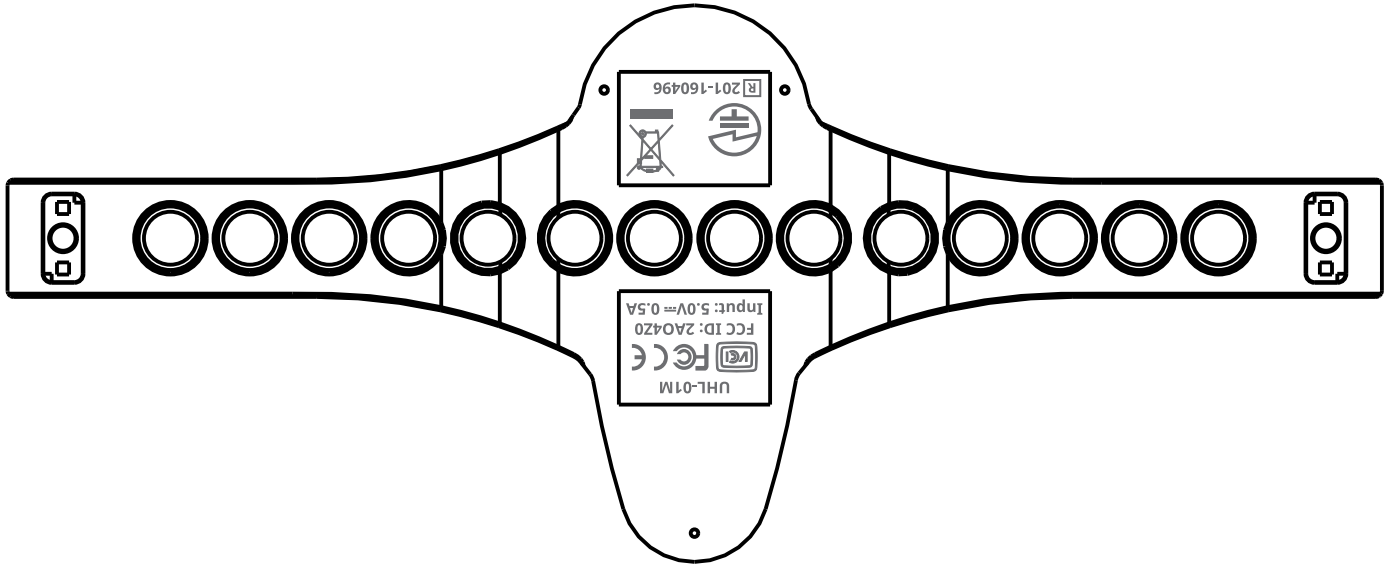

PANTONE 7530 C
CMYK 10 18 25 32

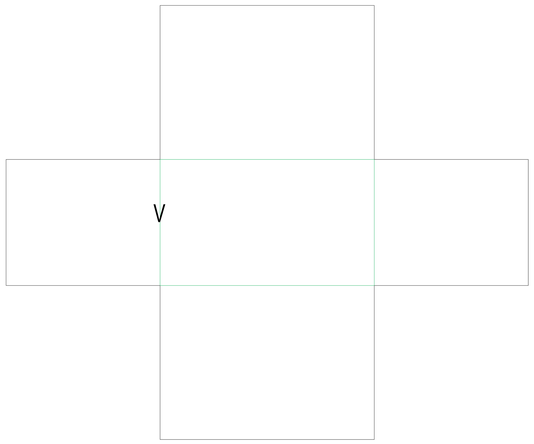

1200g 2mm
Bottom

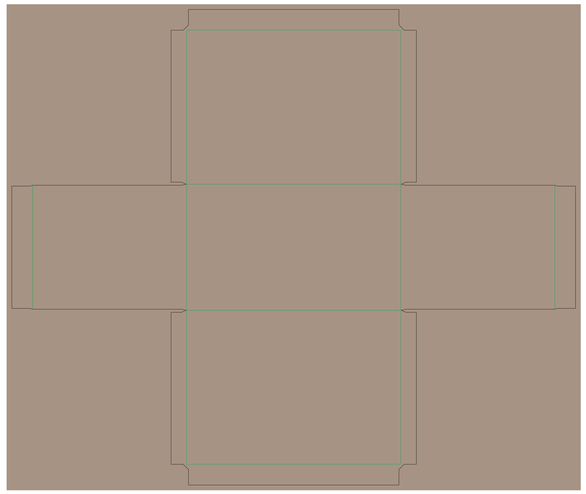

157gC2S

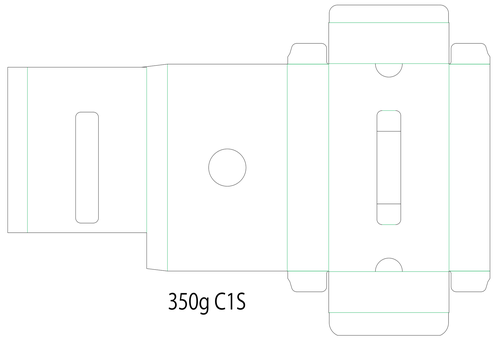

350g C1S

350g C1S

PANTONE 7530 C
CMYK 10 18 25 32

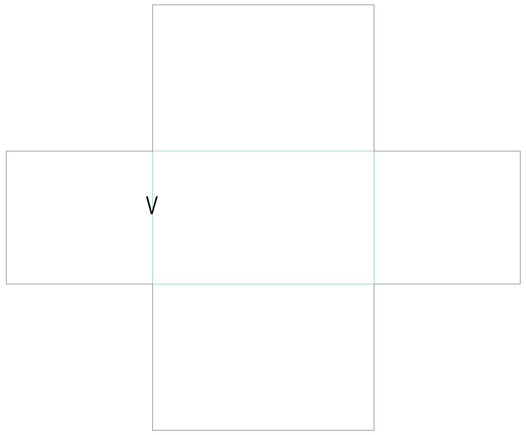

1200g 2mm
TOP

157gC2S

QSG 250g FRONT

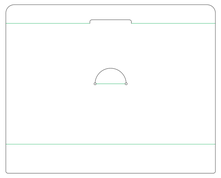

350g C1S

QSG 250g BACK

C M Y K PANTONE 7530 C

GPA GLOBAL INNOVATING SOLUTIONS	Customer: BRNC	Style: BRNC17003	Date: 2017/12/05
	CAD#:	Size:	Total Rule:
	Description:	Stock:	View:
	Prepress Designer : Anna	Grain/Flute:	Reference:

CARD & RIGID BOX卡盒/手工盒		CUT LINE 切☒	CUSTOMER NAME	BRNC	UNIT	ANGLE
DIMENSION	TOLERANCE	PRESS LINE 折☒	PROJECT NO.	BRNC-17003		
0~200 mm	±0.5mm	PERFORATE LINE 刀☒☒	PD NAME	Bonnie	mm	
200~400 mm	±1.0mm	HALF CUT LINE 半穿☒	MATERIAL(COLOR)			
400mm+	±1.5mm	EASY OPEN LINE 撕裂切☒	FINISH(COLOR)		GPA GLOBAL INNOVATING SOLUTIONS	
胶片盒，胶片内卡，卡纸类内卡贴纸等薄片类刀模成型均适用		GLUE AREA 粘合☒	DRAWING BY	Kathy		
		CUT AREA 切除☒	APPROVED BY			
		CORRUGATED DIRECTION 坑☒☒	DATE	2017.11.28	Version	B V10