TEST REPORT

FCC ID: 2AO6VTQ604AUTO

Product: KANOPI 4G ROUTER

Model No.: TQ604AUTO

Additional Model No.: TQ666,TQ604,TQ986

Trade Mark: KANOPI

Report No.: TCT180207E007

Issued Date: Mar. 13, 2018

Issued for:

Indigital Technologies LLP

502, Silver Square, Dattatray Road, Santacruz West Mubai, 400054 India

Issued By:

Shenzhen Tongce Testing Lab.

1F, Leinuo Watch Building, Fuyong Town, Baoan Dist, Shenzhen, China

TEL: +86-755-27673339

FAX: +86-755-27673332

Note: *This report shall not be reproduced except in full, without the written approval of Shenzhen Tongce Testing Lab. This document may be altered or revised by Shenzhen Tongce Testing Lab. personnel only, and shall be noted in the revision section of the document. The test results in the report only apply to the tested sample.*

TABLE OF CONTENTS

1. Test Certification 3
2. Test Result Summary 3
3. EUT Description 5
4. Genera Information 7
4.1. Test environment and mode 7
4.2. Test Mode 11
4.3. Description of Support Units 13
4.4. Configuration of Tested System 13
4.5. Measurement Results Explanation Example 13
5. Facilities and Accreditations 14
5.1. Facilities 14
5.2. Location 14
5.3. Measurement Uncertainty 14
6. Test Results and Measurement Data 15
6.1. Conducted Output Power Measurement 15
6.2. Peak to Average Ratio 16
6.3. 99% Occupied Bandwidth and 26dB Bandwidth Measurement 17
6.4. Band Edge and Conducted Spurious Emission Measurement 18
6.5. Field Strength of Spurious Radiation Measurement 19
6.6. Frequency Stability Measurement 21
Appendix A: Photographs of Test Setup
Appendix B: Photographs of EUT
Test Data for Band 2, Band 4 and Band 12

1. Test Certification

Product:	KANOPI 4G ROUTER
Model No.:	TQ604AUTO
Additional Model:	TQ666,TQ604,TQ986
Trade Mark:	**KANOPI**
Applicant:	Indigital Technologies LLP
Address:	502, Silver Square, Dattatray Road, Santacruz West Mubai, 400054 India
Manufacturer:	Shenzhen Tengqingfeng Technology Co., Ltd.
Address:	C1702 NANFANG BUILDING NO.122 LuoFang Road Luohu District, Shenzhen, China
Date of Test:	Feb. 08, 2018 – Mar. 12, 2018
Applicable Standards:	FCC CFR Title 47 Part 2 FCC CFR Title 47 Part 22 FCC CFR Title 47 Part 24 FCC CFR Title 47 Part 27

The above equipment has been tested by Shenzhen Tongce Testing Lab. and found compliance with the requirements set forth in the technical standards mentioned above. The results of testing in this report apply only to the product/system, which was tested. Other similar equipment will not necessarily produce the same results due to production tolerance and measurement uncertainties.

Tested By: Jin Wang ***Date:*** ***Mar. 12, 2018***

Jin Wang

Reviewed By: ***Date:*** ***Mar. 13, 2018***

Approved By: ***Date:*** ***Mar. 13, 2018***

Tomsin

2. Test Result Summary

Requirement	CFR 47 Section	Result
Conducted Output Power	§2.1046; §22.913; §24.232(c); §27.50(d); §27.50(c); §27.50(b);	PASS
Peak-to-Average Ratio	§2.1046; §24.232(d) §27.50(d); §27.50(c); §27.50(b);	PASS
Effective Radiated Power	§2.1046; §22.913; §24.232(c); §27.50(d); §27.50(c); §27.50(b);	PASS
Equivalent Isotropic Radiated Power	§2.1046; §22.913; §24.232(c); §27.50(d); §27.50(c); §27.50(b);	PASS
Occupied Bandwidth	§2.1049; §24.238(b); §27.53;	PASS
Band Edge	§2.1051; §22.917(a); §27.53(h); §27.53(c); §27.53(g); §24.238(a);	PASS
Conducted Spurious Emission	§2.1051; §22.917(a); §27.53(h); §27.53(g); §27.53(c); §24.238(a);	PASS
Field Strength of Spurious Radiation	§2.1053; §22.917(a); §27.53(g) ; §27.53(c); §27.53(h); §24.238(a);	PASS
Frequency Stability for Temperature & Voltage	§2.1055;§22.355; §27.54; §24.235;	PASS

Note:

1. PASS: Test item meets the requirement.

2. Fail: Test item does not meet the requirement.

3. N/A: Test case does not apply to the test object.

4. The test result judgment is decided by the limit of test standard.

3. EUT Description

Product:	KANOPI 4G ROUTER
Model No.:	TQ604AUTO
Additional Model:	TQ666,TQ604,TQ986
Trade Mark:	**KANOPI**
Tx Frequency: (UP)	LTE Band 2: 1850 MHz ~ 1910 MHz LTE Band 4: 1710 MHz ~ 1755 MHz LTE Band 12: 699 MHz ~ 716 MHz
Rx Frequency: (DO)	LTE Band 2: 1930 MHz ~ 1990 MHz LTE Band 4: 2110 MHz ~ 2155 MHz LTE Band 12: 729 MHz ~ 746 MHz
Bandwidth:	LTE Band 2: 1.4MHz /3MHz /5MHz /10MHz /15MHz / 20MHz LTE Band 4: 1.4MHz /3MHz /5MHz /10MHz /15MHz / 20MHz LTE Band 12: 1.4MHz /3MHz /5MHz /10MHz
Maximum Output Power to Antenna:	LTE Band 2: 22.82dBm LTE Band 4: 22.90dBm LTE Band 12: 23.75dBm
99% Occupied Bandwidth:	LTE Band 2: 17M8W7D LTE Band 4: 17M9W7D LTE Band 12: 8M94G7D
Type of Modulation:	QPSK / 16QAM
Antenna Type:	Internal Antenna
Antenna Gain:	LTE Band 2: 8dBi, LTE Band 4: 8dBi, LTE Band 12: 8dBi,
Adapter:	Adapter Information: Model: YMK-12W050200 Input: AC100-240VAC, 0.3A, 50/60Hz Output: DC5.0V, 2A
Remark:	All models above are identical in interior structure, electrical circuits and components, and just the appearance color is different for the marketing requirement.

Emission Designator

LTE Band 2	QPSK		16QAM	
BW(MHz)	Emission Designator (99%OBW)	Maximum EIRP(W)	Emission Designator (99%OBW)	Maximum EIRP(W)
1.4	1M08G7D	1.208	1M08W7D	1.035
3	2M69G7D	1.079	2M69W7D	0.986
5	4M48G7D	1.094	4M48W7D	0.815
10	8M94G7D	1.104	8M93W7D	1.000
15	13M4G7D	1.104	13M4W7D	1.021
20	17M8G7D	1.159	17M8W7D	0.834
LTE Band 4	**QPSK**		**16QAM**	
BW(MHz)	**Emission Designator (99%OBW)**	**Maximum EIRP(W)**	**Emission Designator (99%OBW)**	**Maximum EIRP(W)**
1.4	1M08G7D	1.148	1M08W7D	0.942
3	2M69G7D	1.104	2M68W7D	0.989
5	4M48G7D	1.130	4M48W7D	0.838
10	8M94G7D	1.140	8M93W7D	1.067
15	13M4G7D	1.143	13M4W7D	1.012
20	17M9G7D	1.230	17M9W7D	0.904
LTE Band 12	**QPSK**		**16QAM**	
BW(MHz)	**Emission Designator (99%OBW)**	**Maximum EIRP(W)**	**Emission Designator (99%OBW)**	**Maximum EIRP(W)**
1.4	1M08G7D	1.390	1M08W7D	1.156
3	2M69G7D	1.355	2M69W7D	1.233
5	4M48G7D	1.496	4M48W7D	1.079
10	8M94G7D	1.416	8M94W7D	1.259

4. Genera Information

4.1. Test environment and mode

Operating Environment:	
Temperature:	24.0 °C
Humidity:	54 % RH
Atmospheric Pressure:	1010 mbar
Test Mode:	
Operation mode:	Keep the EUT in continuous transmitting with modulation
The sample was placed 0.8m above the ground plane of 3m chamber. Measurements in both horizontal and vertical polarities were performed. During the test, each emission was maximized by: having the EUT continuously working, investigated all operating modes, rotated about all 3 axis (X, Y & Z) and considered typical configuration to obtain worst position, manipulating interconnecting cables, rotating the turntable, varying antenna height from 1m to 4m in both horizontal and vertical polarizations. The emissions worst-case are shown in Test Results of the following pages.	

Description Operation Frequency

LTE Band 2(1.4MHz)		LTE Band 2(3MHz)	
Channel	Frequency (MHz)	Channel	Frequency (MHz)
18607	1850.7	18615	1851.5
18608	1850.8	18616	1851.6
….	….	….	….
18899	1879.9	18899	1879.9
18900	1880.0	18900	1880.0
18901	1880.1	18901	1880.1
…	…	…	…
19192	1909.2	19184	1908.4
19193	1909.3	19185	1908.5
LTE Band 2(5MHz)		LTE Band 2(10MHz)	
Channel	Frequency (MHz)	Channel	Frequency (MHz)
18625	1852.5	18650	1855.0
18626	1852.6	18651	1855.1
….	….	….	….
18899	1879.9	18899	1879.9
18900	1880.0	18900	1880.0
18901	1880.1	18901	1880.1
…	…	…	…
19174	1907.4	19149	1904.9
19175	1907.5	19150	1905.0
LTE Band 2(15MHz)		LTE Band 2(20MHz)	
Channel	Frequency (MHz)	Channel	Frequency (MHz)
18675	1857.5	18700	1860.0
18676	1857.6	18701	1860.1
….	….	….	….
18899	1879.9	18899	1879.9
18900	1880.0	18900	1880.0
18901	1880.1	18901	1880.1
…	…	…	…
19124	1902.4	19099	1899.9
19125	1902.5	19100	1900.0

LTE Band 4(1.4MHz)		LTE Band 4(3MHz)	
Channel	Frequency (MHz)	Channel	Frequency (MHz)
19957	1710.70	19965	1711.50
19958	1710.80	19966	1711.60
….	….	….	….
20174	1732.40	20174	1732.40
20175	1732.50	20175	1732.50
20176	1732.60	20176	1732.60
…	…	…	…
20392	1754.20	20384	1753.40
20393	1754.30	20385	1753.50
LTE Band 4(5MHz)		LTE Band 4(10MHz)	
Channel	Frequency (MHz)	Channel	Frequency (MHz)
19975	1712.50	20000	1715.00
19976	1712.60	20001	1715.10
….	….	….	….
20174	1732.40	20174	1732.40
20175	1732.50	20175	1732.50
20176	1732.60	20176	1732.60
…	…	…	…
20374	1752.40	20349	1749.90
20375	1752.50	20350	1750.00
LTE Band 4(15MHz)		LTE Band 4(20MHz)	
Channel	Frequency (MHz)	Channel	Frequency (MHz)
20025	1717.50	20050	1720.00
20026	1717.60	20051	1720.10
….	….	….	….
20174	1732.40	20174	1732.40
20175	1732.50	20175	1732.50
20176	1732.60	20176	1732.60
…	…	…	…
20324	1747.40	20299	1744.90
20325	1747.50	20300	1745.00

LTE Band 12(1.4MHz)		LTE Band 12(3MHz)	
Channel	Frequency (MHz)	Channel	Frequency (MHz)
23017	699.7	23025	700.5
23016	699.8	23026	700.6
….	….	….	….
23094	707.4	23094	707.4
23095	707.5	23095	707.5
23096	707.6	23096	707.6
…	…	…	…
23172	715.2	23164	714.4
23173	715.3	23165	714.5
LTE Band 12(5MHz)		LTE Band 12(10MHz)	
Channel	Frequency (MHz)	Channel	Frequency (MHz)
23035	701.5	23060	704
23036	701.6	23061	704.1
….	….	….	….
23094	707.4	23094	707.4
23095	707.5	23095	707.5
23096	707.6	23096	707.6
…	…	…	…
23154	713.4	23129	710.9
23155	713.5	23130	711

4.2. Test Mode

All modes and data rates and positions were investigated.
Test modes are chosen to be reported as the worst case configuration below:

Test Mode		
Band	**Radiated TCs**	**Conducted TCs**
LTE Band 2	QPSK Link (1.4MHz / 3MHz / 5MHz / 10MHz / 15MHz / 20MHz)	16QAM Link (1.4MHz / 3MHz / 5MHz / 10MHz / 15MHz / 20MHz)
LTE Band 4	QPSK Link (1.4MHz / 3MHz / 5MHz / 10MHz / 15MHz / 20MHz)	16QAM Link (1.4MHz / 3MHz / 5MHz / 10MHz / 15MHz / 20MHz)
LTE Band 12	QPSK Link (1.4MHz / 3MHz / 5MHz / 10MHz)	16QAM Link (1.4MHz / 3MHz / 5MHz / 10MHz)

Antenna port conducted and radiated test items were performed according to KDB 971168 D02 Power Meas. License Digital Systems v02r02 with maximum output power. Radiated measurements were performed with rotating EUT in different three orthogonal test planes to find the maximum emission.

Test Items	Band	Bandwidth (MHz)						Modulation		RB #			Test Channel		
		1.4	3	5	10	15	20	QPSK	16QAM	1	Half	Full	L	M	H
Max. Output Power	2	v	v	v	v	v	v	v	v	v	v	v	v	v	v
	4	v	v	v	v	v	v	v	v	v	v	v	v	v	v
	12	v	v	v	v	-	-	v	v	v	v	v	v	v	v
Peak-to-Average Ratio	2	v	v	v	v	v	v	v	v	v	v	v	v	v	v
	4	v	v	v	v	v	v	v	v	v	v	v	v	v	v
	12	v	v	v	v	-	-	v	v	v	v	v	v	v	v
26dB and 99% Bandwidth	2	v	v	v	v	v	v	v	v	v	v	v	v	v	v
	4	v	v	v	v	v	v	v	v	v	v	v	v	v	v
	12	v	v	v	v	-	-	v	v	v	v	v	v	v	v

Test Items	Band	Bandwidth (MHz)						Modulation		RB #			Test Channel		
		1.4	3	5	10	15	20	QPSK	16QAM	1	Half	Full	L	M	H
Conducted Band Edge	2	v	v	v	v	v	v	v	v	v	-	v	v	-	v
	4	v	v	v	v	v	v	v	v	v	-	v	v	-	v
	12	v	v	v	v	-	-	v	v	v	-	v	v	-	v

Conducted Spurious Emission	2	v	v	v	v	v	v	v	v	v	-	-	v	v	v
	4	v	v	v	v	v	v	v	v	v	-	-	v	v	v
	12	v	v	v	v	-	-	v	v	v	-	-	v	v	v
Frequency Stability	2	v	-	-	-	-	-	v	v	v	-	-	v	v	v
	4	v	-	-	-	-	-	v	v	v	-	-	v	v	v
	12	v	-	-	-	-	-	v	v	v	-	-	v	v	v
E.R.P./ E.I.R.P.	2	v	v	v	v	v	v	v	v	v	v	v	v	v	v
	4	v	v	v	v	v	v	v	v	v	v	v	v	v	v
	12	v	v	v	v	-	-	v	v	v	v	v	v	v	v
Radiated Spurious Emission	2	v	-	-	-	-	-	v	v	v	-	-	v	v	v
	4	v	-	-	-	-	-	v	v	v	-	-	v	v	v
	12	v	-	-	-	-	-	v	v	v	-	-	v	v	v
Note	1. The mark "v" means that this configuration is chosen for testing 2. The mark "-" means that this bandwidth is not supported.														

4.3. Description of Support Units

The EUT has been tested as an independent unit together with other necessary accessories or support units. The following support units or accessories were used to form a representative test configuration during the tests.

Equipment	Model No.	Serial No.	FCC ID	Trade Name
/	/	/	/	/

Note:

1. All the equipment/cables were placed in the worst-case configuration to maximize the emission during the test.

2. Grounding was established in accordance with the manufacturer's requirements and conditions for the intended use.

4.4. Configuration of Tested System

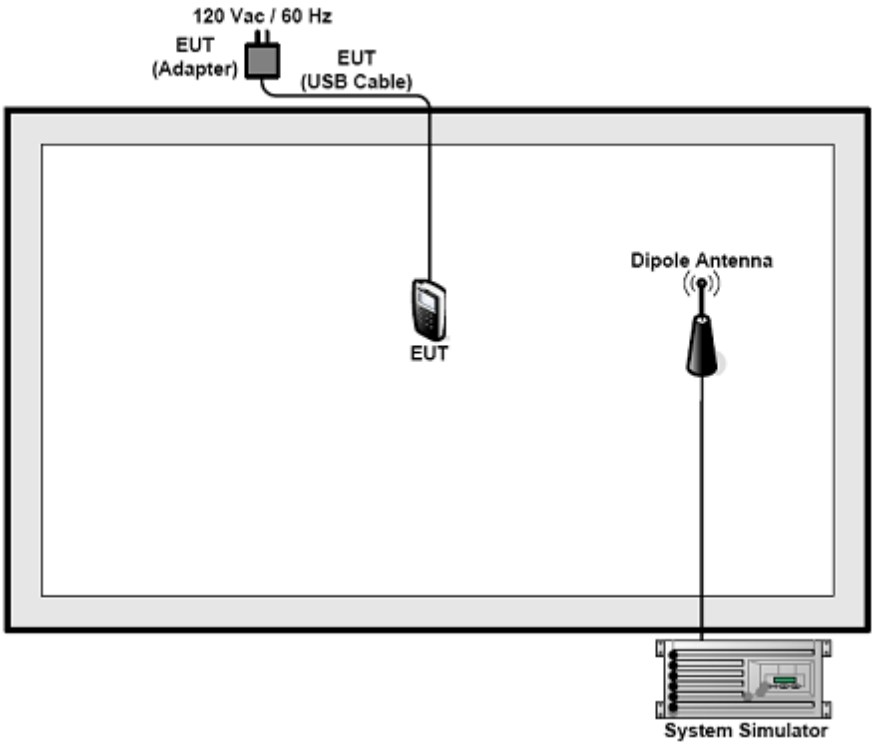

4.5. Measurement Results Explanation Example

For all conducted test items:

The offset level is set in the spectrum analyzer to compensate the RF cable loss and attenuator factor between RF conducted output port and spectrum analyzer. With the offset compensation, the spectrum analyzer reading level will be exactly the RF output level. The spectrum analyzer offset is derived from RF cable loss and attenuator factor.

Offset = RF cable loss + attenuator factor.

5. Facilities and Accreditations

5.1. Facilities

The test facility is recognized, certified, or accredited by the following organizations:

- FCC - Registration No.: 645098
  Shenzhen Tongce Testing Lab.
  The 3m Semi-anechoic chamber has been registered and fully described in a report with the (FCC) Federal Communications Commission. The acceptance letter from the FCC is maintained in our files.
- IC - Registration No.: 10668A-1
  The 3m Semi-anechoic chamber of Shenzhen TCT Testing Technology Co., Ltd. has been registered by Certification and Engineering Bureau of Industry Canada for radio equipment testing

5.2. Location

Shenzhen Tongce Testing Lab
Address: 1B/F., Building 1, Yibaolai Industrial Park, Qiaotou, Fuyong, Baoan District, Shenzhen, Guangdong, China
TEL: +86-755-27673339

5.3. Measurement Uncertainty

The reported uncertainty of measurement y ± U, where expended uncertainty U is based on a standard uncertainty multiplied by a coverage factor of k=2, providing a level of confidence of approximately 95 %.

No.	Item	MU
1	Conducted Emission	±2.56dB
2	RF power, conducted	±0.12dB
3	Spurious emissions, conducted	±0.11dB
4	All emissions, radiated(<1G)	±3.92dB
5	All emissions, radiated(>1G)	±4.28dB
6	Temperature	±0.1°C
7	Humidity	±1.0%

6. Test Results and Measurement Data

6.1. Conducted Output Power Measurement

6.1.1. Test Specification

Test Requirement:	FCC part 2.1046; 22.913; 24.232(c); 27.50(d); 27.50(c); 27.50(b)
Test Method:	FCC part 2.1046
Limits:	LTE Band 2: 2W LTE Band 4: 1W
Test Setup:	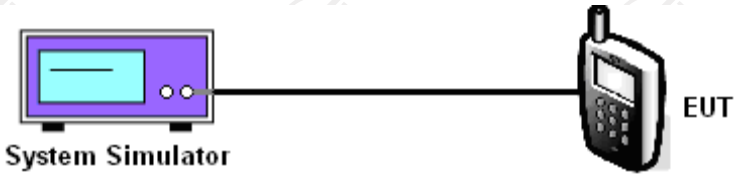
Test Procedure:	1. The transmitter output port was connected to the system simulator. 2. Set EUT at maximum power through system simulator. 3. Select lowest, middle, highest channels for each band and different modulation. 4. Measure and record the power level from the system simulator.
Test Result:	PASS

6.1.2. Test Instruments

Equipment	Manufacturer	Model	Serial Number	Calibration Due
Wideband Radio Communication Tester	R&S	CMW500	114220	Sep. 27, 2018

Note: *The calibration interval of the above test instruments is 12 months and the calibrations are traceable to international system unit (SI).*

6.2. Peak to Average Ratio

6.2.1. Test Specification

Test Requirement:	FCC part 2.1046; 22.913; 24.232(c); 27.50(d); 27.50(c); 27.50(b)
Test Method:	FCC KDB 971168 v02r02
Limit:	The peak-to-average ratio (PAR) of the transmission may not exceed 13 dB.
Test Setup:	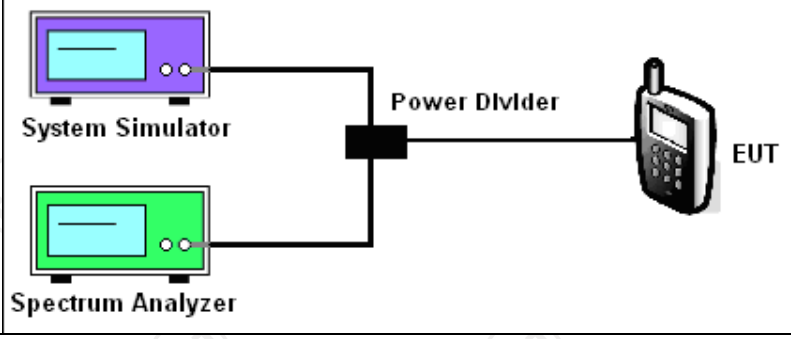
Test Procedure:	1. The testing follows FCC KDB 971168 v02r02 Section 5.7.1. 2. The EUT was connected to spectrum analyzer and system simulator via a power divider. 3. Set EUT to transmit at maximum output power. 4. Set the CCDF (Complementary Cumulative Distribution Function) option of the spectrum analyzer. Record the maximum PAPR level associated with a probability of 0.1%.
Test Result:	PASS

6.2.2. Test Instruments

Equipment	Manufacturer	Model	Serial Number	Calibration Due
Wideband Radio Communication Tester	R&S	CMW500	114220	Sep. 27, 2018
Spectrum Analyzer	Agilent	N9020A	MY49100060	Sep. 27, 2018

Note: *The calibration interval of the above test instruments is 12 months and the calibrations are traceable to international system unit (SI).*

6.3. 99% Occupied Bandwidth and 26dB Bandwidth Measurement

6.3.1. Test Specification

Test Requirement:	FCC part 2.1049; 24.238(b); 27.53
Test Method:	FCC part 2.1049
Limit:	N/A
Test Setup:	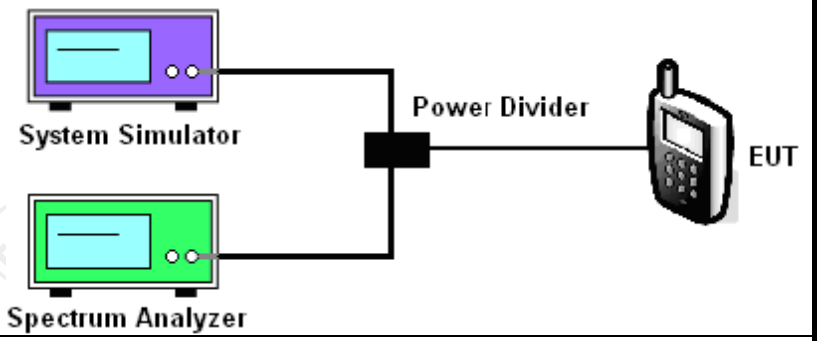
Test Procedure:	1. The testing follows FCC KDB 971168 v02r02 Section 4.2. 2. The EUT was connected to the spectrum analyzer and system simulator via a power divider. 3. The RF output of the EUT was connected to the spectrum analyzer by RF cable and attenuator. The path loss was compensated to the results for each measurement. 4. The 99% occupied bandwidth were measured, set RBW= 1% of OBW, VBW= 3*RBW, sample detector, trace maximum hold. 5. The 26dB bandwidth were measured, set RBW= 1% of EBW, VBW= 3*RBW, peak detector, trace maximum hold.
Test Result:	PASS

6.3.2. Test Instruments

Equipment	Manufacturer	Model	Serial Number	Calibration Due
Wideband Radio Communication Tester	R&S	CMW500	114220	Sep. 27, 2018
Spectrum Analyzer	Agilent	N9020A	MY49100060	Sep. 27, 2018

Note: *The calibration interval of the above test instruments is 12 months and the calibrations are traceable to international system unit (SI).*

6.4. Band Edge and Conducted Spurious Emission Measurement

6.4.1. Test Specification

Test Requirement:	FCC part 2.1051; 22.917(a); 27.53(h); 27.53(c); 27.53(g); 24.238(a)
Test Method:	FCC part2.1051
Limit:	-13dBm
Test Setup:	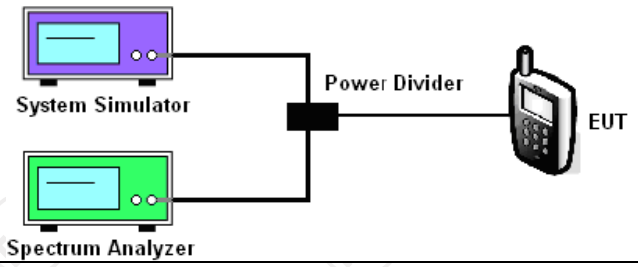
Test Procedure:	1. The testing follows FCC KDB 971168 v02r02 Section 6.0. 2. The EUT was connected to the spectrum analyzer and system simulator via a power divider. 3. The RF output of EUT was connected to the spectrum analyzer by an RF cable and attenuator. The path loss was compensated to the results for each measurement. 4. The band edges of low and high channels for the highest RF powers were measured. 5. The conducted spurious emission for the whole frequency range was taken. 6. The RF fundamental frequency should be excluded against the limit line in the operating frequency band. 7. The limit line is derived from 43 + 10log(P) dB below the transmitter power P(Watts) = P(W) - [43 + 10log(P)] (dB) = [30 + 10log(P)] (dBm) - [43 + 10log(P)] (dB) = -13dBm. For Band 17, he limit line is derived from 55 + 10log(P) dB below the transmitter power
Test Result:	PASS

6.4.2. Test Instruments

Equipment	Manufacturer	Model	Serial Number	Calibration Due
Wideband Radio Communication Tester	R&S	CMW500	114220	Sep. 27, 2018
Spectrum Analyzer	Agilent	N9020A	MY49100060	Sep. 27, 2018

Note: *The calibration interval of the above test instruments is 12 months and the calibrations are traceable to international system unit (SI).*

6.5. Field Strength of Spurious Radiation Measurement

6.5.1. Test Specification

Test Requirement:	FCC part 2.1053; 22.917(a); 27.53(g) ; 27.53(c); 27.53(h); 24.238(a)
Test Method:	FCC part 2.1053
Limit:	30MHz~20GHz -13dBm
Test setup:	For 30MHz~1GHz 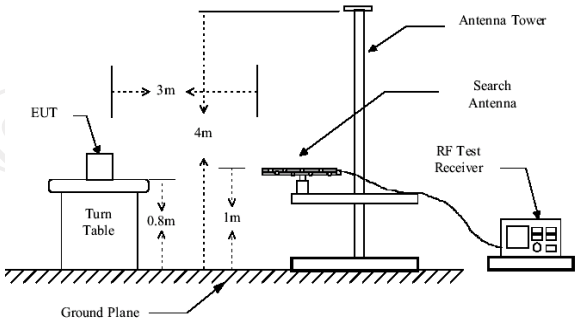 1GHz ~20GHz 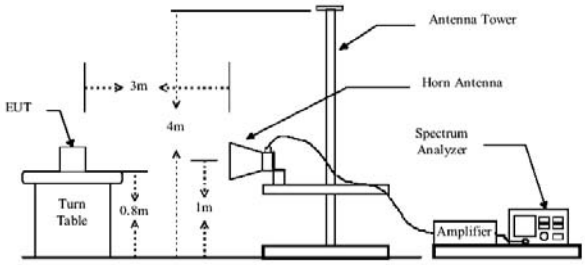
Test Procedure:	1. The testing follows FCC KDB 971168 v02r02 Section 5.8 and ANSI / TIA-603-D-2010Section 2.2.12. 2. The EUT was placed on a rotatable wooden table 0.8 meters above the ground. 3. The EUT was set 3 meters from the receiving antenna, which was mounted on the antenna tower. 4. The table was rotated 360 degrees to determine the position of the highest spurious emission. 5. The height of the receiving antenna is varied between one meter and four meters to search for the maximum spurious emission for both horizontal and vertical polarizations. 6. Make the measurement with the spectrum analyzer's RBW = 1MHz, VBW = 3MHz, taking record of maximum spurious emission. 7. A horn antenna was substituted in place of the EUT and was driven by a signal generator. 8. Tune the output power of signal generator to the

	same emission level with EUT maximum spurious emission. 9. Taking the record of output power at antenna port. 10. Repeat step 7 to step 8 for another polarization. 11. EIRP (dBm) = S.G. Power – Tx Cable Loss + Tx Antenna Gain 12. ERP (dBm) = EIRP - 2.15 13. The RF fundamental frequency should be excluded against the limit line in the operating frequency band. 14. The limit line is derived from 43 + 10log(P) dB below the transmitter power P(Watts) = P(W) - [43 + 10log(P)] (dB) = [30 + 10log(P)] (dBm) - [43 + 10log(P)] (dB) = -13dBm. For Band 17, he limit line is derived from 55 + 10log(P) dB below the transmitter power
Test results:	PASS

6.5.2. Test Instruments

Radiated Emission Test Site (966)				
Name of Equipment	**Manufacturer**	**Model**	**Serial Number**	**Calibration Due**
ESPI Test Receiver	ROHDE&SCHWARZ	ESVD	100008	Sep. 27, 2018
Spectrum Analyzer	ROHDE&SCHWARZ	FSEM	848597/001	Sep. 27, 2018
Pre-Amplifier	HP	8447D	2727A05017	Sep. 27, 2018
Pre-Amplifier	EM Electronics Corporation CO.,LTD	EM30265	07032613	Sep. 27, 2018
Broadband Antenna	Schwarzbeck	VULB9163	351	Sep. 27, 2018
Broadband Antenna	Schwarzbeck	VULB9163	340	Sep. 27, 2018
Horn Antenna	Schwarzbeck	BBHA 9120D	631	Sep. 27, 2018
Horn Antenna	Schwarzbeck	BBHA 9120D	629	Sep. 27, 2018
Coax cable	TCT	N/A	N/A	Sep. 27, 2018
Coax cable	TCT	N/A	N/A	Sep. 27, 2018
EMI Test Software	Shurple Technology	EZ-EMC	N/A	N/A
Signal Generator	Maconi	2022D	N/A	Sep. 27, 2018
Wideband Radio Communication Tester	R&S	CMW500	114220	Sep. 27, 2018

Note: *The calibration interval of the above test instruments is 12 months and the calibrations are traceable to international system unit (SI).*

6.6. Frequency Stability Measurement

6.6.1. Test Specification

Test Requirement:	FCC part 2.1055; 22.355; 27.54; 24.235
Test Method:	FCC Part 2.1055
Limit:	±2.5 ppm
Test Setup:	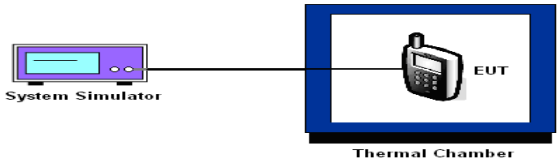
Test Procedure:	**Test Procedures for Temperature Variation** 1. The testing follows FCC KDB 971168 v02r02 Section 9.0. 2. The EUT was set up in the thermal chamber and connected with the system simulator. 3. With power OFF, the temperature was decreased to -30°C and the EUT was stabilized before testing. Power was applied and the maximum change in frequency was recorded within one minute. 4. With power OFF, the temperature was raised in 10°C steps up to 50°C. The EUT was stabilized at each step for at least half an hour. Power was applied and the maximum frequency change was recorded within one minute. **Test Procedures for Voltage Variation** 1. The testing follows FCC KDB 971168 v02r02 Section 9.0. 2. The EUT was placed in a temperature chamber at 25±5° C and connected with the system simulator. 3. The power supply voltage to the EUT was varied from BEP to 115% of the nominal value measured at the input to the EUT. 4. The variation in frequency was measured for the worst case.
Test Result:	PASS

6.6.2. Test Instruments

Equipment	Manufacturer	Model	Serial Number	Calibration Due
System simulator	R&S	CMU200	111382	Sep. 27, 2018
Spectrum Analyzer	Agilent	N9020A	MY49100060	Sep. 27, 2018
Thermal chamber	JQ	JQ-2000	N/A	Sep. 27, 2018

Note: *The calibration interval of the above test instruments is 12 months and the calibrations are traceable to international system unit (SI).*

Appendix A: Photographs of Test Setup

Refer to test report TCT180207E008

Appendix B: Photographs of EUT

Refer to test report TCT180207E008

Test Data for Band 2, Band 4 and Band 12

Refer to Appendix Band 2 Band 4 Band 12

********END OF REPORT********