FCC Dynamic Frequency Selection Test Report

for

Planet Computers Limited

COSMO

COSMO COMMUNICATOR VE

FCC ID: 2AO7Q-COSMOVE

Prepared for : Planet Computers Limited
Suite #9, 56 Sloane Square, London, SW1W 8AX, United Kingdom

Prepared By : Audix Technology (Shenzhen) Co., Ltd.
No. 6, Kefeng Road, Science & Technology Park,
Nanshan District , Shenzhen, Guangdong, China

Tel: (0755) 26639496

Report Number : ACS-F19159
Date of Test : Aug.28~Dec.03, 2019
Date of Report : Dec.04, 2019

TABLE OF CONTENTS

Description Page

TEST REPORT VERIFICATION....3
1.SUMMARY OF MEASUREMENTS AND RESULTS....4
2.GENERAL INFORMATION....5
2.1.Description of Equipment Under Test....5
2.2.Description of Device (EUT)....6
2.3.Support Equipment....8
2.4.Test Channel....8
2.5.Description of Test Facility....9
2.6.Measurement Uncertainty....9
3.TEST EQUIPMENT....10
4.WORKING MODES AND REQUIREMENT TEST ITEM....11
4.1.Applicability of DFS Requirements Prior To Use A Channel....11
4.2.Applicability of DFS Requirements During Normal Operation....11
5.DFS DETECTION THRESHOLOS AND RADAR TEST WAVEFORMS....12
5.1.Interference Threshold Value, Master or Client Incorporating In-Service Monitoring....12
5.2.Radar Test Waveform Minimum Step....12
5.3.Short Pulse Radar Test Waveforms....13
5.4.Long Pulse Radar Test Waveforms....14
5.5.Frequency Hopping Pulse Radar Test Waveforms....16
5.6.Conducted Calibration Setup....18
5.7.Radar Waveform Calibration Procedure....18
5.8.Calibration Deviation....18
5.9.Radar Waveform Calibration Result....19
6.TEST SETUP AND TEST RESULT....20
6.1.Test Setup....20
6.2.Channel Move Time, Channel Closing Time, Non-Occupancy Period Measurement....22
7.PHOTOGRAPHS OF MEASUREMENT....27
7.1.Photographs of Slave Mode....27
8.PHOTOS OF THE EUT....28

TEST REPORT VERIFICATION

Applicant : Planet Computers Limited
Manufacturer : Planet Computers Limited
Product : COSMO
(A) Model No. : COSMO COMMUNICATOR VE
(B) Test Voltage : AC 120V/60Hz

Measurement Standards Used:

FCC RULES AND REGULATIONS PART 15 Subpart E
(FCC CFR 47 Part 15E, §15.407)

The device described above was tested by Audix Technology (Shenzhen) Co., Ltd. to determine the maximum emission levels emanating from the device. The maximum emission levels were compared to the FCC Part 15 subpart E limits.

The measurement results are contained in this test report and Audix Technology (Shenzhen) Co., Ltd. is assumed full responsibility for the accuracy and completeness of these measurements. Also, this report shows that the EUT to be technically compliant with the requirements of FCC Part 15E standards.

This report applies to above tested sample only. This report shall not be reproduced in part without written approval of Audix Technology (Shenzhen) Co., Ltd.

Date of Test : Aug.28~Dec.03, 2019 Report of date: Dec.04, 2019

Prepared by : Monica Liu / Assistant Reviewed by : Sunny Lu / Deputy Manager

AUDIX® 信華科技（深圳）有限公司
Audix Technology (Shenzhen) Co., Ltd.
EMC 部門報告專用章
Stamp only for EMC Dept. Report

Approved & Authorized Signer : Signature: David Jin
David Jin / Manager

1. SUMMARY OF MEASUREMENTS AND RESULTS

The EUT has been tested according to the applicable standards as referenced below.

Description of Test Item	Results
Channel Availability Check Time	N/A
Channel Move Time	PASS
Non-Occupancy Period	PASS
Channel Closing Transmission Time	PASS
U-NII Detection Bandwidth	N/A
N/A is an abbreviation for Not Applicable, since the product is client without radar detection function	

2. GENERAL INFORMATION

2.1. Description of Equipment Under Test

Applicant	Planet Computers Limited Suite #9, 56 Sloane Square, London, SW1W 8AX, United Kingdom
Manufacturer	Planet Computers Limited Suite #9, 56 Sloane Square, London, SW1W 8AX, United Kingdom
Factory	Shenzhen Eastaeon Technology Limited Company 4F, B block, Kingdee Software Park, 2 Keji South 12 Road, Nanshan District, Shenzhen
Product	COSMO
Model No.	COSMO COMMUNICATOR VE
FCC ID	2AO7Q-COSMOVE
Power Adapter	Manufacturer: SHENZHEN TIANYIN ELECTRONICS CO., LTD. Model: TPA-10120125UU-MTK Input: 100-240V~, 50/60Hz, 0.6A Output: 5V, 2A / 7V, 1.67A / 9V, 1.67A / 12V, 1.25A
Rechargeable Li-ion Battery	Manufacturer: Shenzhen 3sun Electronics Co., Ltd.; M/N: Gemini Standard Battery; Rating Voltage: 3.85V; Capacity: 4220mAh; Charge Voltage: 4.4V.
USB Cable	Shielded, Detachable, 0.8m
Sample Type	Prototype production
Date of Receipt	Jul.12, 2019
Date of Test	Aug.28~Dec.03, 2019

2.2. Description of Device (EUT)

Product Feature & Specification		
Product	COSMO	
Model No.	COSMO COMMUNICATOR VE	
Radio	IEEE802.11 a/b/g/n/ac; Bluetooth V3.0+EDR; Bluetooth V4.0; NFC	
Power Source	☒ Commercial Power	AC 100 ~ 240V, 0.6A
	☒ External Power Source	DC 5/7/9/12V, 2/1.67/1.67/1.25A
	☒ Lithium battery	DC 3.85V, 4220mAh
	☐ UM battery	DC V
NFC		
Frequency Range	13.56MHz	
Type of Modulation	ASK	
Bluetooth		
Bluetooth Version	V4.0 dual mode	
Frequency Range	2402-2480MHz	
Type of Modulation	GFSK, π/4DQPSK, 8DPSK	
Data Rate	1Mbps, 2Mbps, 3Mbps	
Quantity of Channels	79/40	
Channel Separation	1MHz/2MHz	
2.4GHz Wi-Fi		
Support Modes	802.11b/g/n20/n40	
Frequency Range	2412-2462MHz	
Type of Modulation	802.11b(DSSS): CCK, QPSK, BPSK; 802.11g/n(OFDM): 64QAM,16QAM, QPSK, BPSK	
Data Rate	802.11b: 11/5.5/2/1 Mbps; 802.11g: 54/48/36/24/18/12/9/6 Mbps; 802.11n: up to 150Mbps	
Channel Separation	5MHz	
5GHz Wi-Fi		
Support Modes	802.11a/n20/n40/ac20/ac40/ac80	
Frequency Range	5180-5240MHz, 5260-5320MHz, 5500-5700MHz, 5745-5825MHz	
Type of Modulation	802.11a/ac/n (OFDM): QPSK, BPSK, 16QAM, 64QAM,256QAM	
Data Rate	802.11a: 54/48/36/24/18/12/9/6 Mbps; 802.11n up to 150 Mbps; 802.11ac: up to 400Mbps	
Channel Separation	5MHz	
Type of Product	Slave device without Radar detection	
Transmit Power Control	No Support	

Antenna System

NFC	
Type of Antenna	FPC Antenna
Antenna number	1
Antenna Peak Gain	0dBi
Bluetooth	
Type of Antenna	MONOPOLE Antenna
Antenna number	1
Antenna Peak Gain	-0.1dBi
Wi-Fi	
Type of Antenna	MONOPOLE Antenna
Antenna number	1
Antenna Peak Gain	DTS Band (2400-2483.5MHz) Peak Gain: -0.1dBi U-NII-1 Band(5150-5250MHz) Peak Gain: 0.6dBi U-NII-2A Band(5250-5350MHz) Peak Gain: 0.6dBi U-NII-2C Band(5470-5725MHz) Peak Gain: 0.4dBi U-NII-3 Band (5725-5850MHz) Peak Gain: 0.3dBi

2.3. Support Equipment

Item	Manufacturer	Model	Remark
AP Server	CISCO	AIR-AP1262N-A-K9	FCC ID: LDK102073 IC:2461B-102073
AP Server	D-Link	DIR-815A1	NCC ID: CCAI10LP092AT0 FCC ID: KA2IR815A1 IC: 4216A-IR815A1

2.4. Test Channel

Frequency Band	Channel No.	Frequency
5260-5320MHz (U-NII-2A Band)	**20MHz**	
	52	5260MHz
	80MHz	
	58	5290MHz
5500-5700MHz (U-NII-2C Band)	**20MHz**	
	100	5500MHz
	80MHz	
	106	5530MHz

2.5. Description of Test Facility

Site Description

Name of Firm : Audix Technology (Shenzhen) Co., Ltd.
No. 6, Kefeng Road, Science & Technology Park, Nanshan District, Shenzhen, Guangdong, China

EMC Lab. : Certificated by Industry Canada
Registration Number: IC 5183A-1
Valid Date: May.07, 2020

: Certificated by DAkkS, Germany
Registration No: D-PL-12151-01-00
Valid Date: Dec.07, 2021

: Accredited by NVLAP, USA
NVLAP Code: 200372-0
Valid Date: Mar.31, 2020

2.6. Measurement Uncertainty

Test Item	Uncertainty
DFS Time Measurement	±3.2%
Threshold	±0.50dBm

3. TEST EQUIPMENT

Item	Equipment	Manufacturer	Model No.	Serial No.	Last Cal.	Cal. Interval	Calibration unit
1.	Vector Signal Generation	Rohode&Schwarz	SMU200A	105064	Oct.14,18	1 Year	CCIC
2.	Signal Analyzer	Rohode&Schwarz	FSV7	102493	Oct.14,18	1 Year	CCIC
3.	Attenuator	Marvelous Microwave	MVE2213-30	No.2	Oct.14,18	1 Year	CCIC
4.	Attenuator	MCL	VAT-20W2-2W	1527-01	Oct.14,18	1 Year	CCIC
5.	Attenuator	MCL	VAT-20W2-2W	1527-03	Oct.14,18	1 Year	CCIC
6.	Attenuator	MCL	VAT-20W2-2W	1527-02	Oct.14,18	1 Year	CCIC
7.	Power Splitter	Marvelous Microwave	MVE8576	No.1	Oct.14,18	1 Year	CCIC
8.	Power Splitter	Marvelous Microwave	MVE8576	No.2	Oct.14,18	1 Year	CCIC
9.	Test Software	Rohode&Schwarz	DFS Analysis Tool	1EF59_1E	N/A	N/A	N/A

Notes: NCR means no calibration required(calibrated with system).
N/A means Not applicable.

4. WORKING MODES AND REQUIREMENT TEST ITEM

4.1. Applicability of DFS Requirements Prior To Use A Channel

Requirement	Operational Mode		
	Master	Client without radar detection	Client with radar detection
Non-Occupancy Period	✓	✓	✓
DFS Detection Threshold	✓	Not required	✓
Channel Availability Check Time	✓	Not required	Not required
U-NII Detection Bandwidth	✓	Not required	✓

4.2. Applicability of DFS Requirements During Normal Operation

Requirement	Operational Mode		
	Master	Client without radar detection	Client with radar detection
DFS Detection Threshold	✓	Not required	✓
Channel Closing Transmission Time	✓	✓	✓
Channel Move Time	✓	✓	✓
U-NII Detection Bandwidth	✓	Not required	✓

5. DFS DETECTION THRESHOLOS AND RADAR TEST WAVEFORMS

5.1. Interference Threshold Value, Master or Client Incorporating In-Service Monitoring

Maximum Transmit Power	Value (See Notes 1 and 2)
E.I.R.P. ≥ 200 milliwatt	-64dBm
E.I.R.P < 200 milliwatt Power spectral sensity < 10dBm/MHz	-62dBm
E.I.R.P. < 200 milliwatt that do not meet the power spectral sensity requirement	-64dBm
Note 1: This is the level at the input of the receiver assuming a 0 dBi receive antenna. Note 2: Throughout these test procedures an additional 1 dB has been added to the amplitude of the test transmission waveforms to account for variations in measurement equipment. This will ensure that the test signal is at or above the detection threshold level to trigger a DFS response.	

The radar Detection Threshold, lowest antenna gain is the parameter of interference radar DFS detection threshold.

5.2. Radar Test Waveform Minimum Step

Step intervals of 0.1 microsecond for Pulse Width, 1 microsecond for PRI, 1MHz for chirp width and 1 for the number of pulses will be utilized for the random determination of specific test waveforms.

5.3. Short Pulse Radar Test Waveforms

Radar Type	Pulse Width (µsec)	PRI (µsec)	Number of Pulse	Minimum Percentage of Successful Detection	Minimum number of Trials
0	1	1428	18	See Note 1	See Note 1
1	1	Test A: 15 unique PRI values randomly selected from the list 23 PRI values in Table 5a	$\text{Roundup}\left\{\left(\frac{1}{360}\right)\cdot\left(\frac{19\cdot 10^6}{PRI_{\mu sec}}\right)\right\}$	60%	30
		Test B: 15 unique PRI values randomly selected within the range of 518-3066 µsec, with a minimum incement of 1 µsec, excluding PRI values selected in Test A			
2	1-5	150-230	23-29	60%	30
3	6-10	200-500	16-18	60%	30
4	11-20	200-500	12-16	60%	30
Aggregate (Radar Types 1-4)				80%	120
Note 1: Short Pulse Radar Type 0 should be used for the detection bandwidth test, channel move time, and channel closing time tests.					

A minimum of 30 unique waveforms are required for each of the short pulse radar type 2 through 4. If more than 30 waveforms are used for short pulse radar types 2 through 4, then each additional waveform must also be unique and not repeated from the previous waveforms. If more than 30 waveforms are used for short pulse radar types 1, then each additional waveform generated with Test B and must also be unique and not repeated from the previous waveforms in Tests A or B.

FCC Radar Types (1~4) System Diagram

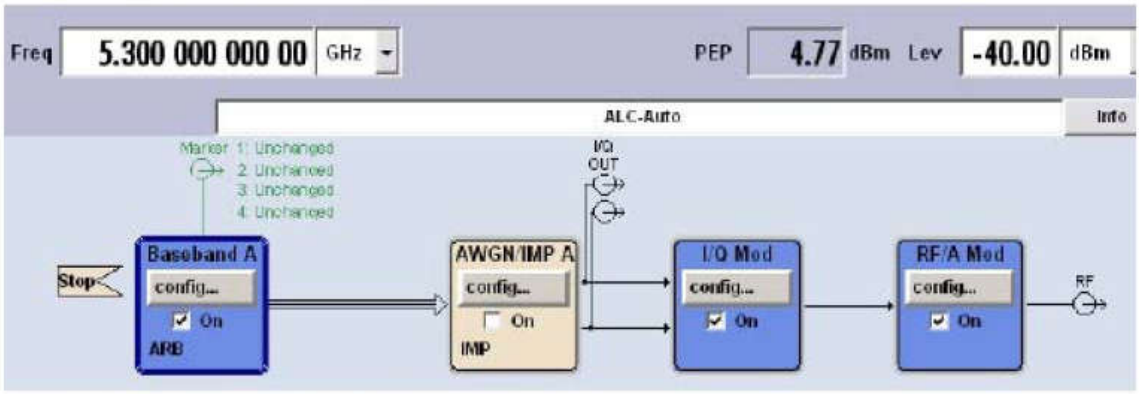

Used R&S SMU200A (Vector SG with two ARB)
B11: Base-band Generator with ARB (16M samples) and Digital Modulation
B13: Base-band Main Module
B106: frequency range (100 kHz to 6 GHz)
For selecting the waveform parameters from within the bounds of the signal type, system was random selection using uniform distribution.

5.4. Long Pulse Radar Test Waveforms

Radar Type	Pulse Width (µsec)	Chirp Width (MHz)	PRI (µsec)	Number of Pulse Per Burst	Number of Bursts	Minimum Percentage of Successful Detection	Minimum of Trials
5	50-100	5-20	1000-2000	1-3	8-20	80%	30

The parameters for this waveform are randomly chosen. Thirty unique waveforms are required for the Long Pulse radar test signal. If more 30 waveforms are used for the Long Pulse radar test signal, then each additional waveform must also be unique and not repeated from the previous waveforms. Each waveform is defined as following:

(1) The transmission period for the Long Pulse Radar test signal is 12 seconds.

(2) There are a total of 8 to 20 Bursts in the 12 second period, with the number of Bursts being randomly chosen. This number is Burst_Count.

(3) Each Burst consists of 1 to 3 pulses, with the number of pulses being randomly chosen. Each Burst within the 12 second sequence may have a different number of pulses.

(4) The pulse width is between 50 and 100 microseconds, with the pulse width being randomly chosen. Each pulse within a Burst will have the some pulse width. Pulses in different Bursts may have different pulse widths.

(5) Each pulse has a linear FM chirp between 5 and 20MHz, with the chirp width being randomly chosen. Each pulse within a Burst will have the same chirp width. Pulses in different Burst may have different chirp widths. The chirp is centered on the pulse. For example, with a radar frequency of 5300MHz and a 20MHz chirped signal, the chirp starts at 5290MHz and ends at 5310MHz.

(6) If more than one pulse is present in a Burst, the time between the pulses will be between 1000 and 2000 microseconds, with the time being randomly chosen. If three pulses are present in a Burst, the time between the first and second pulses is chosen independently of the time between the second and third pulses.

(7) The 12 second transmission period is divided into even intervals. The number of intervals is equal to Burst_Count. Each interval is of length (12000000/Burst_Count) microseconds. Each interval contains one Burst. The start time for the Burst, relative to the beginning of the interval, is between 1 and [(12000000/Burst_Count)-(Total Burst length)+(One Random PRI interval)] microseconds, with the start time being randomly chosen. The step interval for the start time is 1 microsecond. The start time for each Burst is chosen independently.

A representative example of a Long Pulse radar test waveform:

(1) The total test signal length is 12 seconds.

(2) 8 Bursts are randomly generated for the Burst_Count.

(3) Burst 1 has 2 randomly generated pulses.

(4) The pulse width (for both pulses) is randomly selected to be 75 microseconds.

(5) The PRI is randomly selected to be at 1213 microseconds.

(6) Bursts 2 through 8 are generated using steps 3-5.

(7) Each Burst is contained in even intervals of 1500000 microseconds. The starting location for Pulse 1. Burst 1 is randomly generated (1 to 1500000 minus the total Burst 1 length + 1 random PRI interval) at the 325001 microsecond step. Bursts 2 through 8 randomly fall in successive 1500000 microsecond intervals (i.e. Burst 2 falls in the 1500001-3000000 microsecond range).

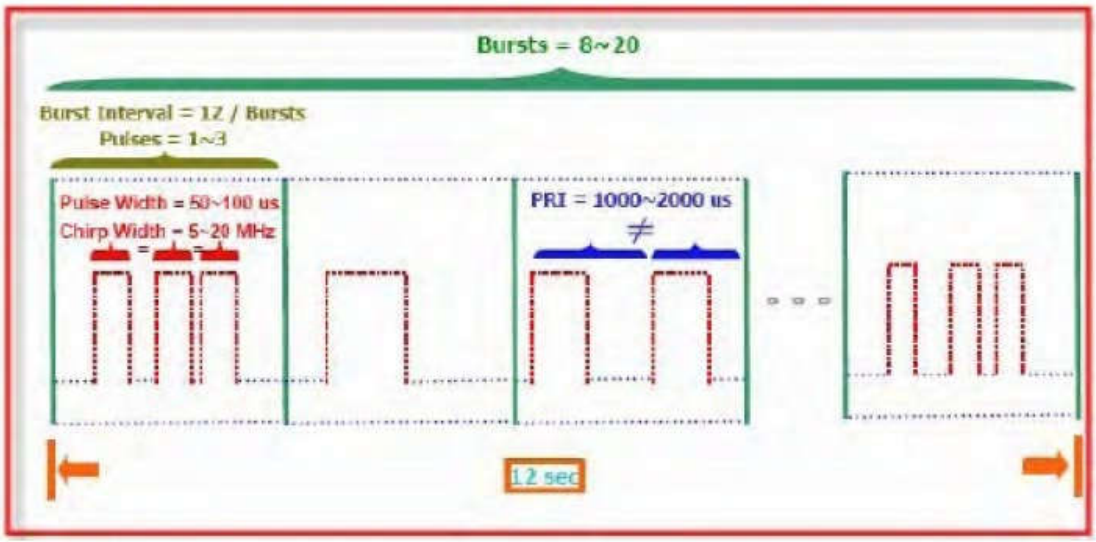

FCC Radar Types (5) System Diagram

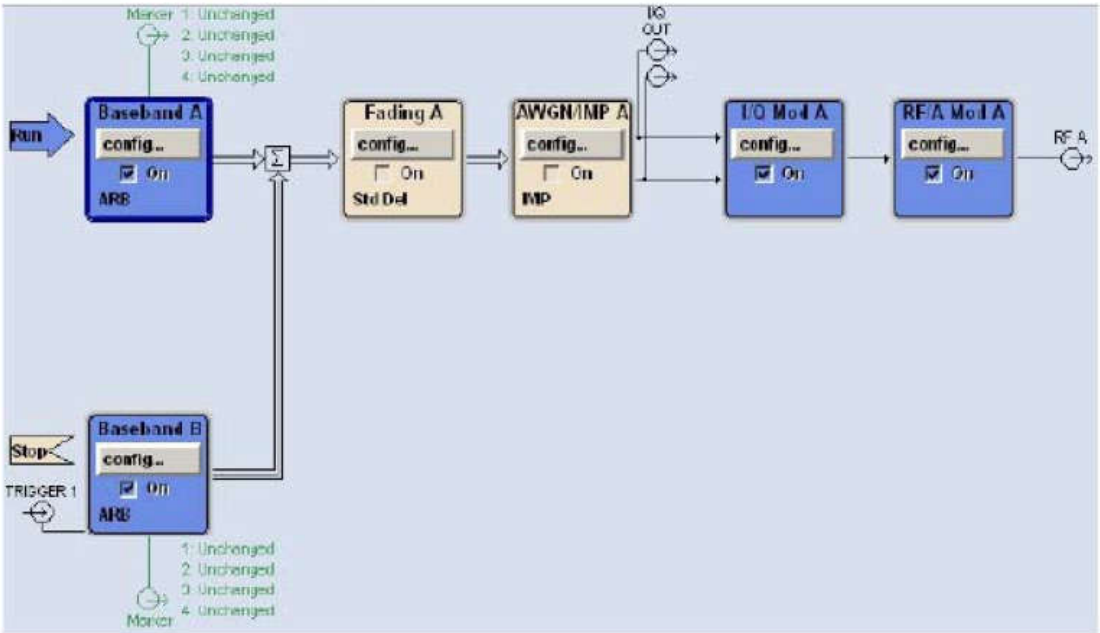

Used R&S SMU200A (Vector SG with two ARB)
Path A/Path B Two B11: Base-band Generator with ARB (16M samples) and Digital Modulation
B13: Base-band Main Module
B106: frequency range (100 kHz to 6 GHz)
For selecting the waveform parameters from within the bounds of the signal type, system was random selection using uniform distribution.

5.5. Frequency Hopping Pulse Radar Test Waveforms

Radar Type	Pulse Width (µsec)	PRI (µsec)	Pulses Per Hop	Hopping Rate (kHz)	Hopping Sequence Length (ms)	Minimum Percentage of Successful Detection	Minimum of Trials
6	1	333	9	0.333	300	70%	30

For the Frequency Hopping Radar Type, the same Burst parameters are used for each waveform. The hopping sequence is different for each waveform and a 100-length segment is selected from the hopping sequence defined by the following algorithm:

The first frequency in a hopping sequence is selected randomly from the group of 475 integer frequencies form 5250-5274MHz. Next, the frequency that was just chosen is removed from the group and a frequency is randomly selected from the remaining 474 frequencies in the group. This process continues until all 475 frequencies are chosen for the set. For selection of random frequency, the frequencies remaining within the group are always treated as equally likely.

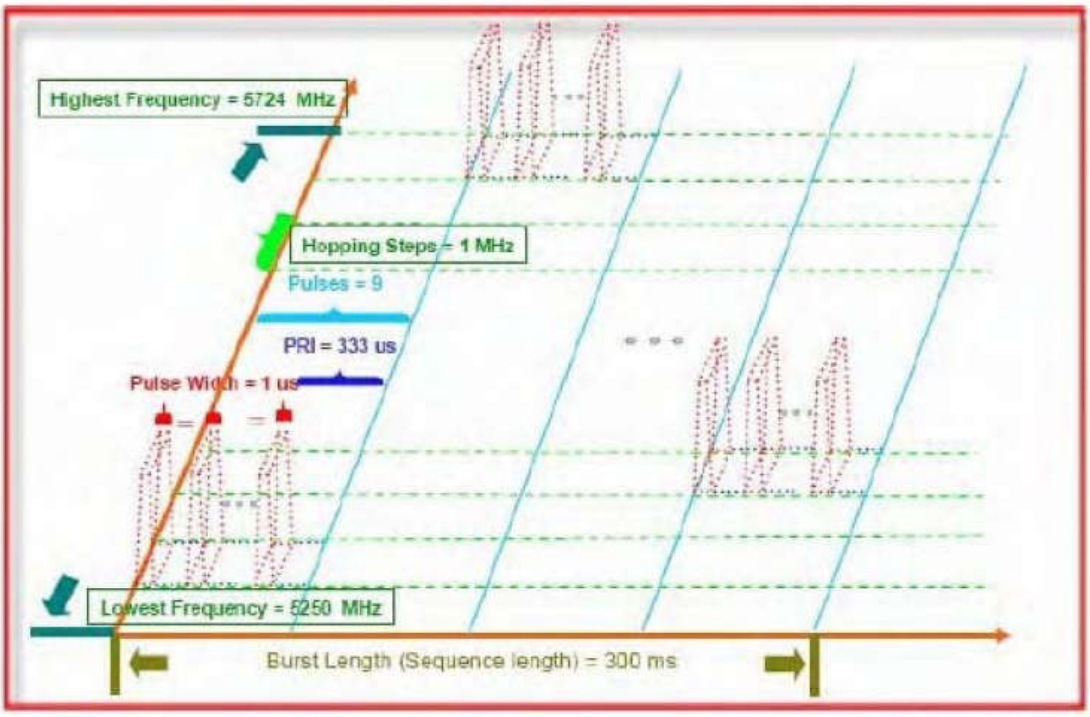

FCC Radar Types (6) System Diagram

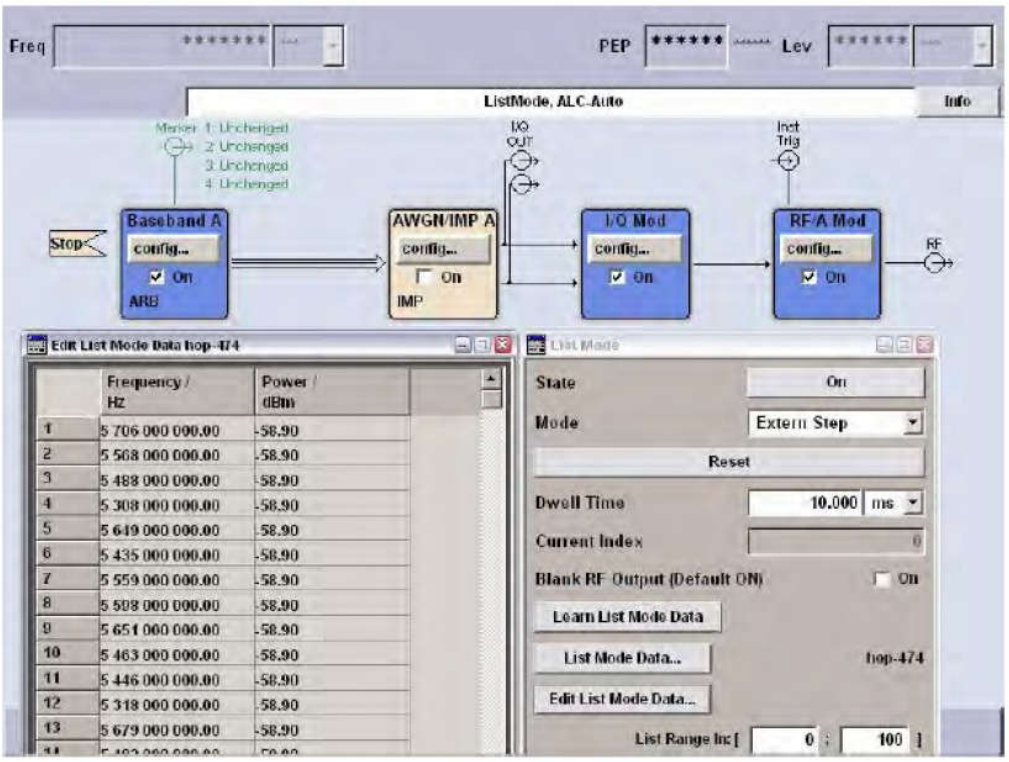

Used R&S SMU200A (Vector SG with two ARB)
B11: Base-band Generator with ARB (16M samples) and Digital Modulation
B13: Base-band Main Module
B106: frequency range (100 kHz to 6 GHz)
For selecting the waveform parameters from within the bounds of the signal type, system was random selection using uniform distribution.

5.6. Conducted Calibration Setup

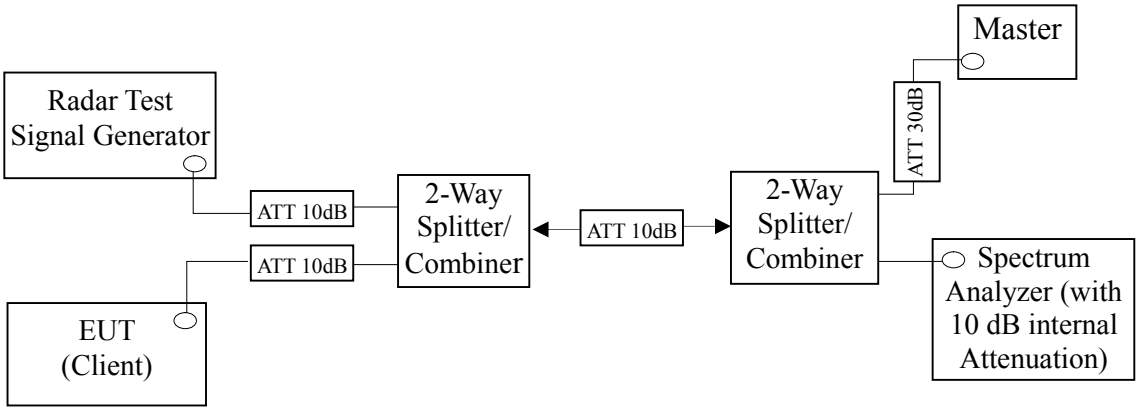

5.7. Radar Waveform Calibration Procedure

The measured frequency is 5260MHz &5290MHz for U-NII-2A Band, 5500MHz & 5530MHz for U-NII-2C Band. The radar signal was the same as transmitted channels, and injected into the antenna port of AP (master) or Client Device with Radar Detection, measured the channel closing transmission time and channel move time. The calibrated conducted detection threshold level is set to -62dBm. The tested level is lower than required level hence it provides margin to the limit.

5.8. Calibration Deviation

There is no deviation with the original standard.

5.9. Radar Waveform Calibration Result

DFS detection threshold level and the burst of pulses on the Channel frequency

U-NII-2A Band	U-NII-2C Band
20MHz	**20MHz**
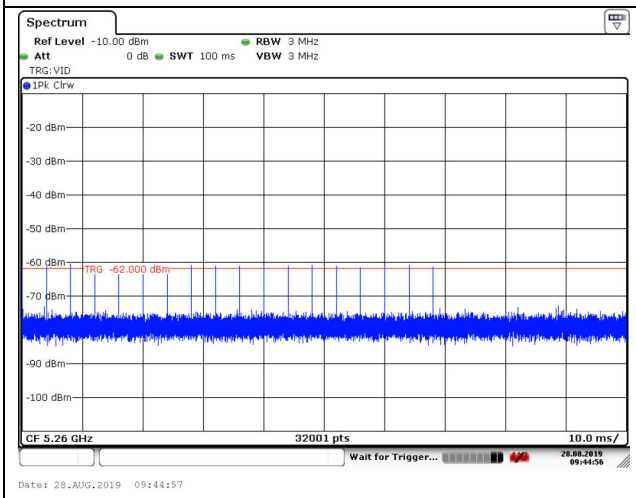	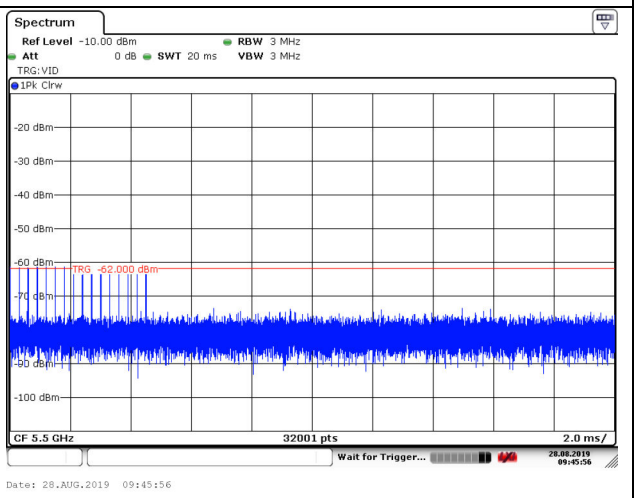
80MHz	**80MHz**
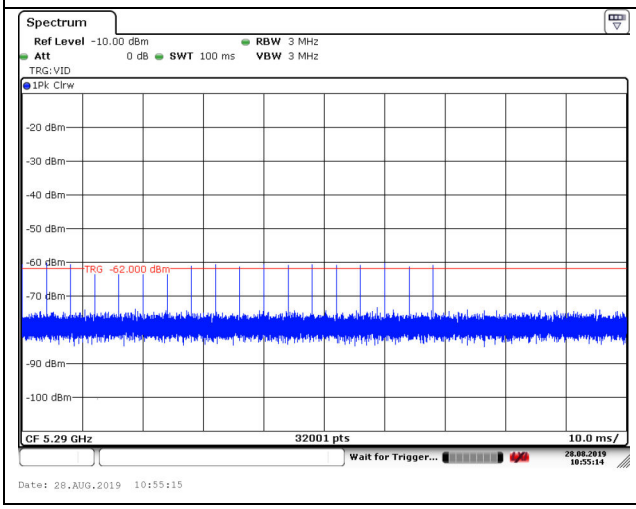	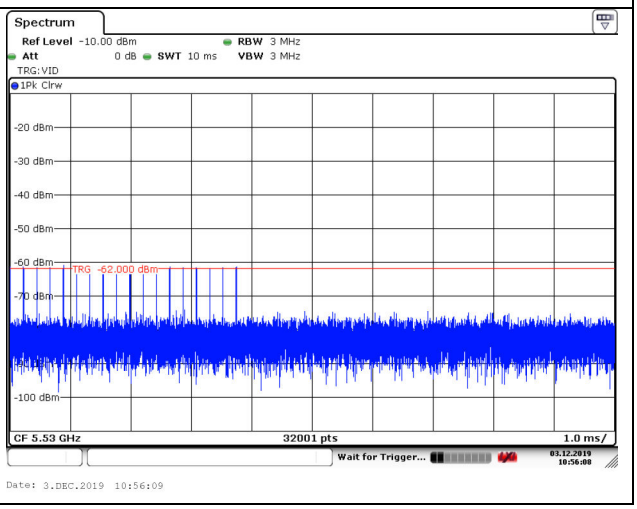

6. TEST SETUP AND TEST RESULT

6.1. Test Setup

6.1.1. Test Setup Diagram

Following is the test setup for generated the radar waveforms and used to monitor UNII device.

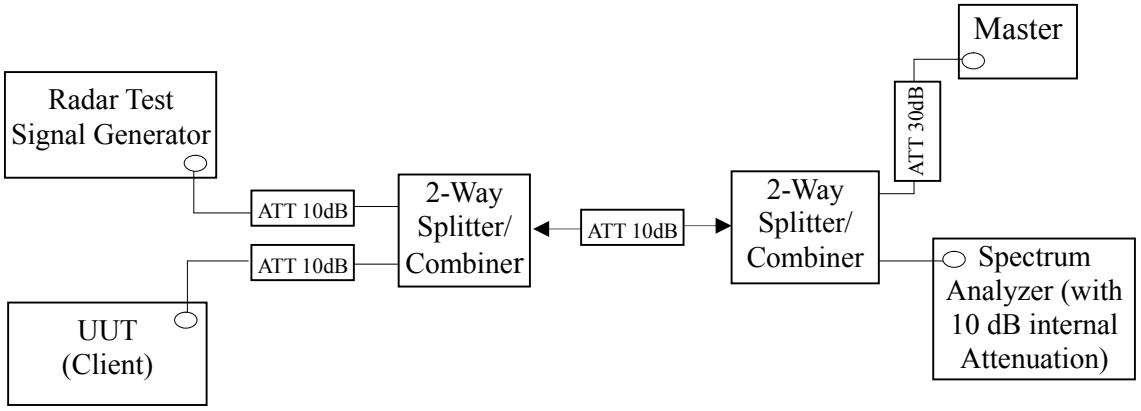

6.1.2. Test Setup Operation

System testing was performed with the designated test file that streams full motion video from the Access Point to Client in full motion video mode using the media player with the V2.61 Codec package. This file is used by IP and Frame based systems for loading the test channel during the in-service compliance testing of the U-NII device. The waveform parameters from within the bounds of the signal type are selected randomly using uniform distribution.
A spectrum analyzer is used as a monitor to verify that the EUT has vacated the Channel within the (Channel Closing Transmission Time and Channel Move Time, and does not transmit on a Channel during the Non-Occupancy Period after the detection and Channel move. It is also used to monitor EUT transmissions during the Channel Availability Check Time.

6.1.3. Test Setup for Data Traffic Plot

U-NII-2A Band	U-NII-2C Band
20MHz	**20MHz**
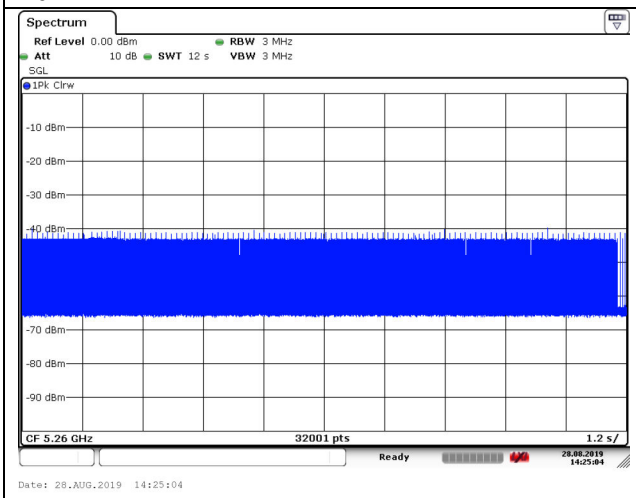	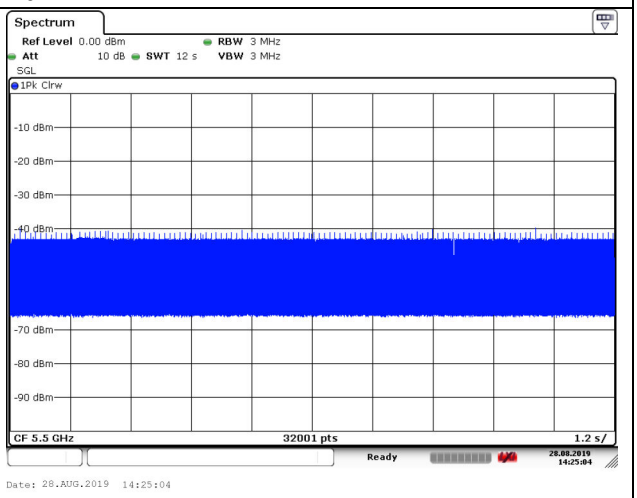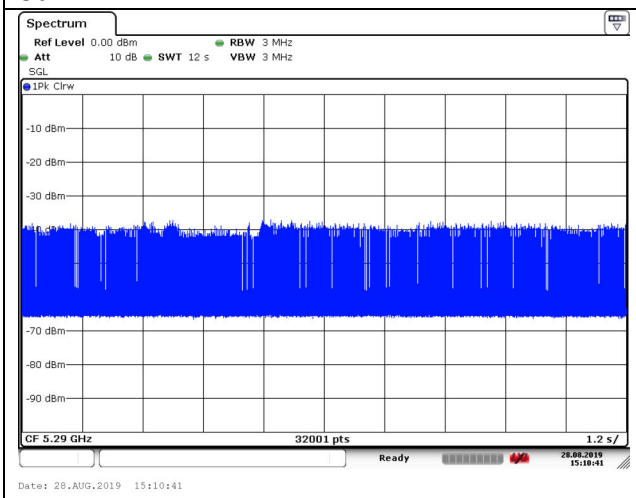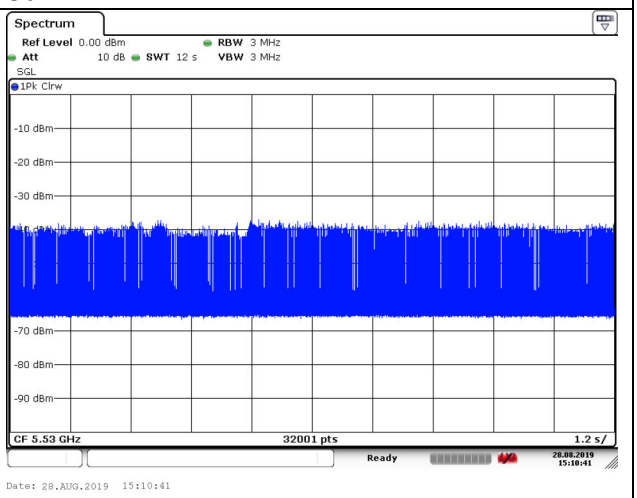
80MHz	**80MHz**