Company: Doven

Product Name: DV21DC Internal Photos

Report No.: JANU01 - UWB FCC

PHOTOS - INTERNAL

MiCOM Labs

opening wireless markets

1. Internal Photographs

1.1.1. Product – Internal

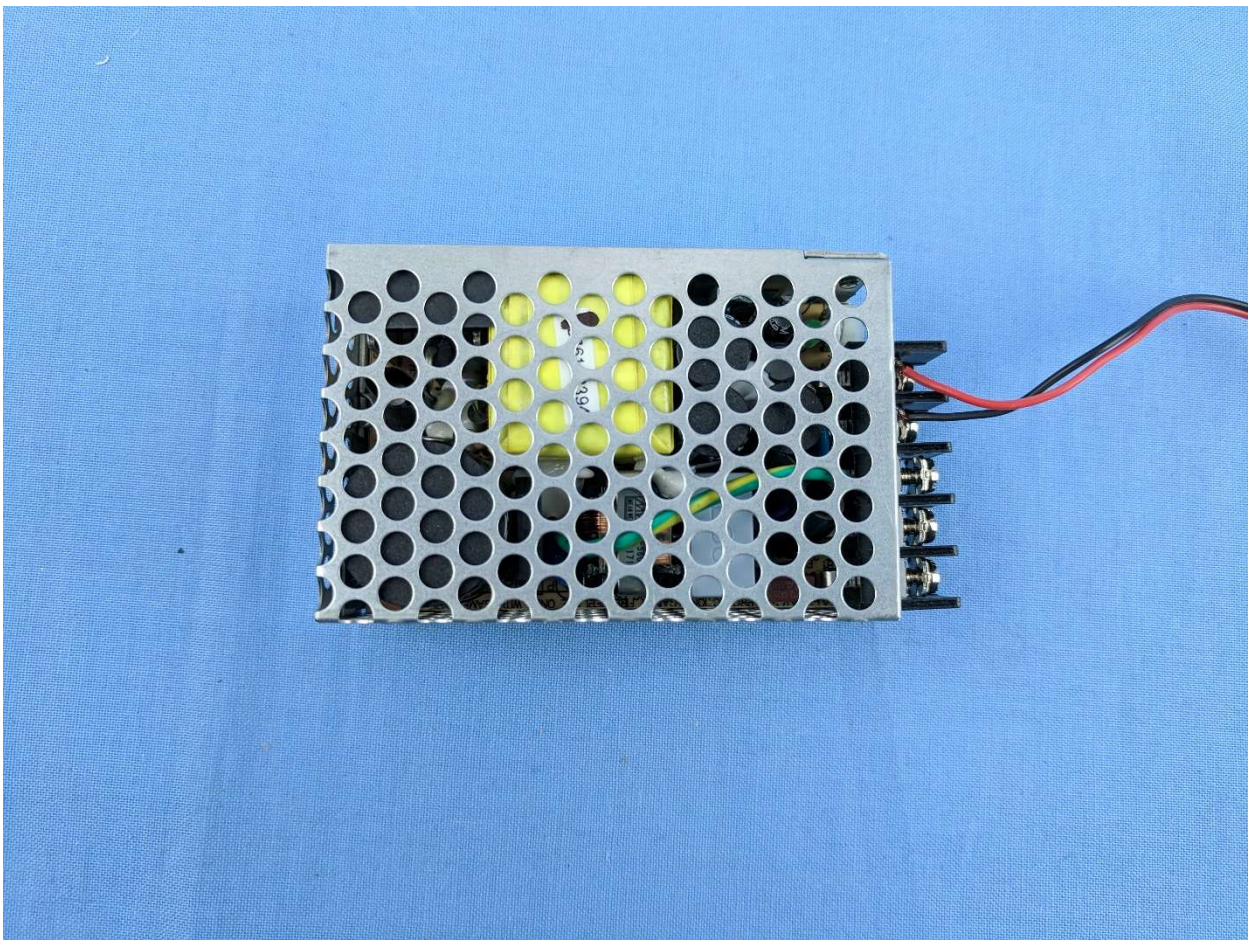

Power Supply Unit

This test report may be reproduced in full only. The document may only be updated by MiCOM Labs personnel. All changes will be noted in the Document History section of the report.

Power Supply Unit Label

This test report may be reproduced in full only. The document may only be updated by MiCOM Labs personnel. All changes will be noted in the Document History section of the report.

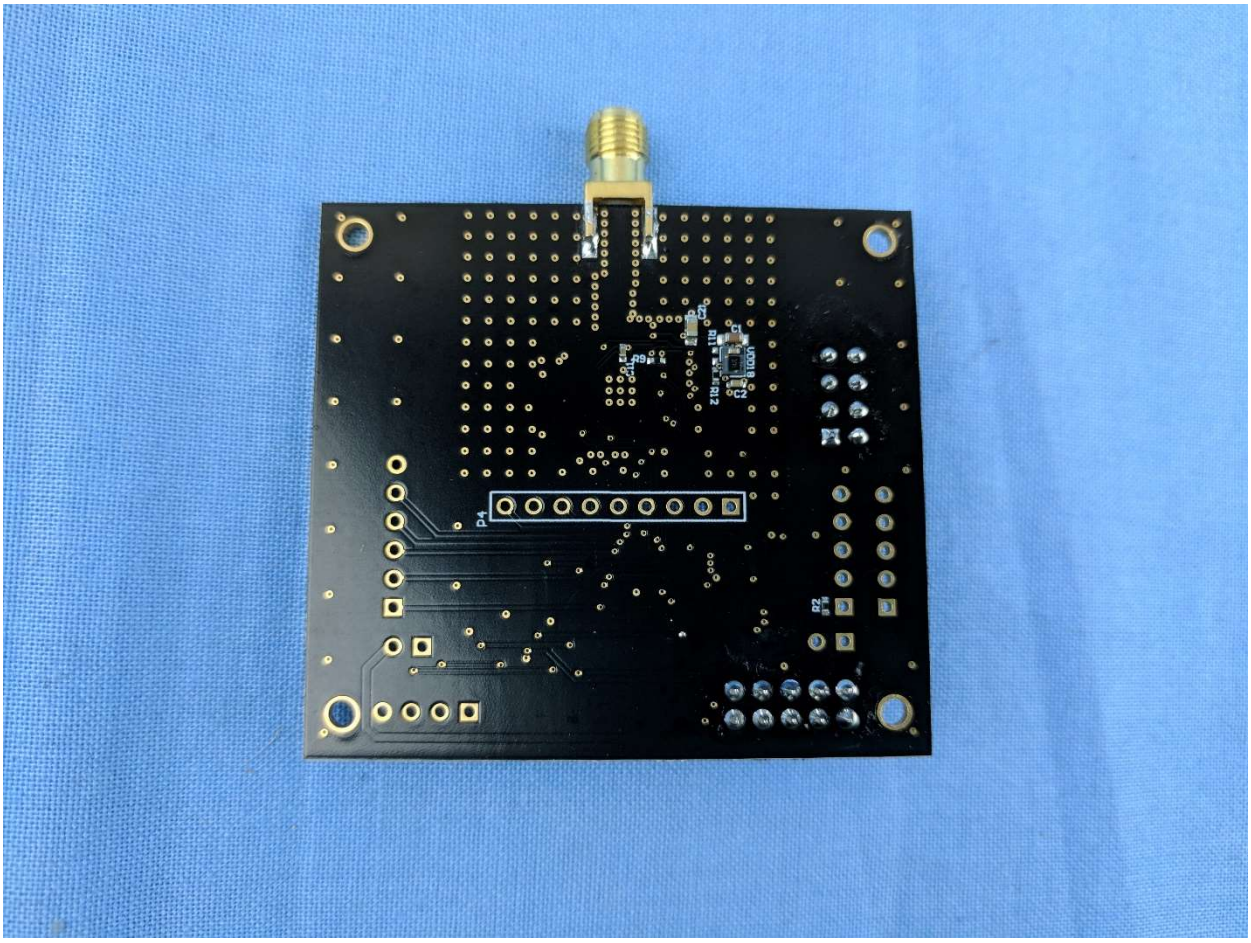

Module bottom

This test report may be reproduced in full only. The document may only be updated by MiCOM Labs personnel. All changes will be noted in the Document History section of the report.

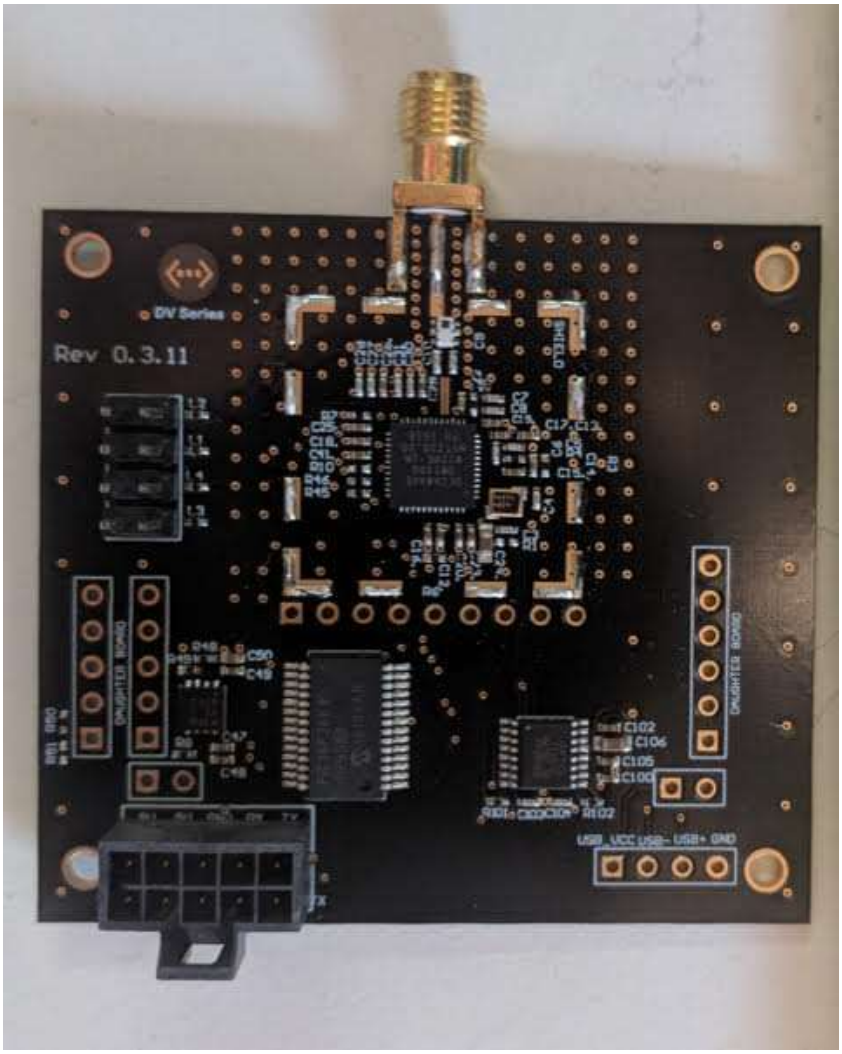

Module top – shield removed

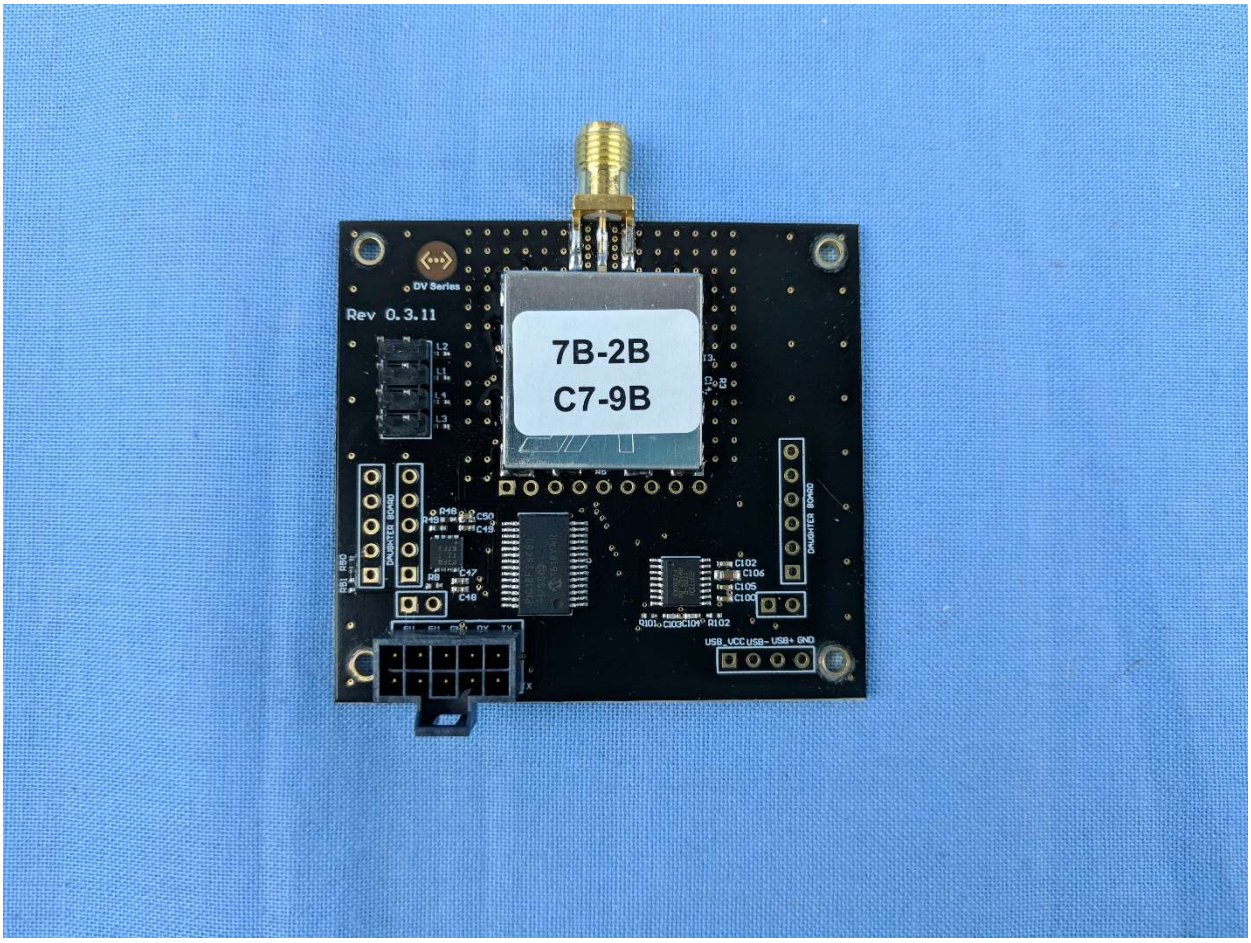
DV Series
Rev 0.3.11
7B-2B
C7-9B
DAUGHTER BOARD
USB_VCC USB- USB+ GND

Module Top

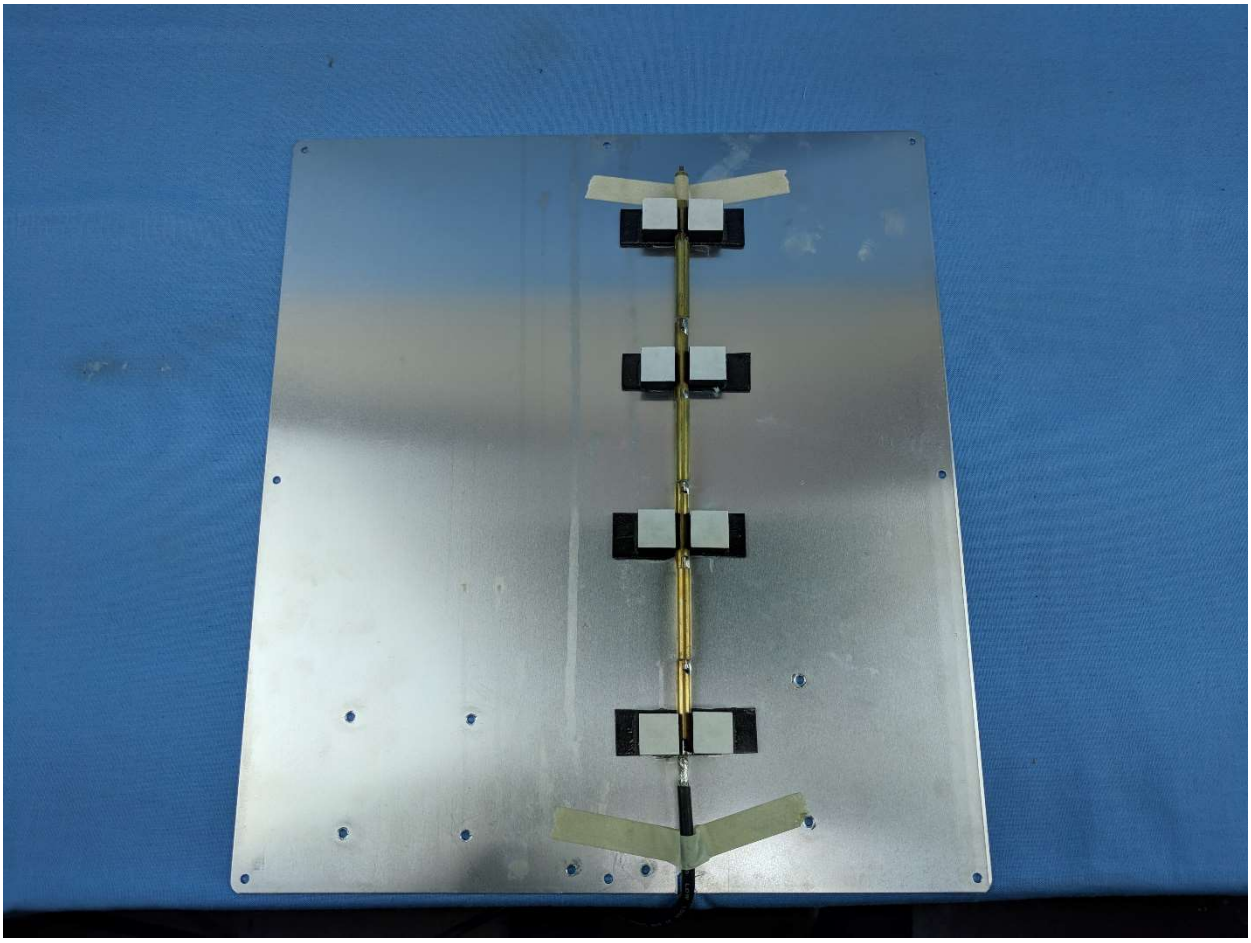

DV21DC Antenna

This test report may be reproduced in full only. The document may only be updated by MiCOM Labs personnel. All changes will be noted in the Document History section of the report.

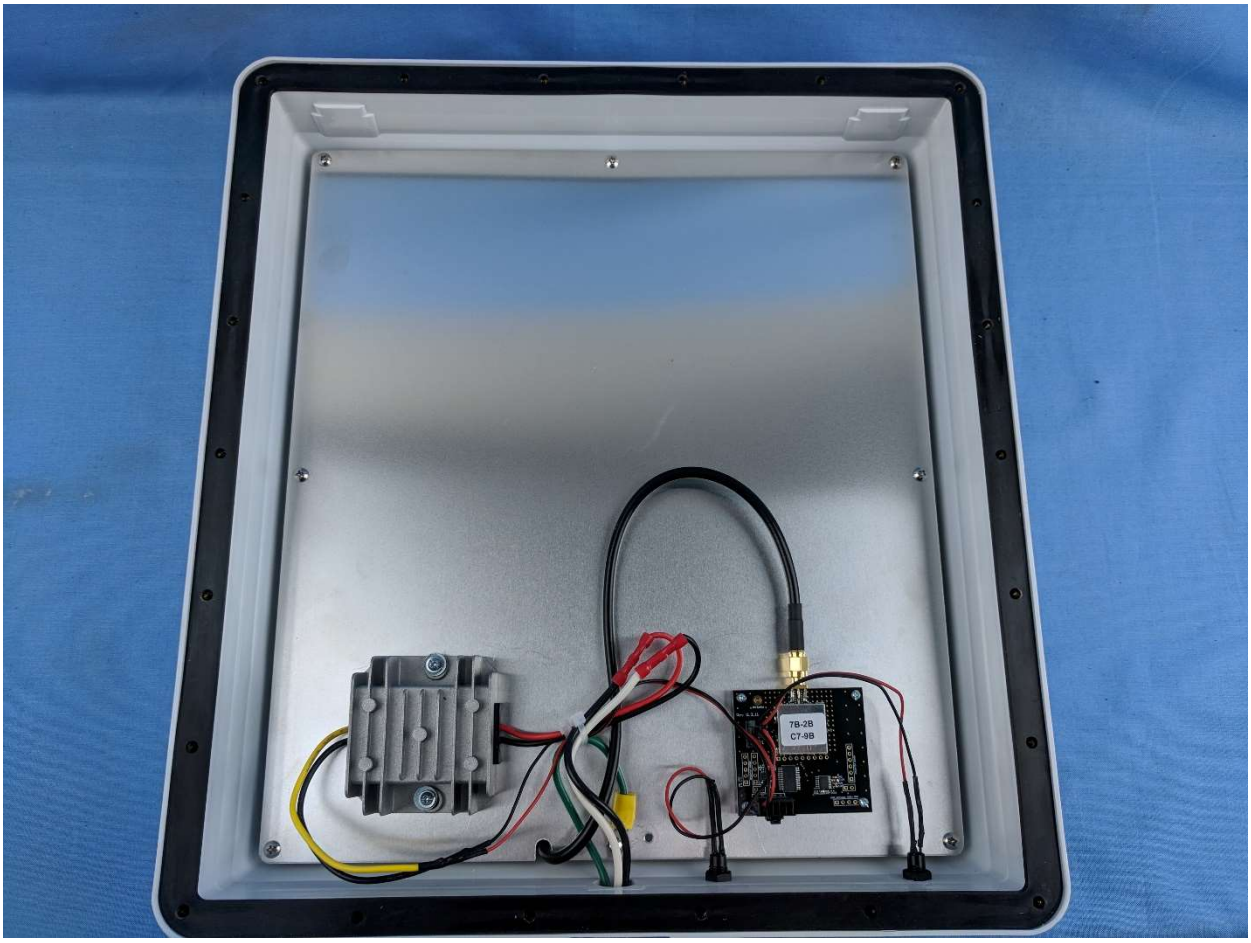

DV21DC Internal

This test report may be reproduced in full only. The document may only be updated by MiCOM Labs personnel. All changes will be noted in the Document History section of the report.

575 Boulder Court
Pleasanton, California 94566, USA
Tel: +1 (925) 462 0304
Fax: +1 (925) 462 0306
www.micomlabs.com