User Manual

NM0824-I mCPIe based LoRa Concentrator card

Author: Nikunj Mehta

Date: 12/04/2022

Version / Status: 1.0

Document Library Approver: Lalit Shah

Document Classification: Internal

Distribution and approvals are maintained in:
It is the responsibility of the user of this document to verify that it is the most current edition.

Preface

Privacy information

This document may contain information of a sensitive nature. This information should not be given to any persons outside of the System Level Solutions (I) Pvt. Ltd. without prior consent.

Revision history

Name	Description of Change	Date	Version
Nikunj Mehta	Initial Revision	12/04/2022	1.0

Approval

Name	Position	Signature	Date
Lalit Shah	Manager	Email approval received (must be stored in document library with Approved version)	

Copyright © 2021 System Level Solutions (I) Pvt Ltd.
All rights reserved

Table of Contents

1. Introduction.....5
1.1. Key Features.....6
1.2. Applications.....7
2. LoRa Modulation Technique.....7
3. Module Overview.....8
3.1. SX1302.....9
3.2 RF Front End Interface.....10
3.3 Detection Engine – Modems.....11
4. Application Information.....11
4.1. Geographical Designs.....11
4.2. Reference Block Diagram.....12
4.3. RF Interface.....12
4.4. External Module Connector.....12
4.4.1. SPI.....13
4.4.2. UART.....13
4.4.3. Digital IOs.....13
4.4.4. LEDs.....13
4.4.5. USB-Interface.....13
4.4.6. Others.....13
5. LoRa Systems, Network Approach.....14
5.1. Overview.....14
6. Firmware.....15
6.1. Cloning of Repository.....15
6.2. Compilation for Raspberry-PI Platform.....15
6.3. Compilation For Other Platforms.....16
6.4. Interface Availability.....16
6.5. STM Platform.....17
7. Electrical Characteristics & Timing specifications.....17
7.1. Absolute Maximum Ratings.....17

Copyright © 2021 System Level Solutions (I) Pvt Ltd.
All rights reserved

Version: 1.0
Document Classification: Internal

7.2. Global Electrical Characteristics....18
7.3. SPI Interface Characteristics....18
7.4. RF Characteristics....20
7.4.1. Transmitter RF Characteristics....20
7.4.2. Receiver RF Characteristics....21
8. Module Package....21
8.1. Pin out....21
8.2. Module Dimensions....24
9. Ordering Information....25
10. Restrictions and Limitations....25
10.1. Hardware Restrictions and Limitations....25
10.2. Software Restrictions and Limitations....25
10.3. Compliance Restrictions and Limitations....25
10.4. Disclaimer....26
11. Appendix....27
11.1. List of Abbreviations....27
11.2. References....27
12. FCC regulatory information....28
12.1. End Device Labeling....28
21.2. RF Exposure Compliance....28
21.3. Installation Notice....28
12.4. FCC Part 15B Compliance of End Device....28
12.5. FCC ID: 2AO93 - NM0824-I....29

Copyright © 2021 System Level Solutions (I) Pvt Ltd.
All rights reserved

1. Introduction

The Concentrator module is targeted for a huge variety of applications like Smart Metering, IoT and M2M applications. It is a multi-channel high performance transmitter/receiver module designed to receive several LoRa packets simultaneously using different spreading factors on multiple channels. The concentrator module can be integrated into a gateway as a complete RF front end Module. It provides the possibility to enable robust communication between a LoRa gateway and a huge amount of LoRa end-nodes spread over a wide range of distance. The concentrator needs a host system for proper operation. This host system can be a PC or MCU that will be connected to the concentrator via SPI / USB Interface.

Figure 1-1: Image of the Concentrator Board

The Concentrator is able to receive up to 8 LoRa® packets simultaneously sent with different spreading factors and also on different channels. This unique capability allows to implement innovative network architectures advantageous over other short range systems:

- End-point nodes (e.g; sensor nodes) can change frequency with each transmission in a random pattern. This provides vast improvement of the system robustness in terms of interfere immunity and radio channel diversity.

Copyright © 2021 System Level Solutions (I) Pvt Ltd.
All rights reserved

- End-point nodes can dynamically perform link rate adaptation based (by adapting their spreading factors) on their link margin without adding complexity to the protocol. There is no need to maintain a table of which end point uses which data rate, because all data is demodulated in parallel.
- The capacity of the air interface can be increased due to orthogonal spreading factors.
- Due to the high range a star topology can be used. This results in simple implementation avoiding complex network layers, wireless routers and additional network protocol traffic.

1.1. Key Features

- Compact size 30 mm x 51 mm , mPCIe 52 pins compliant form factor
- LoRa® modulation technology
- Frequency band 915 MHz Support
- Output power level upto +27 dBm
- Sensitivity down to -139 dBm @SF12 with SX1250 TX/RX front-end
- SPI and USB interface
- SX1302 base band processor
- High-speed 250 / 500 kHz LoRa demodulator
- Multi-SF 125 kHz LoRa® reception with Fine Timestamp
- 1 (G)FSK demodulator
- 2 x SX1250 and 1 x SX1261 Tx/Rx front-ends
- Supply voltage +3.3V and/or +5V
- RF interface optimized to 50 Ω
- Range above 11Km (Line of Sight)
- Range of several km in urban environment
- Status LEDs

Copyright © 2021 System Level Solutions (I) Pvt Ltd.
All rights reserved

1.2. Applications

- Smart Metering
- Wireless Star Networks
- Home, Building, Industrial automation
- Remote Control
- Wireless Sensors
- M2M, IoT
- Wireless Alarm and Security Systems
- LoRaWAN, etc.

2. LoRa Modulation Technique

The Concentrator uses Semtech's LoRa® spread spectrum modulation technique. This modulation, in contrast to conventional modulation techniques, permits an increase in link budget and increased immunity to in-band interference.

LoRa also provides significant advantages in both blocking and selectivity, solving the traditional design compromise between range, interference immunity and energy consumption, please refer to [1].

Semtech's LoRa® technology transceivers support several bandwidth options and spreading factors ranging from 7 to 12. The spread spectrum LoRa® modulation is performed by representing each bit of payload information by multiple chips of information. The rate at which the payload information is sent is referred to as the nominal symbol rate (Rs), the ratio between the nominal symbol rate and chip rate is the spreading factor and represents the number of modulation symbols sent per bit of information. Note that the spreading factor must be normally known in advance on both transmit and receive sides of the radio link as different spreading factors are orthogonal to each other. Note also the resulting signal to noise ratio (SNR) required at the receiver input. It is the capability to receive signals with negative SNR that increases the sensitivity, so link budget and range, of the LoRa receiver.

For further information on LoRa® please refer to [2].

Copyright © 2021 System Level Solutions (I) Pvt Ltd.
All rights reserved

3. Module Overview

An overview about designation of the key components is given by the following picture

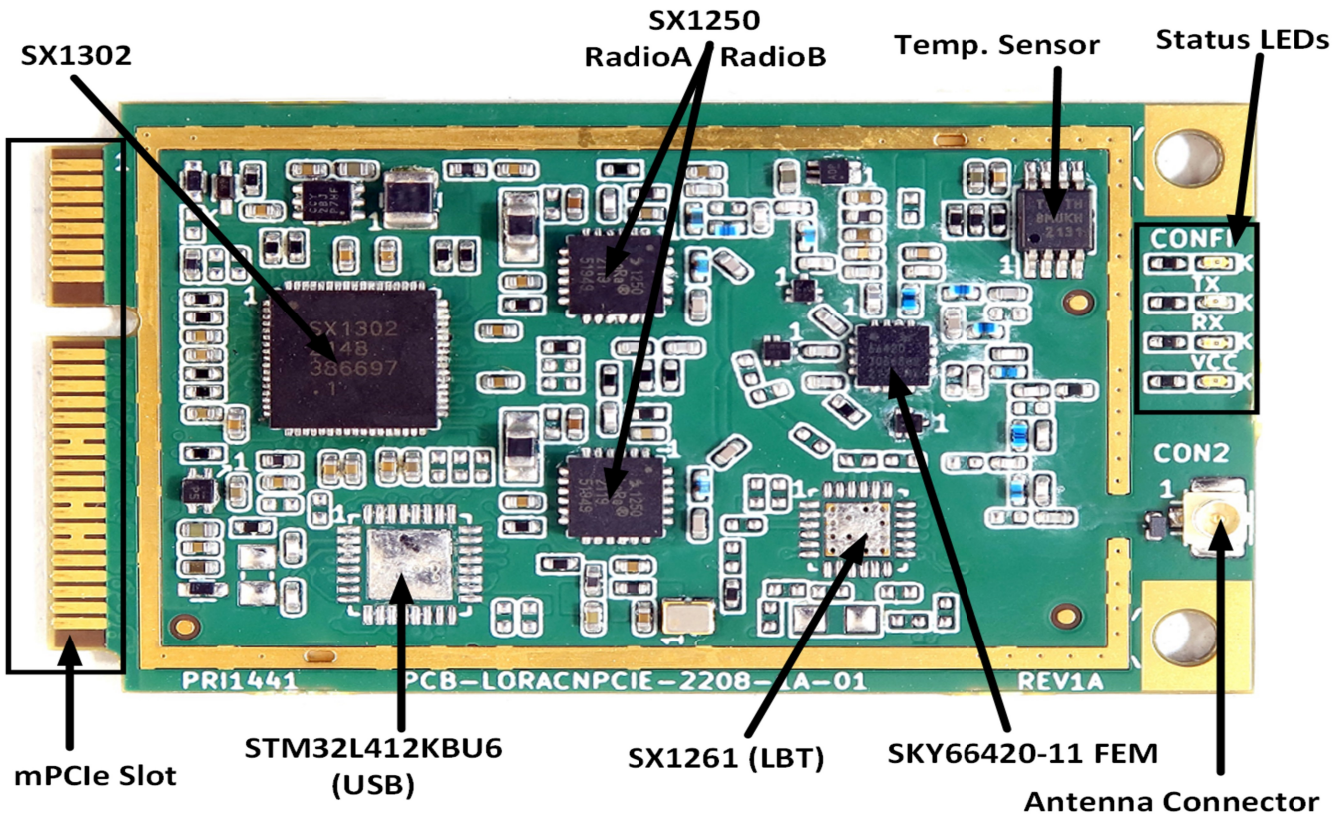

Figure 3-1: Component Overview of the Concentrator

NM0824-I Concentrator module is a new generation of LoRaWAN gateway module with mini-PCIe form-factor. Based on the Semtech® SX1302 baseband LoRaWAN® chip, NM0824-I unlocks the greater potential capacity of long-range wireless transmission for gateway products. It features higher sensitivity, less power consumption, and lower operating temperature. On boad I2C Base Temperature Sensing available .

NM0824-I LoRaWAN gateway module has SPI and USB versions on both US915 frequency bands, It is designed for M2M and IoT applications and can be widely applied in LPWAN gateway supported scenarios. It would be a perfect choice for you to significantly reduce the technical difficulties and time-consumption when developing the LoRa gateway devices, including LoRaWAN gateway, etc.

Copyright © 2021 System Level Solutions (I) Pvt Ltd.
All rights reserved

3.1. SX1302

The SX1302 is a new generation of baseband LoRa® chip for gateways. It excels in reducing current consumption, simplifies the thermal design of gateways, and reduces the Bill Of Materials costs, yet it is capable of handling a higher amount of traffic than preceding devices.

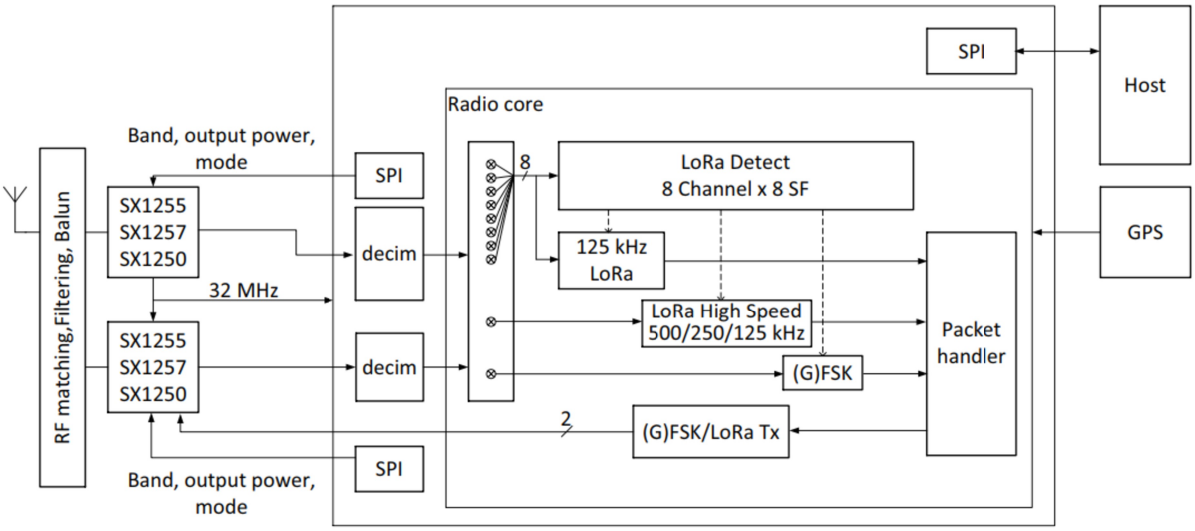

Figure 3-3-1-1: Block Diagram of the Concentrator with SX1302 Baseband Processor

The high-speed baseband digital engines are clocked from a single 32 MHz clock source, and the chip embeds the capability to support SF5 and SF6 unlike previous generations. The architecture has been reworked to reduce power consumption very significantly; it makes it easier to embed the SX1302 in highly-integrated environments where power dissipation might be a challenge.

The SX1302 is a digital baseband engine, capable of detecting and demodulating large amounts of LoRa® packets expected in the IOT networks. It is intended to be used with various RF Front End chips (RF to IQ), such as Semtech's SX1255/57/50. The SX1302 is supplied on two different domains, 1.2V for the core of the baseband processing, and 3 to 3.6V for the host and RF interface. The SX1302 can detect at any time, any packet in a combination of 8 different spreading factors (SF5 to SF12) and 10 channels. The control of the SX1302 by the host system (PC, MCU) is made using a Hardware Abstraction Layer (HAL).

Copyright © 2021 System Level Solutions (I) Pvt Ltd.
All rights reserved

3.2 RF Front End Interface

The SX1302 accommodates SX1250 RF front-end device which is one from Semtech products.

The role of these devices is to down-convert the RF signal to baseband (direct conversion or low-IF), and digitize it to feed the IQ samples to the SX1302 baseband chip.

The interconnection to the front-end device is organized as follows.

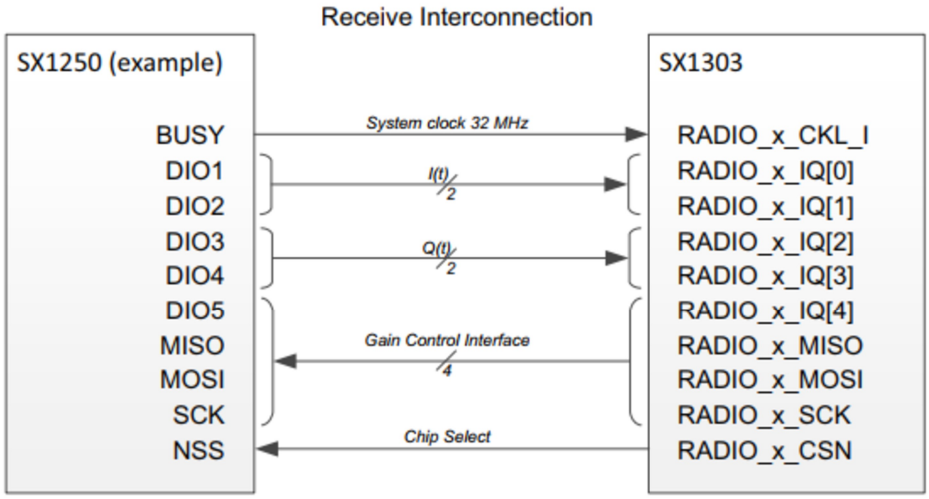

Figure 3-2-1: Receive Interconnection

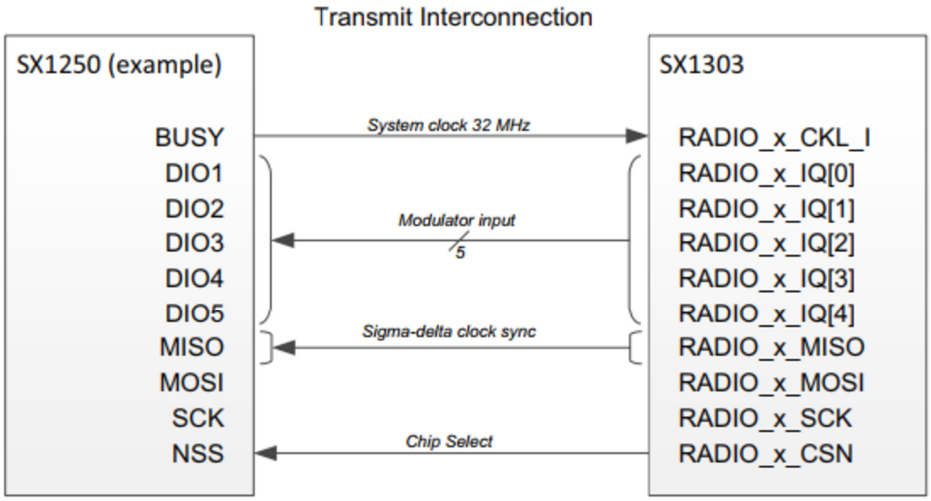

Figure 3-2-2: Transmit Interconnection

Copyright © 2021 System Level Solutions (I) Pvt Ltd.
All rights reserved

3.3 Detection Engine – Modems

The SX1302 offers holistic detection engine can capture any LoRa® traffic in the pre-defined frequency plan, assigning the detected packets to the pool of available modems for demodulation. Two modes are proposed for the modem assignment strategy, when timestamps are used:

• Higher Capacity:
Up to 8 packets at any given time can be received for any Spreading Factor. These packets are timestamped, with the exception of packets at SF11 and SF12 (data only).

• Timestamp for all Spreading Factors:
Up to 8 packets at Spreading Factor SF5-12 can be received at any time, including, at most, 4 packets at SF11 and/or SF12. All these packets will be timestamped.

1 high-speed multi-BW LoRa® modem (125, 250 or 500 kHz), handling a single declared SF, and 1 FSK modem is also available.

4. Application Information

The design represents a compact reference implementation of the SX1303, along with its power management, clocks, Front End Module, RF matching and filtering.

4.1. Geographical Designs

The suitability of the SX1302-based reference designs to national radio frequency regulations depends on the RF front-end device being used. With the SX1250/55/57 front-ends provided by Semtech, the expectation is:

• Up to +27 dBm supported in the USA, Canada or other FCC-type countries

• Up the +27 dBm in Europe and other ITU 1 regions

• Up to +21 dBm in Japan where the phase noise requirement is more stringent

Copyright © 2021 System Level Solutions (I) Pvt Ltd.
All rights reserved

4.2. Reference Block Diagram

The application block diagram is shown below:

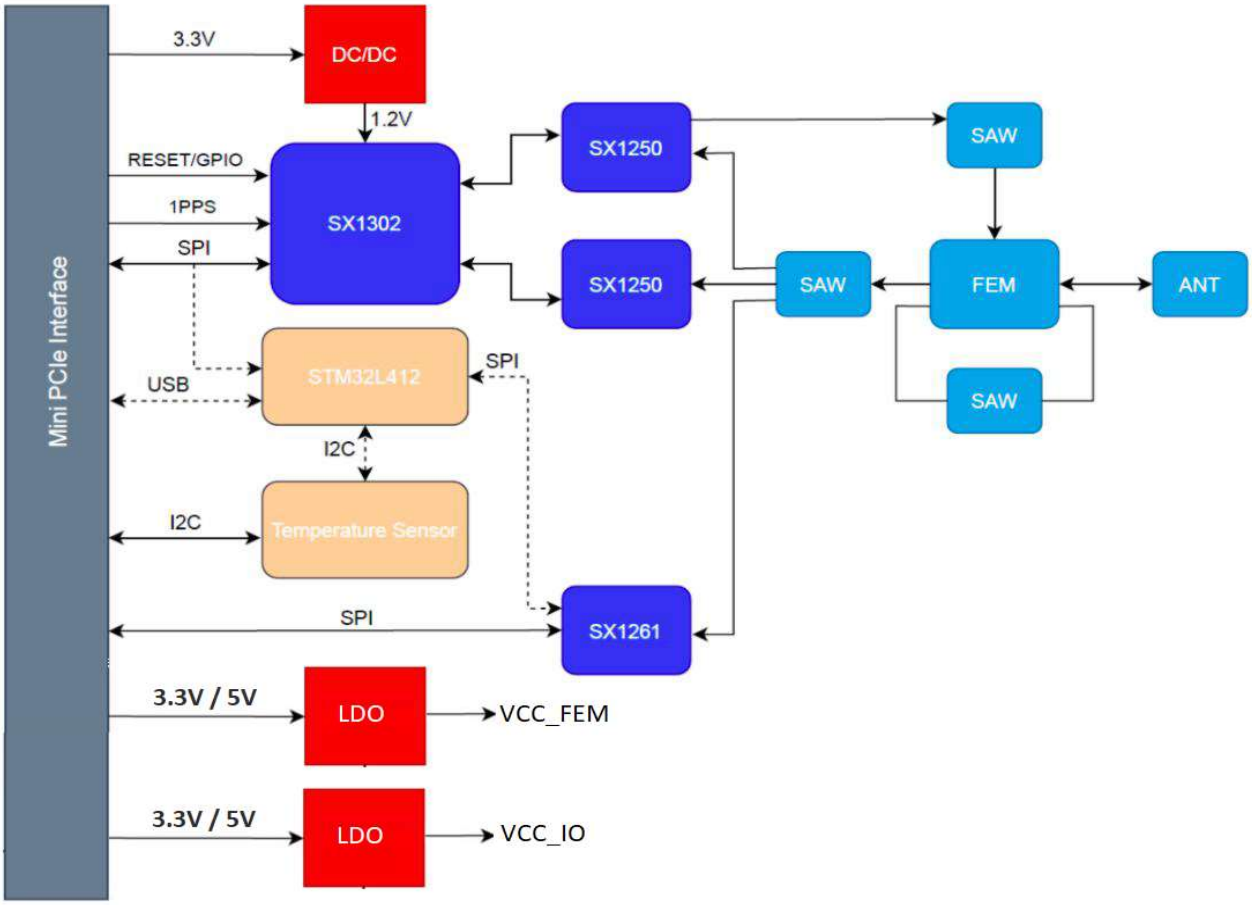

Figure 4-2-1: Application Design Block Diagram

4.3. RF Interface

The Concentrator has two different versions of the board which supports an RF interface for the 868 MHz & 915 MHz frequency band respectively. By connecting an appropriate antenna to the antenna connector, the concentrator is fully ready for communication.

4.4. External Module Connector

For easy integration into a target system and mounting of the concentrator on a carrier board, the headers on the module's bottom side can be used for these purposes (refer to the Table for the pin description).

Copyright © 2021 System Level Solutions (I) Pvt Ltd.
All rights reserved

4.4.1. SPI

The connector on the bottom side provides an SPI connection, which allows direct access to the SX1302 SPI interface. This gives the target system the possibility to use existing SPI interfaces to communicate to the concentrator board. After powering up the Concentrator it is required to reset SX1302 via PIN 13, refer to Table.

4.4.2. UART

The bottom connector provides a UART interface. This interface is for future use.

4.4.3. Digital IOs

There are two GPIOs of the SX1302 available, which gives the user some possibilities to get information about the system status.

4.4.4. LEDs

Various LED Indications are available on board for below functions:
- TX Packet
- RX Packet
- Power
- SX1302 Configuration

4.4.5. USB-Interface

USB configuration option available with STM32L412KBU6 MCU as USB to SPI bridge .
- direct plug and play option with all OS compatible.
- command base SX1302 configuration.

4.4.6. Others

- 1 x I2C : coming from host to the temperature sensor I2C interface
- SX1302 reset line

Copyright © 2021 System Level Solutions (I) Pvt Ltd.
All rights reserved

5. LoRa Systems, Network Approach

The use of LoRa® technology can be distinguished in “Public” and “Private” networks. In both cases the usage of a concentrator module can be reasonable. Public networks are operator (e.g. telecom) managed networks whereas private networks are individually managed networks.

LoRa networks are typically star or multiple star networks where a gateway relays the packets between the end-nodes and a central network server, see Figure 4-1. For private network approaches the server can also be implemented on the gateway host.

Due to the possible high range the connection between end-nodes and the concentrator is always a direct link. There are no repeaters or routers within a LoRa network.

Depending on the used spreading factor and signal bandwidth different data rates1 (0.3 kbps to ~22 kbps) and sensitivities down to -139 dBm are possible. Spreading factor and signal bandwidth are a trade-off between data rate and communication range.

5.1. Overview

The Concentrator is able to receive on different frequency channels at the same time and is able to demodulate the LoRa signal without knowledge of the used spreading factor of the sending node.

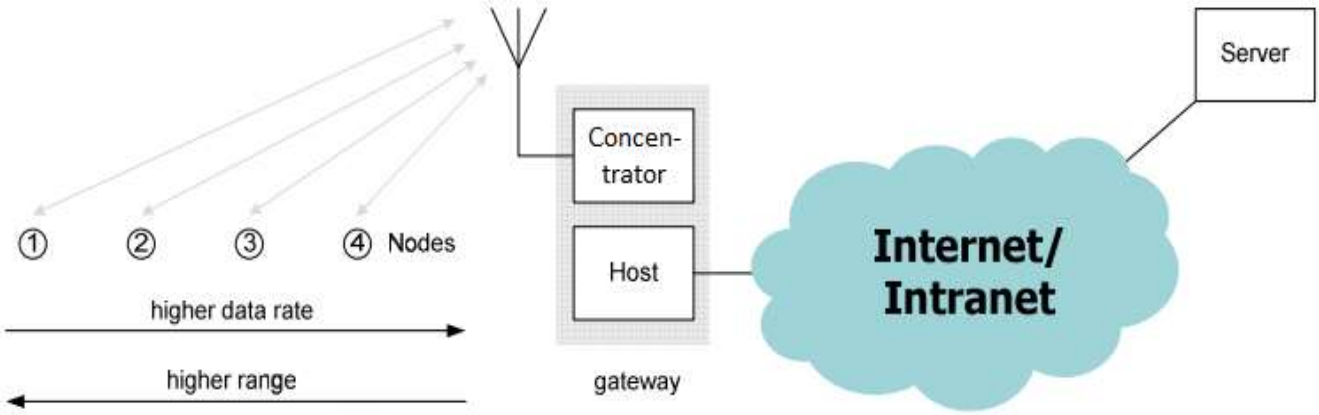

Figure 5-1-1: Public LoRa Network Approach

Due to the fact that the combination of spreading factors and signal bandwidths results in different data rates the use of “Dynamic Data-Rate Adaption” becomes possible. That means that LoRa nodes with high distances from the Concentrator must use higher spreading factors and therefore have a

Copyright © 2021 System Level Solutions (I) Pvt Ltd.
All rights reserved

lower data rate. LoRa nodes which are closer to the concentrator can use lower spreading factors and therefore can increase their data rate.

Due to the fact that spreading factors are orthogonal and Concentrator supports up to 10 demodulations paths the channel capacity of a LoRa cell can be increased using Concentrator compared to conventional modulation techniques.

6. Firmware

The LoRaWAN specification is currently driven by the LoRa Alliance™. Currently all available software, firmware and documentation can be found and downloaded from the open source project LoRa-net hosted on https://github.com/Lora-net

This project considers all parts that are needed to run a network based on LoRa technology. It includes the node firmware (several hardware platforms are supported), the gateway host software (HAL driver for SX1303, packet forwarder) and a server implementation.

It is highly recommended to re-use the Latest HAL as provided by us. Currently supported platforms are raspberry-pi, STM32MP157a and ec2X. It is recommended to read user-guide document for compilation and bring-up of the board for different platforms.

6.1. Cloning of Repository

Building the SX1303 HAL requires,

- GCC, GNU Make, Git, Bash

Open below link to clone SX1303 HAL and copy the git-URL.

- **https://github.com/github-sls/SX1303_hal**

Needs to execute below command on git bash to clone the SX1303 HAL repo.

- **git clone** https://github.com/github-sls/SX1303_hal

6.2. Compilation for Raspberry-PI Platform

To compile a SX1303 HAL for the using a Raspberry Pi Linux system as host, first clone the SX1303 HAL inside Raspberry pi.

- Go to sx1303 directory using below command.

  cd SX1303_hal

Copyright © 2021 System Level Solutions (I) Pvt Ltd.
All rights reserved

- If user have a temperature sensor support then needs to execute below command.

  make platform=rpi temp=true /* *platform={rpi, stm}, temp = {true, false}* */

- If user does not have a temperature sensor support then needs to execute below command.

  make platform=rpi temp=false /* *platform={rpi, stm}, temp = {true, false}* */

NOTE: Currently provided support of temperature sensor at compile time and GPS support can be configured from **global_json.conf** file.

6.3. Compilation For Other Platforms

To cross compile HAL of SX1303, need to either export or source the environment variable.

- Set tool-chain path in **PATH** environment variable where platform specific compilation tools are available like gcc, ld, g++,gdb etc.
- Need to export CROSS_COMPILE, ARCH, LD, AR environment variables.
- Set sysroot path for all libraries and include path if needed. It can be set by adding

  --sysroot argument with CFLAGS in target.cfg.
- Find **target.cfg,** Where all platform-wise CFLAGS are given. Add and configure platform and also add extra CFLAGS if needed.
- Need to validate new platform to **prep.sh** and **target.cfg**. Find **platformcheck** rule inside **target.cfg** and add platform validation condition for that.
- **cd SX1303 and apply make platform=<platform-name> temp={true, false}.**

6.4. Interface Availability

To run binaries properly with concentrator board, host or running platform should have below interfaces available.

- **SPI:** SX1303 performs communication via SPI protocol with Host platform as well as both the end-radios. SPI must be enable on host platform and path of should be created inside /*dev/* directory of host. e.x.: ***/dev/*spidev0.0.**
- **I2C:** I2C is used for on-board temperature monitoring. I2C port should be enabled for host platform and it has also proper /dev/ entry. e.x.: ***/dev/*i2c-1**
- **UART**: UART is used for on-board GPS monitoring. Proper UART should be enabled and it has also proper /dev/ entry too. e.x.: /**dev/ttyAMA0.**

Copyright © 2021 System Level Solutions (I) Pvt Ltd.
All rights reserved

For raspberry-pi, configure SPI, I2C and UART settings via raspi-config.

For Other platform to configure SPI, I2C and UART, Please go through the user-guide for that platform. Most common way to configure SPI for linux based platform is to use “make menuconfig” or via dtsi file. After changes build the kernel image and flash the image.

6.5. STM Platform

To clone and compile for STM32MP157a and other board bring-up related things, please follow below document.

https://wiki.st.com/stm32mpu/wiki/Getting_started

7. Electrical Characteristics & Timing specifications

In the following different electrical characteristics of the Concentrator are listed. Furthermore details and other parameter ranges are available on request.

Note: Stress exceeding of one or more of the limiting values listed under “Absolute Maximum Ratings” may cause permanent damage to the radio module.

7.1. Absolute Maximum Ratings

Parameter	Condition	Min	Typ.	Max	Unit
Supply Voltage (VDD)		-0.3	3.3	3.6	V
Operating Temperature		-40		+85°C	°C
RF Input Power			+25		dBm

Note: With RF output power level above +15 dBm a minimum distance to a transmitter should be 1 m for avoiding too large input level.

Copyright © 2021 System Level Solutions (I) Pvt Ltd.
All rights reserved

7.2. Global Electrical Characteristics

T = 25°C, VDD = 3.3V (typ.) if nothing else stated

Parameter	Condition	Min	Typ.	Max	Unit
Supply Voltage (VDD)		3.0	3.3	3.6	V
Receiver Current Consumption	medium activity (2 radios, 4 active paths)				mA
	high activity (2radios, 10 active paths)				

T = 25°C, VCC_IO = 3.3 V (typ.) if nothing else stated

Parameter	Condition	Min	Typ.	Max	Unit
Logic low input threshold (VIL)	"0" logic input	-0.3	-	0.3*VCC_IO	V
Logic high input threshold (VIH)	"1" logic input	0.7*VCC_IO	-	VCC_IO + 0.3	V
Logic low ouput level (VOL)	"0" logic output, Imax = 8mA	0	-	0.4	V
Logic high output level (VOH)	"1" logic output, Imax = -8 mA	VCC_IO – 0.6	-	VCC_IO	V

7.3. SPI Interface Characteristics

All timings are given in next table for Max load cap of 10 pF.

Parameter	Condition	Min	Typ.	Max	Unit
Timing constraints in SPI inputs					
tSPI,SCK	SCK period	100			ns
tSPI,SCKH	SCK high duration	40			ns
tSPI,SCKL	SCK low duration	40			ns

Copyright © 2021 System Level Solutions (I) Pvt Ltd.
All rights reserved

tSPI,SCKR	SCK rise time (10% VCC_IO ->90% VCC_IO)	0	2.5		ns
tSPI,SCKF	SCK fall time (90% VCC_IO ->10% VCC_IO)	0	2.5		ns
tSPI,DELAY	SCK lead time	40			ns
tSPI,QUIET	SCK trail time	40			ns
tSPI,CSH	Time between two successive CSN chip select	250			ns
tSPI,CSR	CSN rise time (10% VCC_IO ->90% VCC_IO)	0	2.5		ns
tSPI,CSF	CSN fall time (90% VCC_IO ->10% VCC_IO)	0	2.5		ns
tSPI,SETUP	Data in setup time	5			ns
tSPI,HOLD	Data in hold time	5			ns
SPI output timing specification					
tSPI,DOEN	SPI output enable time	0		10	ns
tSPI,DODIS	SPI output disable time	0		10	ns
tSPI,DOV	SCK out falling edge to MISO delay			15	ns

Copyright © 2021 System Level Solutions (I) Pvt Ltd.
All rights reserved

Version: 1.0
Document Classification: Internal

7.4. RF Characteristics

7.4.1. Transmitter RF Characteristics

The Concentrator has an excellent transmitter performance, which generally give a lot of possible settings for the power amplifier of the Concentrator. It is highly recommended, to use an optimized configuration for the power level configuration.

The Concentrator is specified for a max. RF output power of +27 dBm. Long-term operating of the Concentrator with more than +27 dBm can destroy the internal power amplifier of Concentrator. Especially in case of operating the Concentrator with the github software it need to be ensured, that the maximum RF output power of +27 dBm is not exceeded. Therefore the settings of the global_conf.json might need to be changed accordingly.

T = 25°C, VDD = 3.3 V (typ.), 866.5 MHz if nothing else stated

Parameter	Condition	Min	Typ.	Max	Unit
Frequency Range	-	902	-	928	MHz
Modulation Techniques	FSK / LoRa™	-	+/-3	-	kHz
TX Frequency Variation vs. Temperature	-5°C to +55°C		+/-1		PPM
TX Power Variation vs. Temperature[1]	Max. power level, -5°C to +55°C		+/- 1		dB
	Max. power level, -40°C to +85°C		+/- 1		dB
TX Power Variation vs. Frequency	Max. power level		+/- 0.5		dB
TX Current Consumption	RX		40		mA
	Standby		7.5		mA
	TX (maximum power Level)		425		mA

[1]Operational temperature range can be basically extended to -40°C to +85°C, but a larger power level drift vs. temperature need to be expected. In addition it is recommended, to use optimized TX settings which are also individually adapted to the temperature.

Copyright © 2021 System Level Solutions (I) Pvt Ltd.
All rights reserved

7.4.2. Receiver RF Characteristics

It is highly recommended, to use optimized RSSI calibration values. For both, Radio 1 and 2, the RSSI-Offset should be set to -169. The following table gives typically sensitivity level of the Concentrator:

Signal Bandwidth/[kHz]	Spreading Factor	Sensitivity/[dBm]
125	12	-139
125	7	-125
250	12	-139
250	7	-125
500	12	-139
500	7	-125

8. Module Package

In the following the Concentrator module package is described. This description includes the Concentrator pinout as well as the modules dimensions.

8.1. Pin out

The Concentrator provides headers at the bottom side, which have a pitch of 2.54 mm. The description of the pins is given by Table below. An additional overview gives Figure 8-1-1.

Copyright © 2021 System Level Solutions (I) Pvt Ltd.
All rights reserved

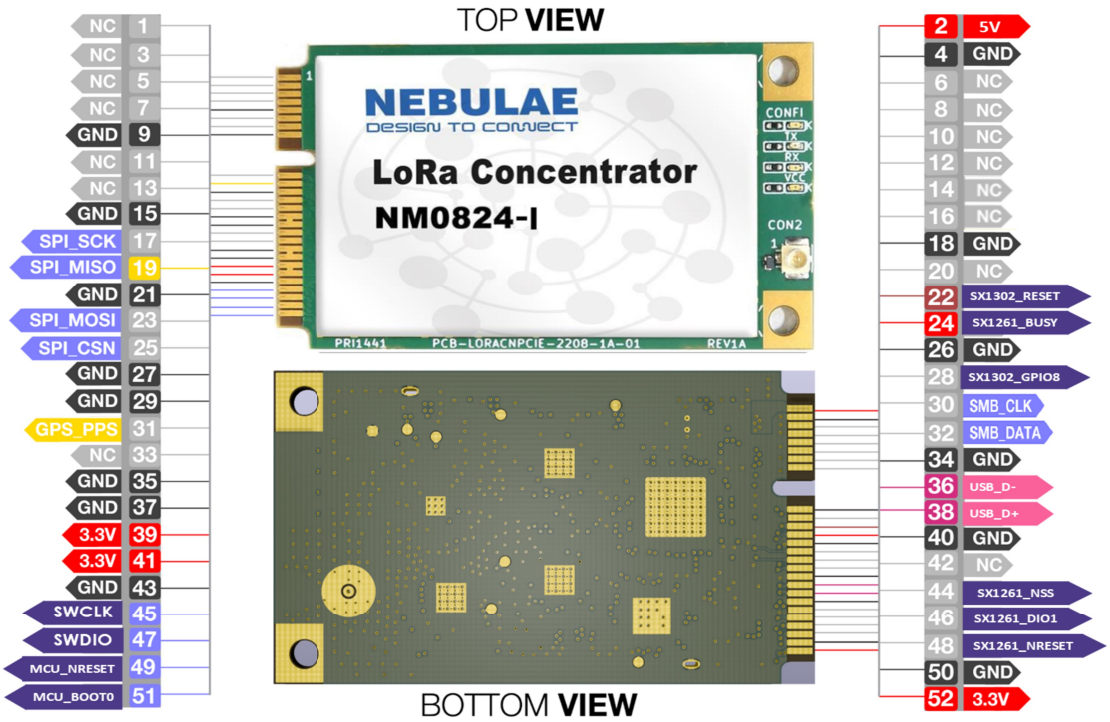

Figure 8-1-1 Concentrator outlines and pins of bottom connector in top view

Note: MISO-signal is always low impedance. Do not share with other MISO-signal by direct connection.

Pin	Pin Name	Pin Type	Description
1	NC	NC	Reserved
2	VDD	Power	Optional +5.0V Supply Voltage(To be used if input supply to the board is +5.0V instead of +3.3V)
3	NC	NC	Reserved
4	GND	Power	System Ground
5	NC	NC	Reserved
6	NC	NC	Reserved
7	NC	NC	Reserved
8	NC	NC	Reserved
9	GND	Power	System Ground

Copyright © 2021 System Level Solutions (I) Pvt Ltd.
All rights reserved

Version: 1.0
Document Classification: Internal

10	NC	NC	Reserved
11	NC	NC	Reserved
12	NC	NC	Reserved
13	NC	NC	Reserved
14	NC	NC	Reserved
15	GND	Power	System Ground
16	NC	NC	Reserved
17	SPI_SCK	Input	SX1302 SPI-Clock
18	GND	Power	System Ground
19	SPI_MISO	Output	SX1302 SPI-MISO
20	NC	NC	Reserved
21	GND	Power	System Ground
22	SX1302_RESET	Reset	SX1302 Asynchronous Reset Input
23	SPI_MOSI	Input	SX1302 SPI-MOSI
24	SX1261_BUSY	O	SX1261 Busy indicator Output
25	SPI_CSN	Input	SX1302 SPI-Chip Select
26	GND	Power	System Ground
27	GND	Power	System Ground
28	SX1302_GPIO8	I/O	SX1303 General purpose IO
29	GND	Power	System Ground
30	SMB_CLK	Input	I2C Clock line for on-board temperature sensor
31	GPS_PPS	Input	Optional Time pulse (1PPS) from GPS
32	SMB_DATA	I/O	I2C Data line for on-board temperature sensor
33	NC	NC	Reserved
34	GND	Power	System Ground
35	GND	Power	System Ground
36	USB_D-	I/O	USB differential D+ (for USB to SPI Bridge)
37	GND	Power	System Ground
38	USB_D+	I/O	USB differential D+ (for USB to SPI Bridge)
39	VDD	Power	+3.3V Supply Voltage
40	GND	Power	System Ground

Copyright © 2021 System Level Solutions (I) Pvt Ltd.
All rights reserved

42	NC	NC	Reserved
43	GND	Power	System Ground
44	SX1261_NSS	Input	SX1261 SPI-Chip Select
45	SWCLK	I/O	STM32 Programing clock pin
46	SX1261_DIO1	I/O	SX1303 General purpose IO
47	SWDIO	I/O	STM32 Programing data IO pin
48	SX1261_NRESET	Reset	SX1261 Reset Input
49	MCU_NRESET	Reset	STM32 Reset Input
50	GND	Power	System Ground
51	MCU_BOOT0	I/O	MCU STM32 Boot mode pin.
52	VDD	Power	+3.3V Supply Voltage

8.2. Module Dimensions

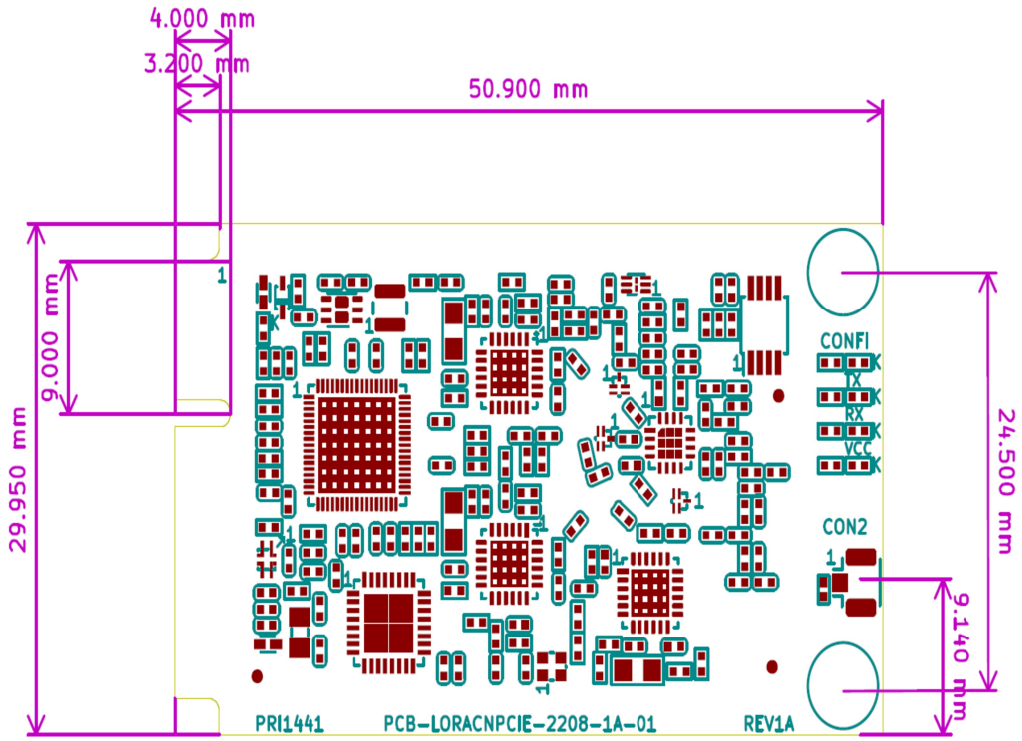

Figure 8-2-1: Concentrator outlines and pins of bottom connector in top view

Copyright © 2021 System Level Solutions (I) Pvt Ltd.
All rights reserved

Version: 1.0
Document Classification: Internal

The outer dimensions of the Concentrator are given by 51.00 X 30.00 SQ mm ± 0.2 mm. The Concentrator provide two drills for screwing the PCB to another unit each with a drill diameter of 2.6 mm.

9. Ordering Information

Ordering Part Number	Description	Distributor
	Concentrator Module with SPI interface	
	Concentrator Module with USB interface	

10. Restrictions and Limitations

10.1. Hardware Restrictions and Limitations

The characteristic values given by the present document are typically obtained by measurements based on evaluation kits of the entitled device. Using other carrier boards or connected equipment might lead to different characteristics. Subject to given measurement results the characteristic values might show the best performance of the entitled device, independent from any compliancy restriction of final operation purposes.

10.2. Software Restrictions and Limitations

The present document is a datasheet of the entitled device which intentional use is to provide information about basic characteristics related to the device hardware. Typically all described characteristic values require software for obtaining them accordingly. All features of the available software are subject to changes without claim to be complete at any time. Characteristically values might also be provided based on datasheets of the appropriate key components unless there are test results available based on the available software.

10.3. Compliance Restrictions and Limitations

The entitled device has been designed to comply with the standards namely given in the present document. The intentional operation shall be in so called ISM bands, which can be used free of charge within the European Union and typically licences free all over the world. Nevertheless, restrictions such as maximum allowed radiated RF power or duty cycle may apply which might result in a reduction of these parameters accordingly.

Copyright © 2021 System Level Solutions (I) Pvt Ltd.
All rights reserved

In addition, the use of radio frequencies might be limited by national regulations which requirements also need to be met.

In case the entitled device will be embedded into other products (referred as “final products”), the manufacturer for this final product is responsible to declare the conformity to required standards accordingly. A proof of conformity for the entitled device is available from SLS on request. Beside the entitled device the conformity also considers software as well as supporting hardware characteristics which might also have an impact accordingly.

The applicable regulation requirements are subject to change. SLS does not take any responsibility for the correctness and accuracy of the aforementioned information. National laws and regulations, as well as their interpretation can vary with the country. In case of uncertainty, it is recommended to contact either SLS’s accredited Test Center or to consult the local authorities of the relevant countries.

10.4. Disclaimer

SLS points out that all information in this document are given on an “as is” basis. No guarantee, neither explicit nor implicit is given for the correctness at the time of publication. SLS reserves all rights to make corrections, modifications, enhancements, and other changes to its products and services at any time and to discontinue any product or service without prior notice. It is recommended for customers to refer to the latest relevant information before placing orders and to verify that such information is current and complete. All products are sold and delivered subject to “General Terms and Conditions” of SLS, supplied at the time of order acknowledgment. SLS assumes no liability for the use of its products and does not grant any licenses for its patent rights or for any other of its intellectual property rights or third-party rights. It is the customer’s duty to bear responsibility for compliance of systems or units in which products from SLS are integrated with applicable legal regulations. Customers should provide adequate design and operating safeguards to minimize the risks associated with customer products and applications. The products are not approved for use in life supporting systems or other systems whose malfunction could result in personal injury to the user. Customers using the products within such applications do so at their own risk.

Any reproduction of information in data sheets of SLS is permissible only if reproduction is without alteration and is accompanied by all given associated warranties, conditions, limitations, and notices. Any resale of SLS products or services with statements different from or beyond the parameters stated by SLS for that product/solution or service is not allowed and voids all express and any implied warranties. The limitations on liability in favor of SLS shall also affect its employees, executive personnel and bodies in the same way. SLS is not responsible or liable for any such wrong statements.

Copyright © 2021-2022, SLS

11. Appendix

11.1. List of Abbreviations

GND	Ground
GPIO	General Purpose Input/Output
GPS	Global Positioning System
HAL	Hardware Abstraction Layer
IF	Intermediate Frequency
IoT	Internet of Things
ISM	Industrial, Scientific and Medical
M2M	Machine to Machine
MCU	Microcontroller Unit
PCB	Printed Circuit Board
PPS	Pulse Per Second
RF	Radio Frequency
SNR	Signal to Noise Ratio
SPI	Serial Peripheral Interface

11.2. References

[1] Semtech, White Paper LoRa Modulation from www.semtech.com

[2] ERC Recommendation 70-03 “Relating to the use of Short Range Devices (SRD)”, Tromsø 1997, CEPT ECC subsequent amendments 13 October 2017

[3] Semtech, SX1303 Data Sheet from www.semtech.com

Copyright © 2021 System Level Solutions (I) Pvt Ltd.
All rights reserved

12. FCC regulatory information

This device complies with Part 15 of the FCC Rules. Operation is subject to the following two conditions: (1) this device may not cause harmful interference, and (2) this device must accept any interference received, including interference that may cause undesired operation. Warning: changes or modifications not expressly approved by the party responsible for compliance could void the user's authority to operate the equipment.

12.1. End Device Labeling

Please notice that if the FCC identification number is not visible when the module is installed inside another device, then the outside of the device into which the module is installed must also display a label referring to the enclosed module. This exterior label can use wording such as the following: "Contains FCC ID: 2AO93 - NM0824-I any similar wording that expresses the same meaning may be used.

21.2. RF Exposure Compliance

This equipment complies with FCC radiation exposure limits set forth for an uncontrolled environment. This equipment should be installed and operated with a minimum distance of 20cm between the radiator & your body. This transmitter must not be co-located or operating in conjunction with any other antenna or transmitter.

21.3. Installation Notice

The module is limited to OEM installation ONLY. The OEM integrator is responsible for ensuring that the end-user has no manual instruction to remove or install module. The module is limited to installation in mobile application; A separate approval is required for all other operating configurations, including portable configurations with respect to Part 2.1093 and difference antenna configurations.

12.4. FCC Part 15B Compliance of End Device

The OEM integrator is responsible for ensuring that the host product which is installed and operating with the module is in compliant with Part 15B unintentional Radiator requirements, please note that For a Class B digital device or peripheral, the instructions furnished the user manual of the end-user product shall include the following or similar statement, placed in a prominent location in the text of the manual:
Note: This equipment has been tested and found to comply with the limits for a Class B digital device, pursuant to part 15 of the FCC Rules. These limits are designed to provide reasonable protection against harmful interference in a residential installation. This equipment generates,
uses and can radiate radio frequency energy and, if not installed and used in accordance with the instructions, may cause harmful interference to radio communications. However, there is no guarantee that interference will not occur in a particular installation. If this equipment does cause harmful interference to radio or television reception, which can be determined by turning the equipment off and on, the user is encouraged to try to correct the interference by one or more of the following measures:

Copyright © 2021 System Level Solutions (I) Pvt Ltd.
All rights reserved

— Reorient or relocate the receiving antenna.
— Increase the separation between the equipment and receiver.
— Connect the equipment into an outlet on a circuit different from that to which the receiver is connected.
— Consult the dealer or an experienced radio/TV technician for help.

12.5. FCC ID: 2AO93 - NM0824-I

Conditions on using SLS regulatory approvals:

A. Customer must ensure that its product (the “CUSTOMER Product”) is electrically identical to SLS reference designs. Customer acknowledges that any modifications to SLS reference designs may invalidate regulatory approvals in relation to the CUSTOMER Product, or may necessitate notifications to the relevant regulatory authorities.

B. Customer is responsible for ensuring that antennas used with the product are of the same type, with same or lower gains as approved and providing antenna reports to SLS.

C. Customer is responsible for regression testing to accommodate changes to SLS reference designs, new antennas, and portable RF exposure safety testing/approvals.

D. Appropriate labels must be affixed to the CUSTOMER Product that comply with applicable regulations in all respects.

E. A user’s manual or instruction manual must be included with the customer product that contains the text as required by applicable law. Without limitation of the foregoing, an example (for illustration purposes only) of possible text to include is set forth below:
1. USA—Federal Communications Commission (FCC)

FCC COMPLIANCE STATEMENT:

This device complies with part 15 of the FCC Rules. Operation is subject to the following two conditions:

(1) This device may not cause harmful interference, and (2) this device must accept any interference received, including interference that may cause undesired operation.

INFORMATION TO USER:

This equipment has been tested and found to comply with the limits for a Class B digital device, pursuant to Part 15 of FCC Rules. These limits are designed to provide reasonable protection against harmful interference in a residential installation. This equipment generates, uses, and can radiate radio frequency energy. If not installed and used in accordance with the instructions, it may cause harmful interference to radio communications. However, there is no guarantee that interference will not occur in a particular installation. If this equipment does cause harmful interference to radio or

Copyright © 2021 System Level Solutions (I) Pvt Ltd.
All rights reserved

television reception, which can be determined by tuning the equipment off and on, the user is encouraged to try and correct the interference by one or more of the following measures:

-Reorient or relocate the receiving antenna
-Increase the distance between the equipment and the receiver.
-Connect the equipment to outlet on a circuit different from that to which the receiver is connected.
-Consult the dealer or an experienced radio/TV technician for help.

FCC Caution:

Any changes or modifications not expressly approved by the party responsible for compliance could void the user's authority to operate this equipment. System integrators must include the FCC ID on the end product.

FCC Radio-Frequency Exposure & Approval Conditions:

1. Transmitting antenna(s) can only be installed at the display section of computer. When this device is installed other than notebook computers, at least 20 cm separation distance shall be maintained between the transmitting antenna(s) to the body of user or nearby person.

2. The antenna(s) used for this transmitter must not be collocated or operating in conjunction with any other antenna or transmitter within a host device, except in accordance with FCC multi-transmitter product procedures.

3. The regulatory label on the final system must include the statement: “Contains FCC ID: 2AO93 – NM0824-I using electronic labeling method as documented in KDB 726920 D01.

4. The final system integrator must ensure there is no instruction provided in the user manual or customer documentation indicating how to install or remove the transmitter module except such device has implemented two-ways authentication between module and the host system.

5. The final host manual shall include the following regulatory statement: This equipment has been tested and found to comply with the limits for a Class B digital device, pursuant to Part 15 of FCC Rules. These limits are designed to provide reasonable protection against harmful interference in a residential installation. This equipment generates, uses, and can radiate radio frequency energy. If not installed and used in accordance with the instructions, it may cause harmful interference to radio communications. However, there is no guarantee that interference will not occur in a particular installation. If this equipment does cause harmful interference to radio or television reception, which can be determined by tuning the equipment off and on, the user is encouraged to try and correct the interference by one or more of the following measures:

-Reorient or relocate the receiving antenna
-Increase the distance between the equipment and the receiver.
-Connect the equipment to outlet on a circuit different from that to which the receiver is connected.
-Consult the dealer or an experienced radio/TV technician for help.

Copyright © 2021 System Level Solutions (I) Pvt Ltd.
All rights reserved

This device complies with Part 15 of the FCC Rules. Operation is subject to the following two conditions: (1) This device may not cause harmful interference, and (2) this device must accept any interference received, including interference that may cause undesired operation.

FCC INFORMATION (additional)

This device is intended only for OEM integrators under the following conditions: The module must be installed in the host equipment such that 20 cm is maintained between the antenna and users, and the transmitter module may not be co-located with any other transmitter or antenna. The module shall be only used with the internal antenna(s) that has been originally tested and certified with this module. As long as 3 conditions above are met, further transmitter test will not be required. However, the OEM integrator is still responsible for testing their end-product for any additional compliance requirements required with this module installed (for example, digital device emissions, PC peripheral requirements, etc.).

Module label:
FCC ID: 2AO93 - NM0824-I

The final end product must be labeled in a visible area with the following: “Contains FCC ID:2AO93 - NM0824-I. Information that must be placed in the end user manual: The OEM integrator has to be aware not to provide information to the end user regarding how to install or remove this RF module in the user's manual of the end product which integrates this module. The end user manual shall include all required regulatory information/warning as show in this manual. The module not applicable Limited module procedures. The module is a Single module and complies with the requirement of FCC Part 15.2 The module has its own antenna, and doesn't need a host's printed board micro strip trace antenna etc, Not applicable Trace antenna designs

CFR 47 FCC PART 15 SUBPART C have been investigated. It is applicable to the modular transmitter.

This radio transmitter NM0824-I has been approved by Federal Communications Commission to operate with the antenna types, with the maximum permissible gain indicated. Antenna types not included in this list that have a Gain greater than the maximum gain indicated for any type listed are strictly prohibited for use with this device

Operation frequency:902.3MHz to 914.9MHz
903.0MHz to 927.5MHz
Modulation Technology: CSS
Antenna Gain: 2.7 dBi

Information on test modes and additional testing requirements: Host manufacturer is strongly recommended to confirm compliance with FCC requirements for the transmitter when the module is installed in the host.

Copyright © 2021 System Level Solutions (I) Pvt Ltd.
All rights reserved