NebuLink Node NLN 100C

Datasheet

System Level Solutions, Inc. (USA)
511 N. Washington Avenue
Marshall, Texas 75670.
(408) 852 - 0067

http://www.slscorp.com

Node Version: 1A
Document Version: 1.2
Document Date: November 2019

Copyright ©2019, System Level Solutions, Inc. (SLS) All rights reserved. SLS, an Embedded systems company, the stylized SLS logo, specific device designations, and all other words and logos that are identified as trademarks and/or service marks are, unless noted otherwise, the trademarks and service marks of SLS in India and other countries. All other products or service names are the property of their respective holders. SLS products are protected under numerous U.S. and foreign patents and pending applications, mask working rights, and copyrights. SLS reserves the right to make changes to any products and services at any time without notice. SLS assumes no responsibility or liability arising out of the application or use of any information, products, or service described herein except as expressly agreed to in writing by SLS. SLS customers are advised to obtain the latest version of specifications before relying on any published information and before orders for products or services.

ds_nln100c_1.2

About this Manual

Revision History

Table below shows the revision history of NebuLink Node NLN 100C's datasheet.

Version	Date	Description
1.2	November 2019	Added note in Table 1-1
1.1	April 2019	Added Figure 1.1 and Chapter 4 Updated Table 1.1 in Chapter 1
1.0	July 2018	First publication

How to Contact SLS

For the most up-to-date information about SLS products, go to the SLS worldwide website at http://www.slscorp.com. For additional information about SLS products, consult the source shown below

Information Type	E-mail
Product literature services, SLS literature services, Non-technical customer services, Technical support.	support@nebulae.io

Typographic Conventions

This datasheet uses the typographic conventions as shown below:

Visual Cue	Meaning
Bold Type with Initial Capital letters	All headings and Sub headings Titles in a document are displayed in bold type with initial capital letters; Example: **General Description, Features.**
Bold Type with Italic Letters	All Definitions, Figure and Table Headings are displayed in Italics. Examples: ***Figure 1-1. NebuLink Node NLN 100C,*** **Table 1-1. NebuLink Node NLN 100C Specifications.**
1., 2.	Numbered steps are used in a list of items, when the sequence of items is important. such as steps listed in procedure.
•	Bullets are used in a list of items when the sequence of items is not important.
☞	The hand points to special information that requires special attention
CAUTION	The caution indicates required information that needs special consideration and understanding and should be read prior to starting or continuing with the procedure or process.
WARNING	The warning indicates information that should be read prior to starting or continuing the procedure or processes.
	The feet direct you to more information on a particular topic.

Contents

About this Manual ..... *iii*
Revision History iii
How to Contact SLS iii
Typographic Conventions iv

1. Overview 1
General Description 1
Benefits 2
Specifications 5
Node Accessories 6

2. Pin-Out Information 7

3. Package Information 10

4. Test Report 12

1. Overview

General Description

The NebuLink Node NLN 100C provides a means for any electronic device to implement low cost wireless connectivity. This Node inter operates with either Zigbee or 6LoWPAN devices depending on the programmed stack.

NLN 100C is ideal for applications in the energy and controls markets where manufacturing efficiencies are critical.

The NLN 100C, built around the NXP JN5169 SoC (system on a chip) radio IC, integrates an 802.15.4 radio along with a powerful programmable 32-bit RISC CPU. The architecture isolates the wireless software without sacrificing RF performance or security for applications. Thus, allows to create customized applications quickly and efficiently. Figure 1-1. shows an overview of the product.

Figure 1-1. NebuLink Node NLN 100C Overview

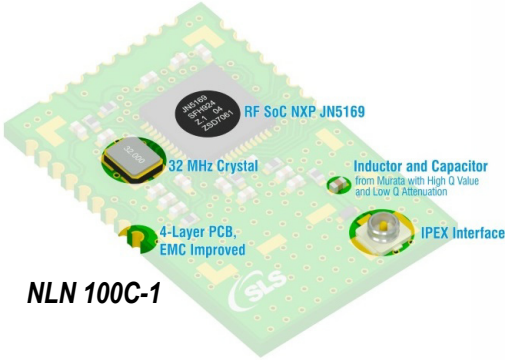

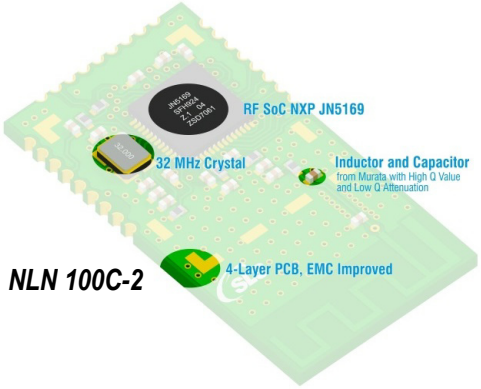

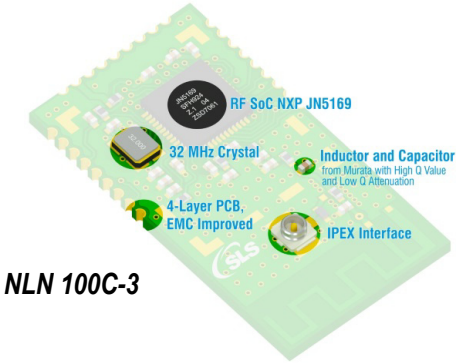

Benefits

The main benefits of the NebuLink Node NLN 100C are:

- Customizable Zigbee and 6LoWPAN applications with a programmable CPU
- A rich set of hardware peripherals such as GPIO, UART, SPI, I2C, ADC, and PWM
- A great choice for battery oriented applications with various sleep modes
  - Sleep with IO wake up
  - RAM Retention
  - Low Power mode

- Deep Sleep mode

- Comes in three variants based on Antenna type
  - U.FL Connector (NLN 100C-1) for External Antenna
  - PCB Antenna (NLN 100C-2)
  - PCB Antenna or U.FL Antenna (NLN 100C-3)
- Provides an OTA (Over the Air) Firmware update mechanism
- Supports Mesh networking for both Zigbee and 6LoWPAN
- Supports deployment of a dense network with 6LoWPAN

Figure 1-2. shows the NebuLink Node NLN 100C.

Figure 1-2. NebuLink Node NLN 100C

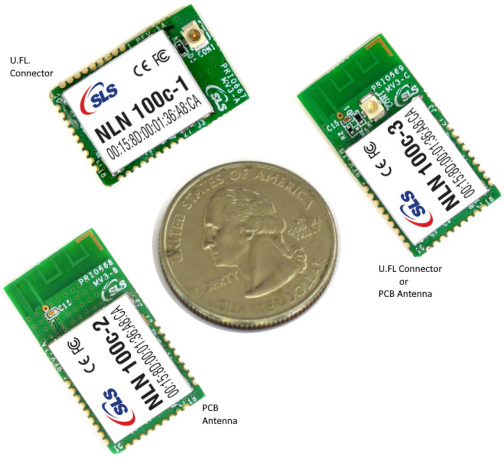

Figure 1-3. shows NebuLink Node NLN 100C application example.

Figure 1-3. NebuLink Node NLN 100C Application Example

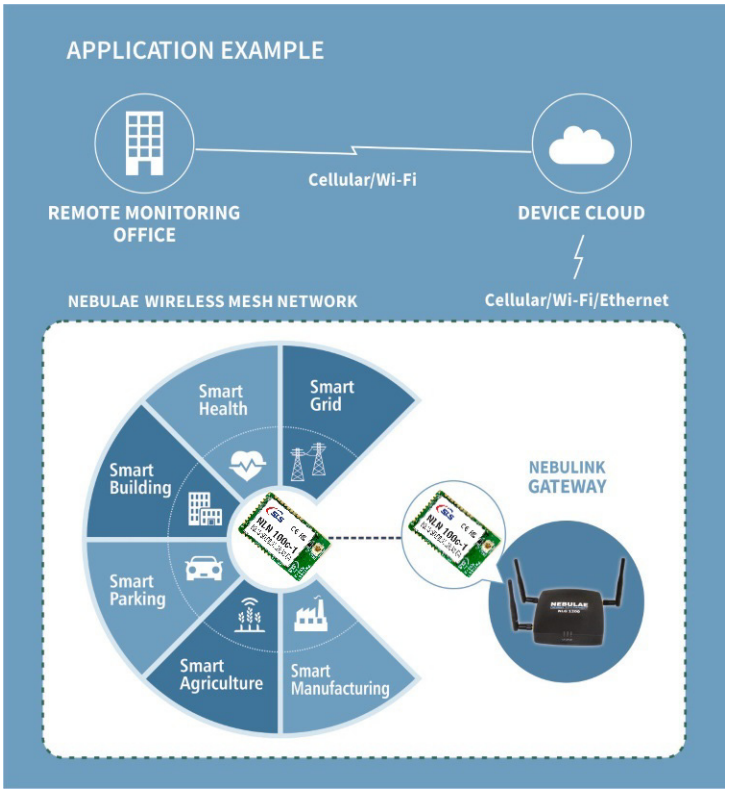

Specifications

Table 1-1. describes specifications of the NebuLink Node NLN 100C.

Table 1-1. NebuLink Node NLN 100C Specifications			
Performance			
Data Rate	Up to 250Kbps		
Range*	80 Meters Line of Sight (LoS) with Antenna 2dBi Gain		
TX Current Consumption	26.8mA@ +10dBm; 19.6mA@ +8.5dBm; 14mA @ +3dBm		
RX Current Consumption	19.6mA@ +10dBm; 13mA@ 0dBm		
RX Sensitivity	-96 dBm @ 1% PER		
Features			
Processor	32 Bit RISC		
Clock/ Speed	1 MHz to 32 MHz		
Memory	512 kB Flash, 32 kB RAM, 4 kB EEPROM		
Modes	Active, Sleep and Deep Sleep		
Frequency Band	ISM 2.4 GHz		
Interference Immunity	DSSS (Direct Sequence Spread Spectrum)		
Serial Interface	1 x SPI with 3 Chip Selects, 1 x I2C, 2 x UART		
ADC Inputs	Up to 6-input 10-bit		
Digital IO	Up to 20		
PWM, Timer, Counter	Up to 5 PWM, 4 x Timers, 1 x Counter		
Mounting Type	27 pins, 1.27 mm Pitch SMD Node		
Antenna Options	U.FL Connector	PCB Antenna	U.FL Connector and PCB Antenna
Size (LxWxH in mm)	24.59 x 16 x 2.65	29.94 x 16 x 2.65	29.94 x 16 x 2.65
Electrical Specification			
Supply Voltage	2.0V to 3.6V DC		
Current Consumption per Modes	Sleep	2.23 µA	
	Deep Sleep	0.66 µA	
Operating Temperature#	-40 ºC to 85 ºC		
Storage Temperature#	-40 ºC to 125 ºC		

Table 1-1. NebuLink Node NLN 100C Specifications	
Networking and Security	
Protocol	6LoWPAN, Zigbee, Thread, 802.15.4 Proprietary
Encryption	AES 128 Bit
Channels	16
Note: * Tested in standard laboratory conditions # Ideal temperature condition based on component's rating	

Node Accessories

NLN 100C comes with an external antenna. Table 1-2. provide the details of the external antenna.

Table 1-2. Node Accessory Details	
External Antenna	
Model	LC17-W-402-N-RPSMA
Manufacturer	ZHEJIANG JC ANTENNA CO. LTD
Gain	2 dBi
Type	Whip-Tilt
Connection Type	RP-SMA
Frequency Range	2400 MHz - 2483.5 MHz
Node to Antenna Connection Type	U.FL to RP-SMA Cable
U.FL to RP-SMA Cable	
Model	LC17-Cable-SMA Female RP-IPEX-100mm
Manufacturer	ZHEJIANG JC ANTENNA CO. LTD
Frequency Range	700 MHz - 2500 MHz
Cable Length	100.0 ± 5.0 mm

2. Pin-Out Information

Table 2-1. shows the NebuLink Node NLN 100C Pin-Out.

Table 2-1. NebuLink Node NLN 100C Pin-Out

Pin No #	Signal Name	Direction	Default State	Description
1	ADC1	Input	-	Analog to Digital Input
2	DO0 / SPICLK / PWM2	Output	-	SPI Master Clock Output or PWM2 Output
3	DO1 / SPIMISO / PWM3	Output	-	SPI Master In Slave Out Input or PWM3 Output
4	DIO18 / SPIMOSI	Bidirectional	-	SPI Master Out Slave In Output
5	DIO19 / SPISEL0	Bidirectional	-	SPI Select From Node – SS0 Output
6	DIO0 / SPISEL1 / ADC3	Bidirectional	-	DIO0, SPI Slave Select Output 1 or ADC input 3
7	DIO1 / SPISEL2 / ADC4 / PC0	Bidirectional	-	DIO1, SPI Slave Select Output 2, ADC input 4 or Pulse Counter 0 input
8	DIO2 / RFRX / TIM0CK_GT	Bidirectional	-	DIO2, Radio Receive Control Output or Timer0 Clock/Gate Input
9	DIO3 / RFTX / TIM0CAP	Bidirectional	-	DIO3, Radio Transmit Control Output or Timer0 Capture
10	DIO4 / CTS0 / JTAG_TCK / TIM0OUT / PC0	Bidirectional	-	DIO4, Input JTAG_TCK TIM0OUT PC0 CMOS, UART 0 Clear To Send Input, JTAG CLK Input, Timer0 PWM output or Pulse Counter 0 Input

Table 2-1. NebuLink Node NLN 100C Pin-Out				
Pin No #	**Signal Name**	**Direction**	**Default State**	**Description**
11	DIO5 / RTS0 / JTAG_TMS / PWM1 / PC1	Bidirectional	-	DIO5, UART 0 Request To Send Output, JTAG Mode Select Input, PWM1 Output or Pulse Counter 1 Input
12	DIO6 / TXD0 / JTAG_TDO / PWM2	Bidirectional	-	DIO6, UART 0 Transmit Data Output, JTAG Data Output or PWM2 Output
13	DIO7 / RXD0 / JTAG_TDI / PWM3	Bidirectional	-	DIO7, UART 0 Receive Data Input, JTAG Data Input or PWM 3 Output
14	DIO8 / TIM0CK_GT / PC1 / PWM4	Bidirectional	-	DIO8, Timer0 Clock/Gate Input, Pulse Counter1 Input or PWM 4 Output
15	DIO9 / TIM0CAP / 32KXTALIN / RXD1 / 32KIN	Bidirectional	Input	DIO9, Timer0 Capture Input, 32K External Crystal Input, UART 1 Receive Data Input or 32K External Clock Input
16	DIO10 / TIM0OUT / 32KXTALOUT	Bidirectional	Output	DIO10, Timer0 PWM Output or 32K External Crystal
17	VDD	-	3.3V	3.3V Supply Input
18	GND	-	GND	Digital Ground
19	DIO11 / PWM1 / TXD1	Bidirectional	-	DIO11, PWM1 Output or Timer1 Data Output
20	DIO12 / PWM2 / CTS0 / JTAG_TCK / ADO or SPISMOSI	Bidirectional	-	DIO12, PWM2 Output, UART0 Clear To Send Input, JTAG CLK Input, Antenna Diversity Odd Output or SPI Slave Master Out Slave In Input
21	DIO13 / PWM3 / RTS0 / JTAG_TMS / ADE or SPIMISO	Bidirectional	-	DIO13, PWM3 Output, UART0 Request To Send Output, JTAG Mode Select Input, Antenna Diversity Even output or SPI Slave Master In Slave Out Output

Table 2-1. NebuLink Node NLN 100C Pin-Out				
Pin No #	**Signal Name**	**Direction**	**Default State**	**Description**
22	RESETN	Input	-	Reset input
23	DIO14 / SIF_CLK / TXD0 TXD1 / JTAG_TDO / SPISEL1 or SPISSEL	Bidirectional	-	DIO14, Serial Interface Clock, UART 0 Transmit Data Output, UART1 Transmit Data Output, JTAG Data Output, SPI Master Select Output 1 or SPI Slave Select Input
24	DIO15 / SIF_D / RXD0 RXD1 / JTAG_TDI / SPISEL2	Bidirectional	-	DIO15, Serial Interface Data or Intelligent Periph-eral Data Out
25	DIO16 / COMP1P / SIF_CLK / SPISMOSI	Bidirectional	-	DIO16, Comparator Posi-tive Input, Serial Interface clock or SPI Slave Master Output Slave In Input
26	DIO17 / COMP1M / PWM4 / I2C DATA / SPIMOSI	Bidirectional	-	DIO17, Comparator Negative Input, Serial Interface Data or SPI Slave Master In Slave Out Output
27	ADC2/VREF	Input	-	Analogue to Digital Input

3. Package Information

Figure 3-1. shows physical dimensions of all variants of NebuLink Node NLN 100C.

Figure 3-1. NebuLink Node NLN 100C Physical Dimensions

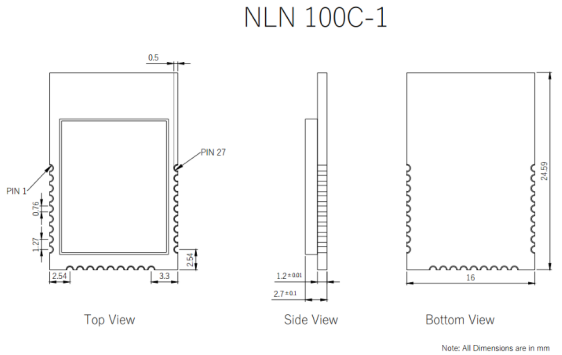

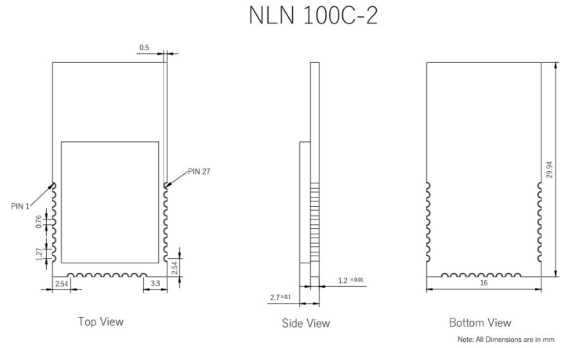

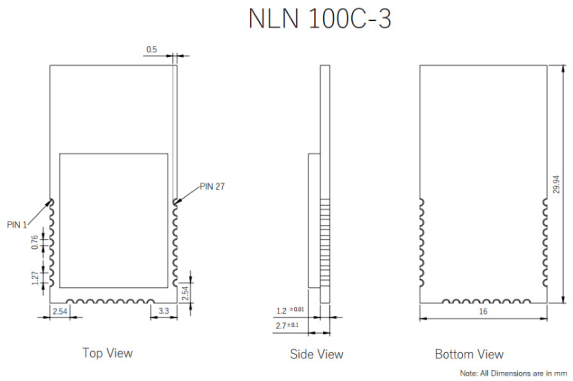
NLN 100C-3
0.5
PIN 1
PIN 27
0.76
1.27
2.54
2.54
3.3
1.2 ±0.01
2.7±0.1
29.94
16
Top View
Side View
Bottom View
Note: All Dimensions are in mm

4. Test Report

Figure 4-1. and Figure 4-2. shows the test result of NebuLink Node NLN 100C measured in a RF lab under standard conditions.

Figure 4-1. Power Consumption Test Result

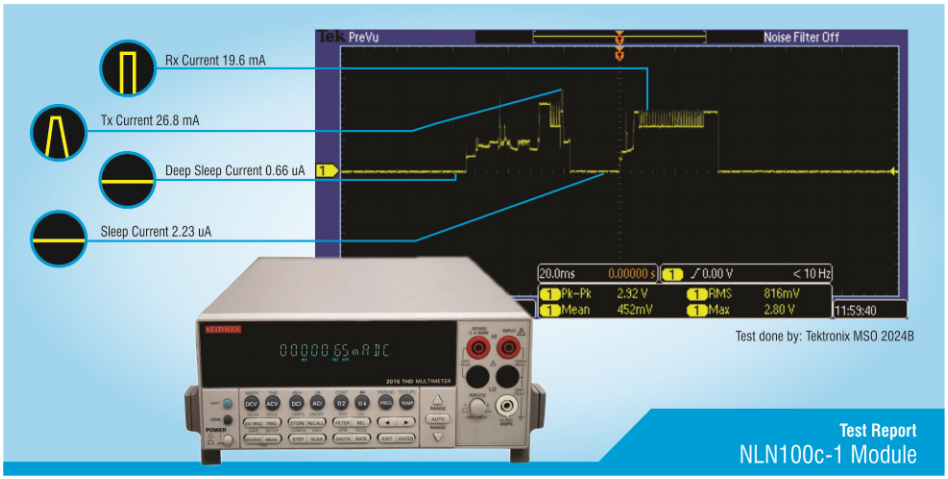

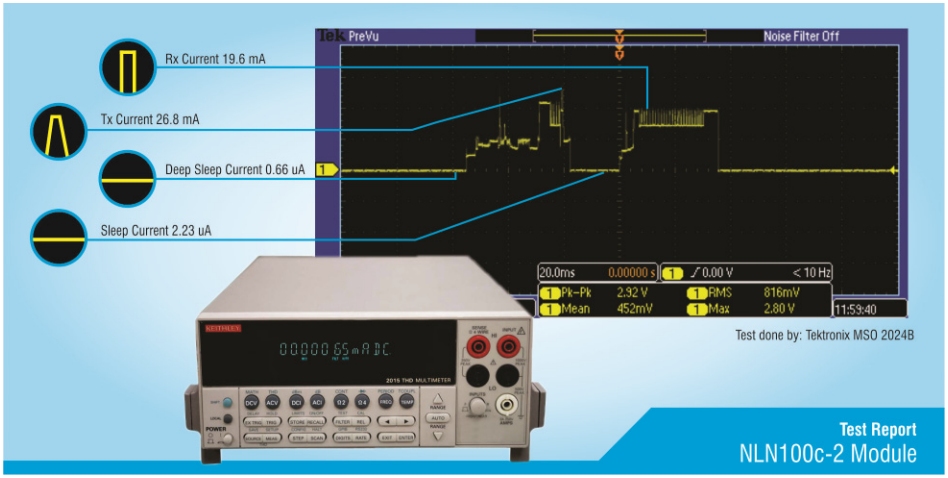

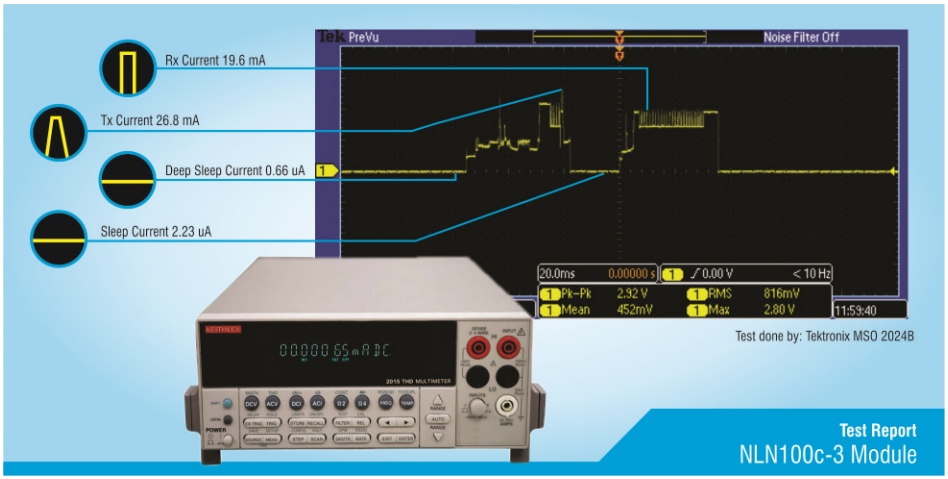

Figure 4-2. Frequency Test Report

NLN 100C-1

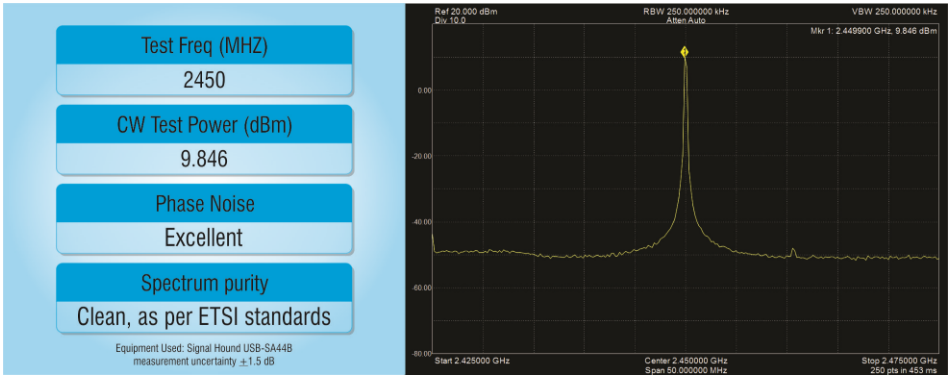

NLN 100C-2

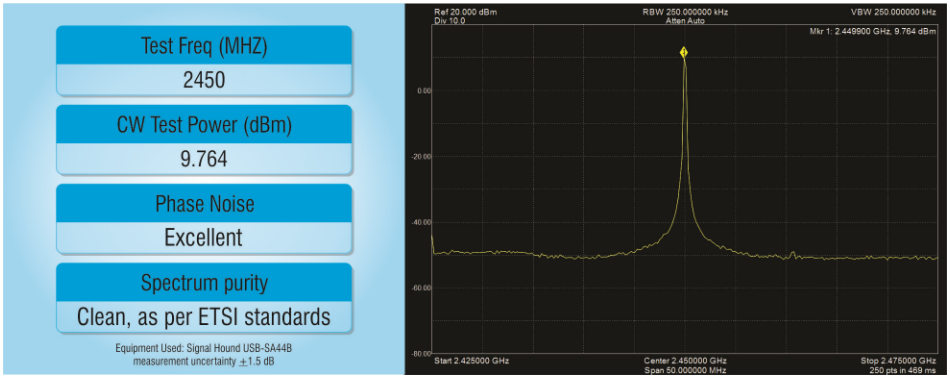

NLN 100C-3

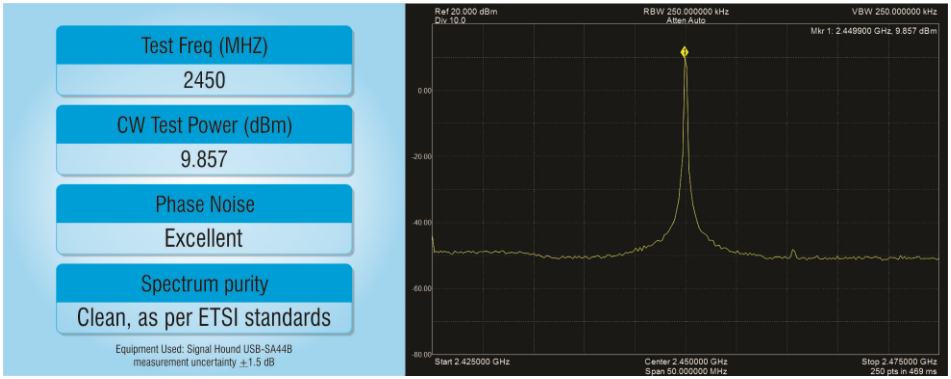

(OEM) Integrator has to assure compliance of the entire end-product incl. the integrated RF Module. For 15 B (§15.107 and if applicable §15.107) compliance, the host manufacturer is required to show compliance with 15 while the module is installed and operating.

Furthermore the module should be transmitting and the evaluation should confirm that the module's intentional emissions (15C) are compliant (fundamental / out-of-band). Finally the integrator has to apply the appropriate equipment authorization (e.g. Verification) for the new host device per definition in §15.101.

Integrator is reminded to assure that these installation instructions will not be made available to the end user of the final host device.

The final host device, into which this RF Module isintegrated" hasto be labelled with an auxilliary lable stating the FCC IDofthe RF Module, such as "Contains FCC ID:2AO93PI0NN100C1100

"This device complies with part 15 of the FCC rules. Operation is subject to the following two conditions:
(1)this devicemay not cause harmful interference, and
(2)this devicemust accept any interference received, including interference thatmay cause undesired operation."

NOTE: This equipment has been tested and found to comply with the limits for a Class B digital device, pursuant to part 15 of the FCC Rules. These limits are designed to provide reasonable protection
against harmful interference in a residential installation. This equipment generates, uses and can radiate radio frequency energy and, if not installed and used in accordance with the instructions, may cause harmful interference to radio communications. However, there is no guarantee that interference will not occur in a particular installation. If this equipment does cause harmful interference to radio or television reception, which can be determined by turning the equipment off and on, the user is encouraged to try to correct the interference by one or more of the following measures:
--Reorient or relocate the receiving antenna.
--Increase the separation between the equipment and receiver.
--Connect the equipment into an outlet on a circuit different from that to which the receiver is connected.
--Consult the dealer or an experienced radio/TV technician for help.

Changes or modifications to this unit not expressly approved by the party responsible for compliance could void the user's authority to operate the equipment.

This equipment complies with FCC RF radiation exposure limits set forth for an uncontrolled environment. This compliance to FCC radiation exposure limits for an uncontrolled environment, and minimum of 20cm separation between antenna and body.
The host product manufacturer would provide the above information to end users in their end-product manuals.
This module works at 2405MHz-2480MHz under the serial port command tool, and performs transmission and reception operations on low, medium and high channels.
Antenna: External Antenna 1.5dBi

Module statement

The single-modular transmitter is a self-contained, physically delineated, component for which compliance can be demonstrated independent of the host operating conditions, and which complies with all eight requirements of § 15.212(a)(1) as summarized below.

1) The radio elements have the radio frequency circuitry shielded.
2) The module has buffered modulation/data inputs to ensure that the device will comply with Part 15 requirements with any type of input signal.
3) The module contains power supply regulation on the module.
4) The module contains a permanently attached antenna.
5) The module demonstrates compliance in a stand-alone configuration.
6) The module is labeled with its permanently affixed FCC ID label
7) The module complies with all specific rules applicable to the transmitter, including all the conditions provided in the integration instructions by the grantee.
8) The module complies with RF exposure requirements.

This transmitter/module must not be collocated or operating in conjunction with any other antenna or transmitter.