CRAYCOM®
RFID Solutions

Fork Lift Reader

Very reliable RFID-reader for harsh environments

Craycoms products with RFID technology offer new and exciting possibilities.

Measurement in harsh environments without cables or power supply may sound impossible, but that is just what Craycom can do for you.

Craycoms unique concepts enable solutions for reading and monitoring identity, temperature, wear and vibration. Input data is displayed from a database integrated with your computer environment. In addition to handheld readers, we also have stationary readers and unique transponders (tags).

Fork Lift Reader

Very reliable RFID-reader for harsh environments

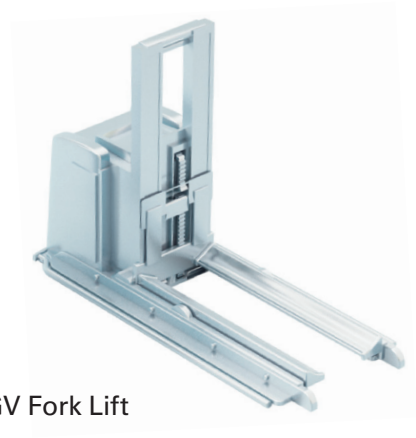

AGV Fork Lift

Technical specifications

RFID Frequency	125 kHz
Tag type	HITAG S 256
Reading range	30-60 mm
Dimensions	165 x 137 x 25 mm
Operational temp.	-35°C to +70°C
Storage temperature	-40°C to +85°C
Protection class	IP67
Power supply	12VDC (11-15VDC)
Interface	RS232 (115200 N81)

Connection cable

Red: VDD	Black: GND
Orange: RXD	Brown: TXD
Yellow: RTS	Green: GND

RFID technology

RFID, which stands for Radio Frequency Identification, enables wireless transmission of data and energy between a reader and a transponder (tag).

Our unique RFID concept makes it possible to perform measurements in harsh environments, without cables or power supply. Input data is displayed from a database integrated with a standard computer environment. The RFID tag contains a serial number which the reader picks up by activating the tag with a magnetic field. Since the electromagnetic field penetrates most materials, the tag can be encapsulated in just about anything.

RFID-based systems are therefore very robust and flexible. In addition to reading the serial number, intelligent tags can also perform different types of measurements, which are reported via the magnetic field. We offer handheld readers, stationary readers and intelligent tags.

Fork Lift Reader

Fork Lift Reader is an RFID-reader specially designed for reading tags in industrial environments. Fork Lift Reader focus on simplicity and reliability. The reader is placed under the truck enabling it to read tags embedded in the flooring. It is tuned to read a predetermined tag type. Though being so small, this reader has a very good reading range due to a powerful antenna circuit.

Fork Lift Reader has also a circuit for accurate positioning of the tag within the reader field. The electronics are of the highest quality and classed for extended operating temperature.

Fork Lift Reader communicates over isolated RS232. All electronics are moulded into a watertight solid enclosure.

FCC NOTICE TO USERS: FCC ID: 2AO97-0001

Caution: Changes or modifications not expressly approved by the Party responsible for compliance could void the user's authority to operate the equipment. Note: This equipment has been tested and found to comply with the limits for a Class B digital device, pursuant to part 15 of the FCC Rules. These limits are designed to provide reasonable protection Against harmful interference in a residential installation. This equipment generates, uses and can radiate radio frequency energy and, if not installed and used in accordance with the instructions, may cause harmful interference to radio communications, however there is no guarantee that interference will not occur in a particular installation. If this equipment does cause harmful interference to radio or television reception, which can be determined by turning the equipment off and on, the user is encouraged to try to correct the interference by one or more of the following measures:

- Reorient or relocate the receiving antenna.
- Increase the separation between the equipment and receiver.
- Connect the equipment into an outlet on a circuit different from that to which the receiver is connected.
- Consult the dealer or an experienced radio/TV technician for Help.

The device complies with part 15 of the FCC Rules. Operation is subject to the following two conditions:

(1) this device may not cause harmful interference, and

(2) this device must accept any interference received, including interference that may cause undesired operation.

©ElectroTech 2018 Rev:468A02ENG-20

ElectroTech - Technology for the future
We design products for measurement and communication
Owner of Craycom RFID products
www.electrotech.se

CRAYCOM®
RFID Solutions