Bedside intelligent interactive terminal.

KY-END-BC300W

User manual

KYEE 京颐股份

Dear users:

Thank you for choosing this product. In order to ensure your safe use and protect this product, please read the operating instructions carefully before use so as to understand the operation mode and precautions of the product. Please keep this manual for future reference.

1,Packing list.

Serial number	name	number
1	Bedside intelligent interactive terminal.	1
2	Sunk head hexagon self-tapping screw M3.0*10.	5
3	Operating instruction	1
4	The interface plate	1
5	Call the handle	1

I. component introduction.

1. Intelligent interactive terminal beside the bed.
2. Video button.
3. Emergency call button.
4. Headphone jack
5. Power button and volume add and subtract.
6. Micro USB interface, TF card slot.
7. NFC non-contact reading card area.
8. Fingerprint area
9. Call handle

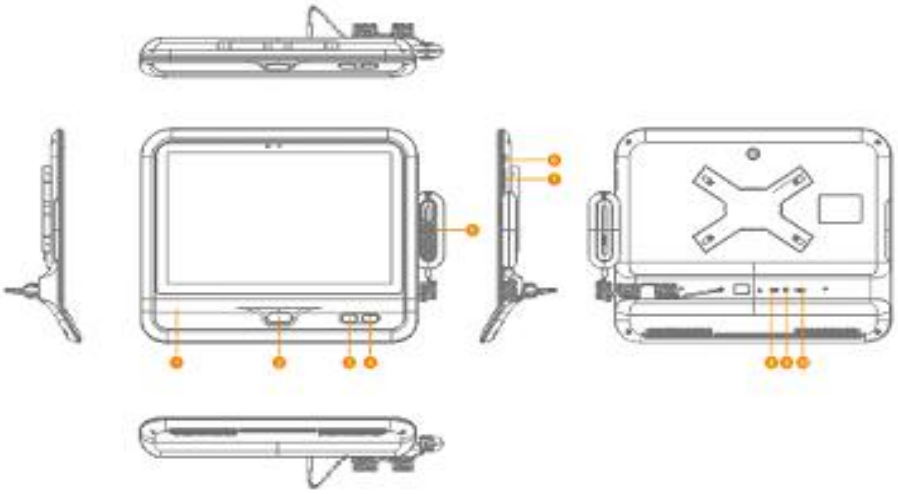

1. NFC non-contact reading card area.
2. Emergency call button.
3. Video button.
4. Fingerprint area
5. Call handle
6. The power button
7. Add and subtract the volume.
8. The Type - C interface
9. Headphone jack
10. TF card slot

1. Installation instructions.

1. After the relevant interface line is inserted, fix the interface cover plate in the box to the plate.

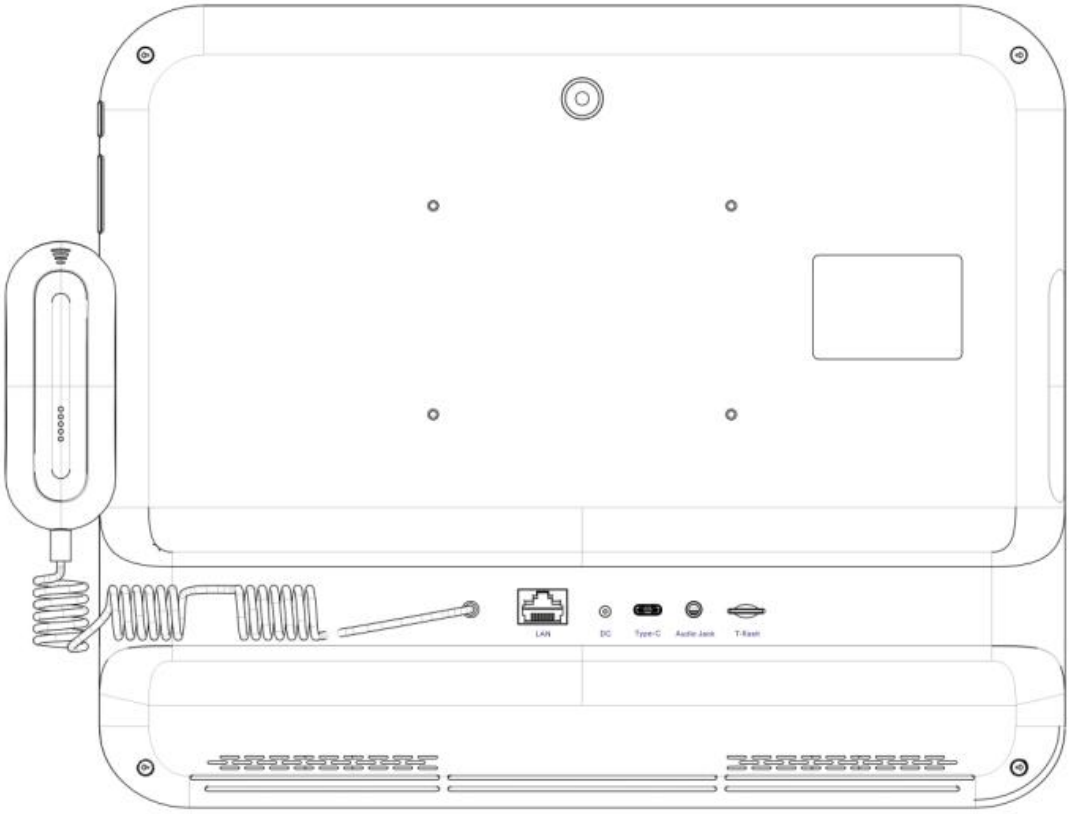

1. After the installation of the tablet computer with the rear bracket, it is held in the X slot of the side bracket of the bed, and the screw hole position on the side of the four corners is fixed, and the flat plate is fixed on the bracket with four internal hexagon M3*10 self-tapping
screws.

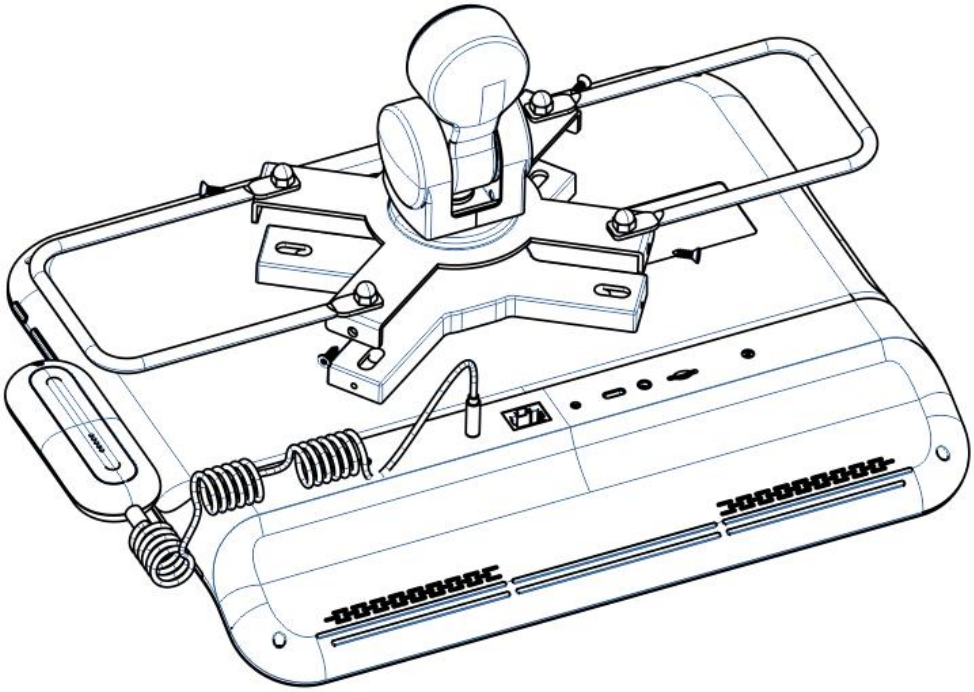

1. Indoor installation of equipment.
2. Install the flat plate and bracket and insert the top into the mechanical arm as shown below.

1. Desktop introduction.

1. Main interface introduction.

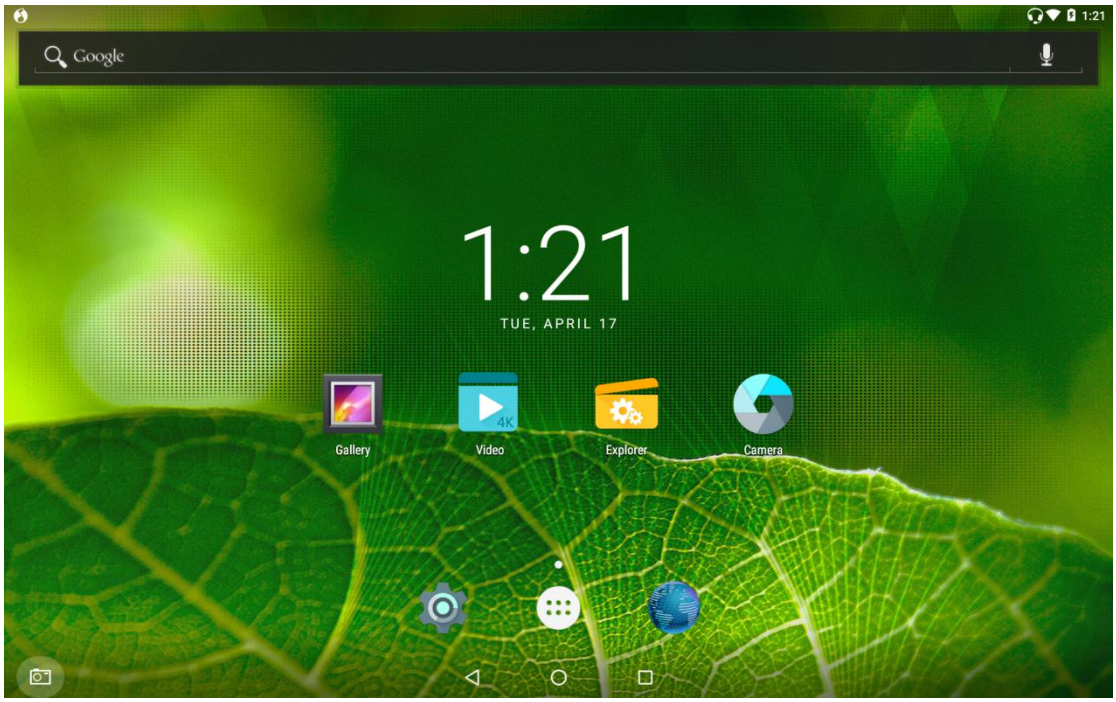

If you add the APP shortcut to the second page, swipe left and right to switch to different desktop menus.

Click open the app lication drawer.

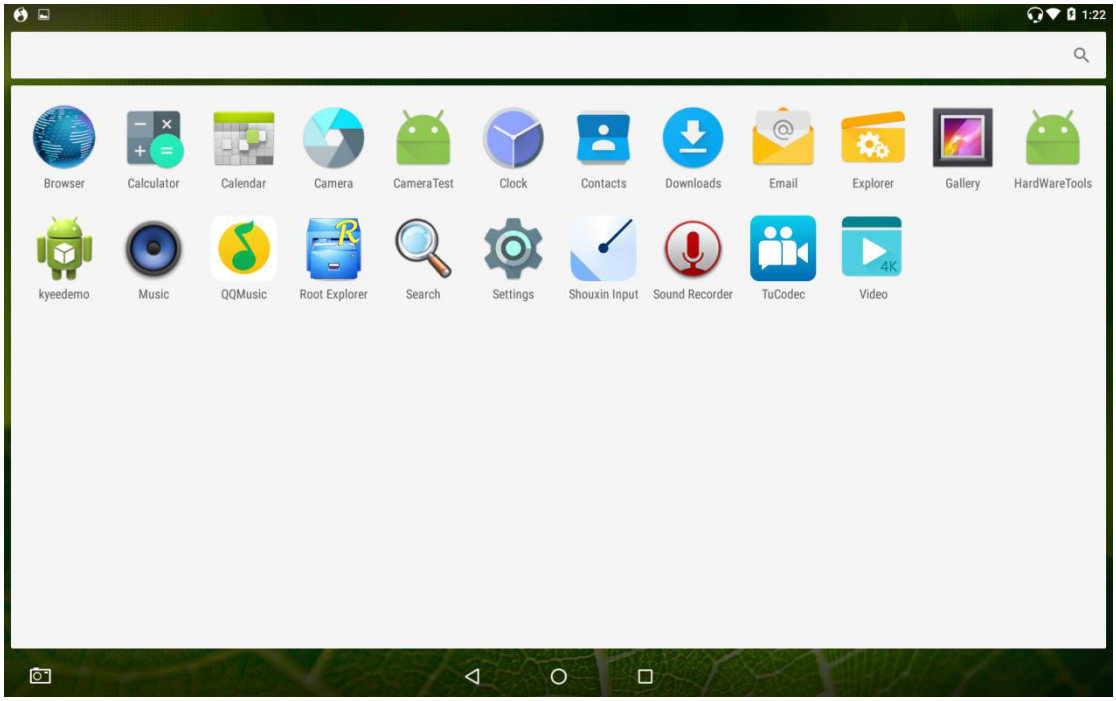

Click the application icon to start the application, and hold down the application icon to add a desktop shortcut.

1. Navigation bar icon.

Return icon

Click the icon to return to the desktop.

Click the icon to open the recently viewed task interface.

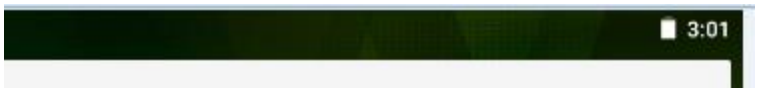

Hold down the slide at the top of the interface can display the notification menu, display the current time date, power in detail, can quickly adjust the screen brightness, open or close wifi and bluetooth, you are the one, flight mode, the screen rotation, torch, location information, the projection

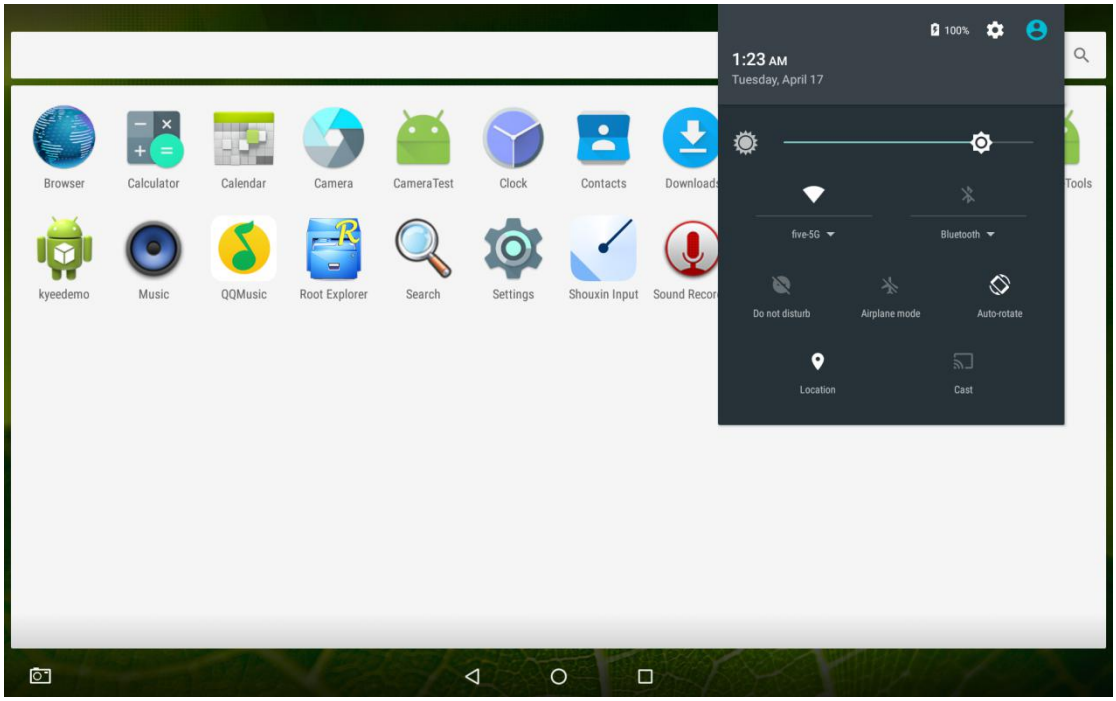

3. Start/restart.

After the power button is switched on, the power button will be pressed for about 3 seconds, and the restart option will be displayed. Click ok, and the tablet will enter the restart state. If so, click on other areas of the screen to exit the restart prompt interface.

Turn off state, insert adapter, machine boot.

Please wait patiently for the first time after the firmware upgrade or restore the factory setting. The more programs you install, the longer the boot time will be.

4. PC USB connection

In the startup state, after connecting with the PC with the type-c data line, the sliding message notification

column:

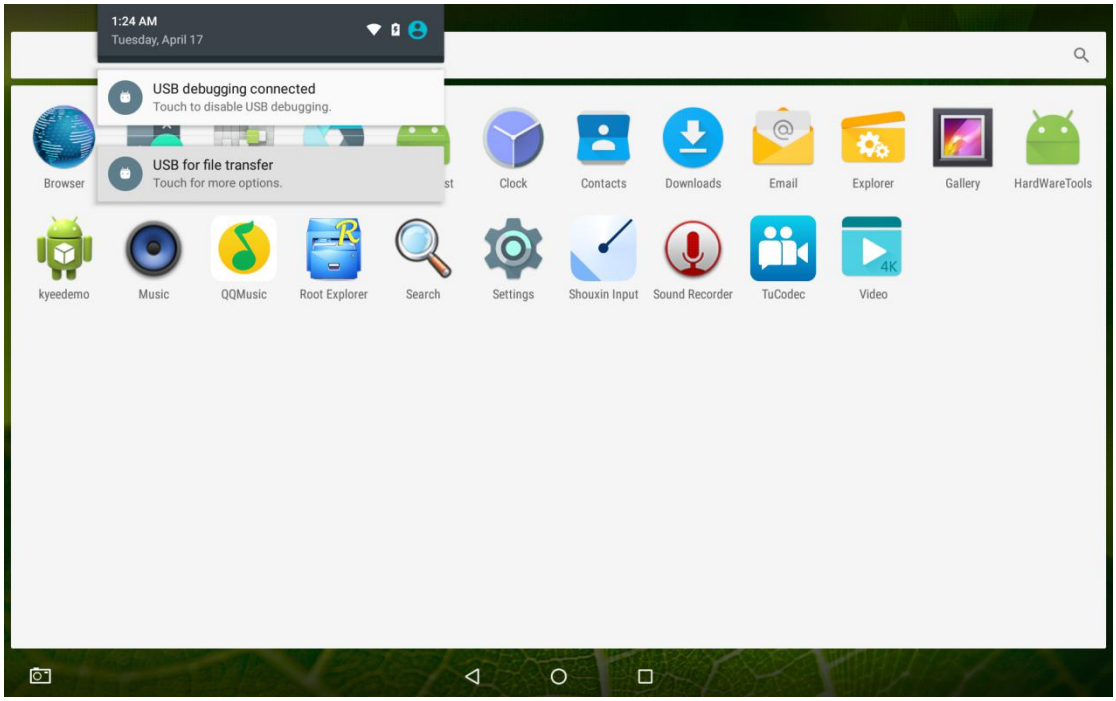

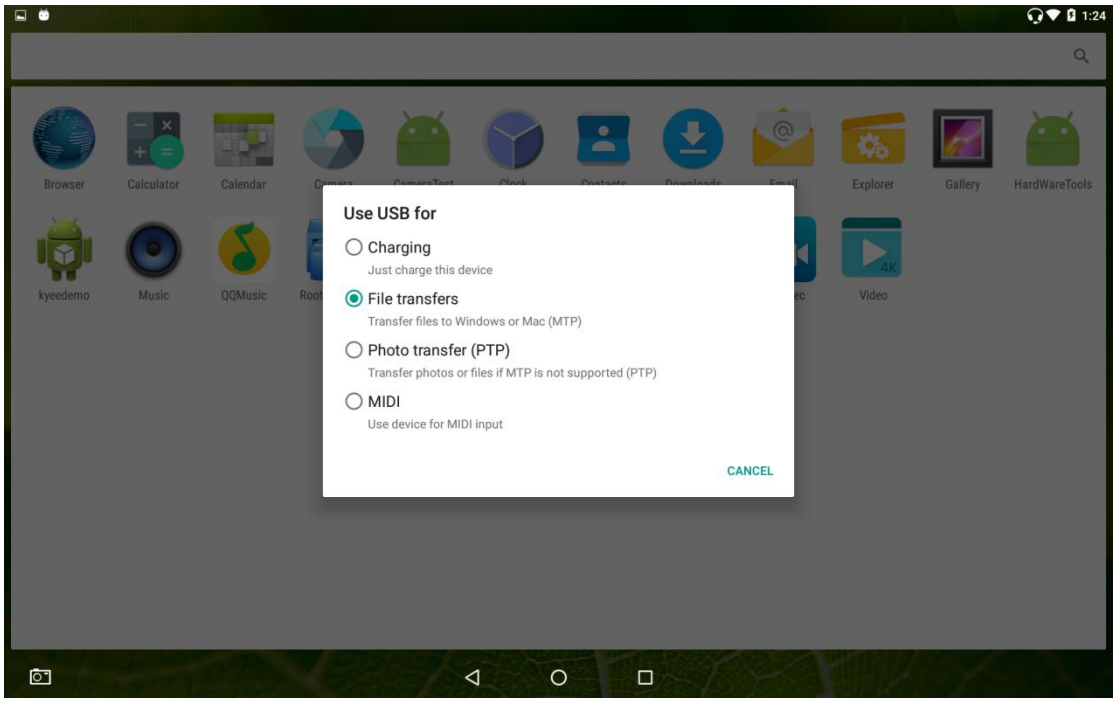

Click "on USB charging" to pop up "USB drive" to select different modes.
Select "transfer file (MTP)" to access the tablet PC via PC, file copy and delete.

5. Resource manager.

If you want to copy, paste, move or delete a file or multiple files, access all application interface, click on the "explorer", find the need to manipulate the file, and then click the multiple-choice, click need operation file, the file name is yellow, and then click edit can appear operational options, as follows:

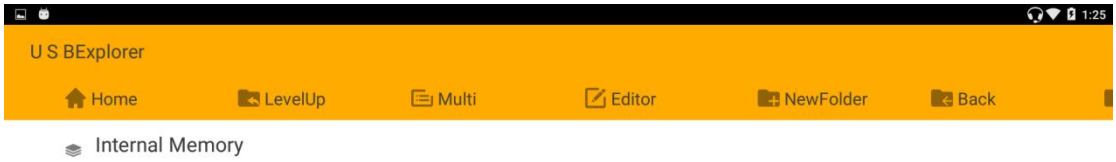

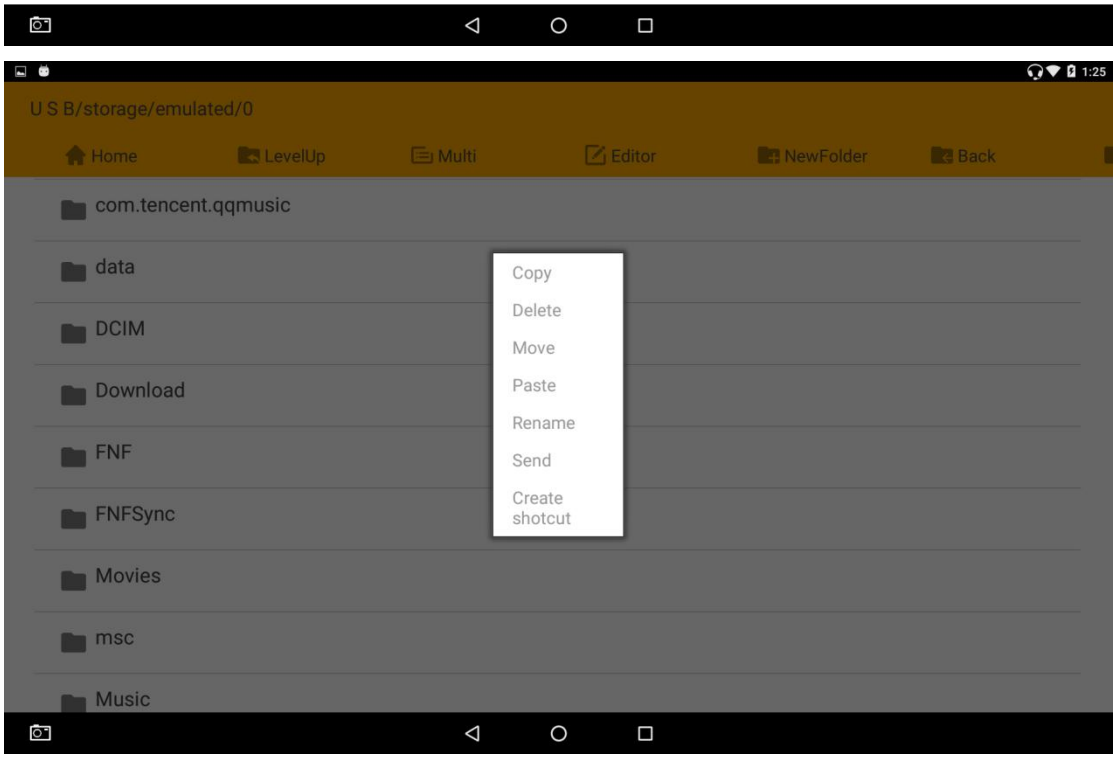

6. Recent task window.

Click the icon on the navigation bar. , The most recently used application task window.

Click on the top right corner of the task window that needs to end. Or press the task window to the right, the window disappears, and the task ends. The diagram below:

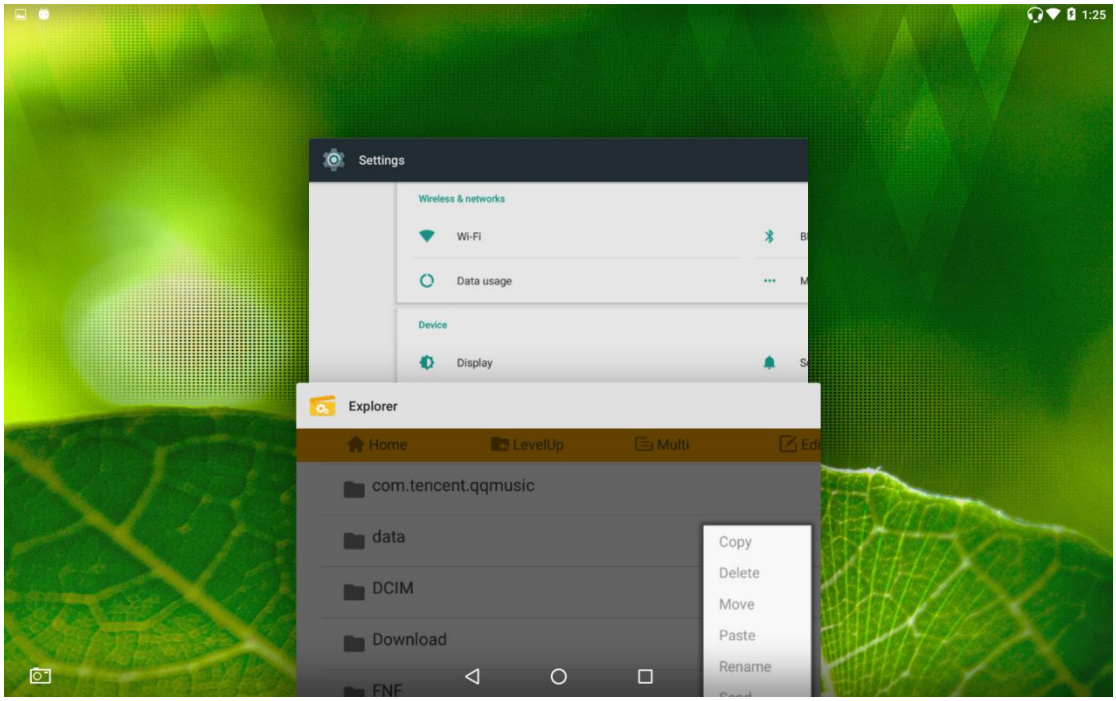

7. System setting

If you want to change the language, connect wifi, open bluetooth, switch input method, set date time, etc., you can click "Settings" in the application interface to enter the setting interface for operation:

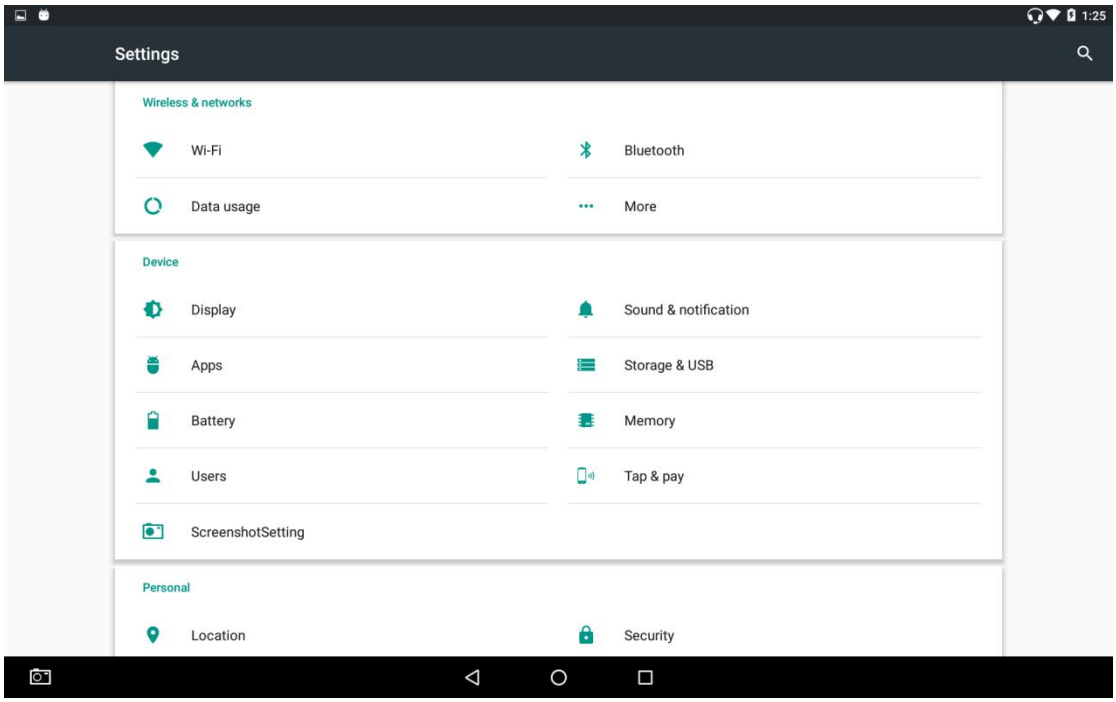

I. matters needing attention.
Please do not place the product in high temperature, humidity or dust.
The machine is suitable for the 5V 3A power adaptor.
Avoid falling or slamming into the product.
Please do not place the product near the heat source device.
Please do not disassemble the product by yourself.
To ensure safety, please do not open the shell to expose the machine. If maintenance is required, be sure to ask for professional assistance.
The waterproof grade of the machine is IP54.
The pictures listed in this manual are for reference only.

User stub

Product information	Product model	
	The serial number	
The agent information	dealers	
	Contact phone number	
	Sales date	
The user information	The user name	
	Correspondence address	
	Contact phone number	
	email	

Product warranty certificate

1、 Thank you very much for choosing the smart interactive terminal of Beijing yiyi bed. Your choice will be our driving force and support! For a long time, under the principles of customer first, constantly improve our products all details, try to improve performance and technology and establish humanized after-sales service system, always put the user needs as the starting point of all work. We in product design, development, manufacturing, testing, acceptance and sales service and so on each link all strive to win by details, in order to allow you to gain the most from our products perfect experience!

2、 Buy the smart interactive terminal of Beijing yiyi bed according to the state regulations to enjoy the warranty service.

3、 Principle of the warranty

4、 1. If the normal operation is applicable, there will be a failure without self-repair. Within seven days from the date of purchase, it will be returned within 15 days.

5、 2. One of the following situations shall not carry out the warranty, but the maintenance shall be carried out in charge;

6、 The damage caused by human factors, including the use in the abnormal working environment, and the damage caused by the failure to use the instruction manual;

7、 (1) the user will disassemble the machine, repair, modify or repair it by non-company trustee;

8、 Damage caused by force majeure (such as flood, fire, earthquake, lightning, etc.);

9、 No product warranty card and valid purchase voucher;

10、 The product warranty card and purchase certificate are inconsistent with the product model, bar code or altered.

11、 The warranty method

12、 1. If there is any loss, please contact the sales department of our company.

13、 2. You can contact the sales department of our company to replace the goods. If the host fails, we will replace the same model and the same model for free. If the accessories fail, the accessories will be replaced free of charge.

14、 3. For the products that need to be repaired, you can contact our customer service department to repair or send it to the company's customer service department for maintenance;

15、 4. We have the right to reject the after-sales service without the confirmation of the product quality problem by our customer service department and directly send back to our company for replacement or warranty.

WiFi 5G indoor use only

Operations in the 5.15-5.25GHz band are restricted to indoor usage only.

FCC STATEMENT :

This device complies with Part 15 of the FCC Rules. Operation is subject to the following two conditions:
(1) This device may not cause harmful interference, and
(2) This device must accept any interference received, including interference that may cause undesired operation.
Warning: Changes or modifications not expressly approved by the party responsible for compliance could void the user's authority to operate the equipment.

NOTE: This equipment has been tested and found to comply with the limits for a Class B digital device, pursuant to Part 15 of the FCC Rules. These limits are designed to provide reasonable protection against harmful interference in a residential installation. This equipment generates uses and can radiate radio frequency energy and, if not installed and used in accordance with the instructions, may cause harmful interference to radio communications. However, there is no guarantee that interference will not occur in a particular installation. If this equipment does cause harmful interference to radio or television reception, which can be determined by turning the equipment off and on, the user is encouraged to try to correct the interference by one or more of the following measures:

Reorient or relocate the receiving antenna.

Increase the separation between the equipment and receiver.

Connect the equipment into an outlet on a circuit different from that to which the receiver is connected.

Consult the dealer or an experienced radio/TV technician for help.

FCC Radiation Exposure Statement:

This equipment complies with FCC radiation exposure limits set forth for an uncontrolled environment. This equipment should be installed and operated with minimum distance 20cm between the radiator & your body.