OUTFORM™

iDISPLAY 8″ 10.1″ 13.3″ Display

User Manual

© OUTFORM All Rights Reserved

Table of Contents

About This Guide 2

Introducing the iDISPLAY 8", 10.1", and 13.3" 2

Important Notices 3

Copyright Information 3

Safety and Warning Information 4

Package Contents 5

Quick Start User Guide 9

Setting up the Tablet Hardware 9

Playing Videos and Displaying Images 9

Supported File Formats 10

Accessing the Pulse Player Settings 10

Pulse Player Settings 11

Using the Android Operating System 15

Configuring the Android Operating System Settings 16

Using Pulse Management 17

Troubleshooting 18

About This Guide

Thank you for purchasing an Outform product. We recommend reading this user guide in its entirety in order to maximize the performance and service life of this product. This product is intended for commercial use and should be installed by authorized personnel only.

Introducing the iDISPLAY 8", 10.1", and 13.3"

The iDISPLAY 8", 10.1", and 13.3" are interactive digital displays designed to be used in commercial environments, and includes the following features:

- Quad core processor
- 1280 x 800 Resolution (8")
- 1280 x 800 Resolution (10.1")
- 1920 x 1080 full HD resolution (13.3")
- Android 4.4 operating system (Optional Android 5.1)
- 5-point touch capacitive screen (8")
- 10-point touch capacitive screen (10.1" and 13.3")
- 802.11b/g/n WiFi
- Bluetooth
- VESA wall mounting
- 10M/100M RJ45 Ethernet port with Power over Ethernet for 8" and 10.1"
- USB ports
- 2 speakers
- Headphone jack
- HDMI port

If required, please ask for detailed specifications.

Important Notices

Copyright Information

Copyright © 2016 Outform. All rights reserved.

All intellectual property rights in this publication are owned by Outform and protected by applicable copyright laws and international treaty provisions. Outform retains all rights not expressly granted. No part of this publication may be reproduced in any form whatsoever or used to make any derivative work without prior written approval by Outform.

Outform reserves the right to revise this publication, and/or make improvements or changes in the product(s) and/or the program(s) described in this documentation at any time without prior notice. The information in this document is provided in good faith, but without any representation or warranty whatsoever, whether it is accurate, or complete or otherwise, and on express understanding that Outform shall have no liability whatsoever to other parties in any way arising from or relating to the information or its use.

All other trademarks are the property of their respective owners. Other company and brand products and service names are trademarks or registered trademarks of their respective holders.

This device complies with CE and FCC regulations.

Safety and Warning Information

NOTE

This mark is applied to indicate that the equipment conforms to European safety and electro-magnetic compatibility standards.

WARNING!

Main Supply: This equipment is designed to operate from a 100-240 Volt, 50/60Hz AC power supply. The use of other power sources may damage this equipment. Check that the voltage marked on the rating plate located at the rear of the power adaptor states 100-240V. The manufacturer will NOT accept responsibility or damage or injury caused by connecting to the wrong voltage.

WARNING!

Main Adaptor: The supplied power adaptor is compatible with a standard main socket. If the power adaptor or lead gets damaged, it must be replaced by a qualified service agent with an approved adaptor of the same type and rating.

WARNING!

Dangerous voltage constituting a risk of electric shock is present inside this equipment.

WARNINGS!

The main plug shall be the main disconnect device and shall remain operable at all times.

Do not push objects into holes and ventilation slots.

Do not expose this product to moisture or place any objects filled with liquids on or near the product.

Do not place a naked flame source, such as lighted candles, on or near this product.

Do not store or operate the device in environments where the temperature is above 50 degrees celsius or below -10 degrees celsius.

Do not intentionally hit the device or place heavy or sharp objects on the device.

Only use accessories specified by the manufacturer.

Keep the device away from benzene, diluents, and other chemicals.

Do not attempt to repair this product yourself. Always use a qualified service agent to perform adjustments or repairs.

Package Contents

The package contains the following items:

Display Tablet
(8" Shown)

Power Adapter
(US, UK, or EU)

8” Display Exterior Components

Bottom View

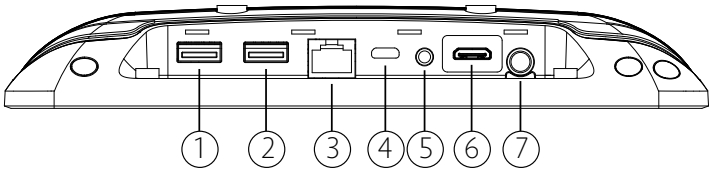

Rear View

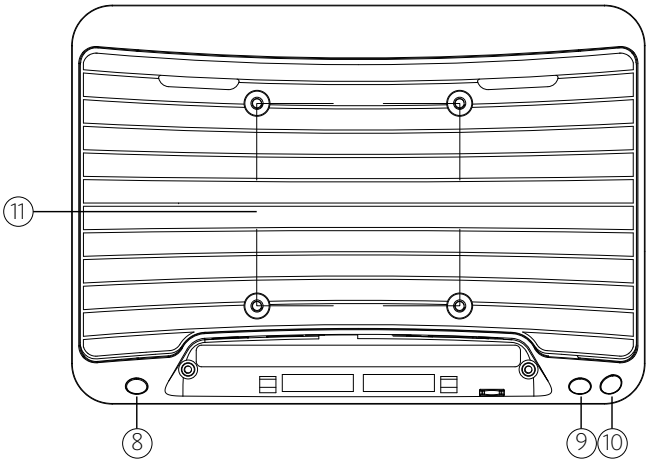

No.	Description
1	USB 2.0 Host Port 1
2	USB 2.0 Host Port 2
3	RJ45 Ethernet jack with Power over Ethernet
4	micro USB OTG Port
5	3.5mm audio jack
6	mini HDMI Port
7	DC in Power Supply Port
8	Power/Back button (5 sec. press for power)
9	Volume control +
10	Volume control -
11	VESA 75mm x 75mm mounting bracket screw holes

10.1" Display Exterior Components

Bottom View

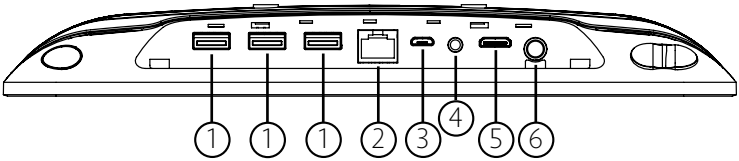

Rear View

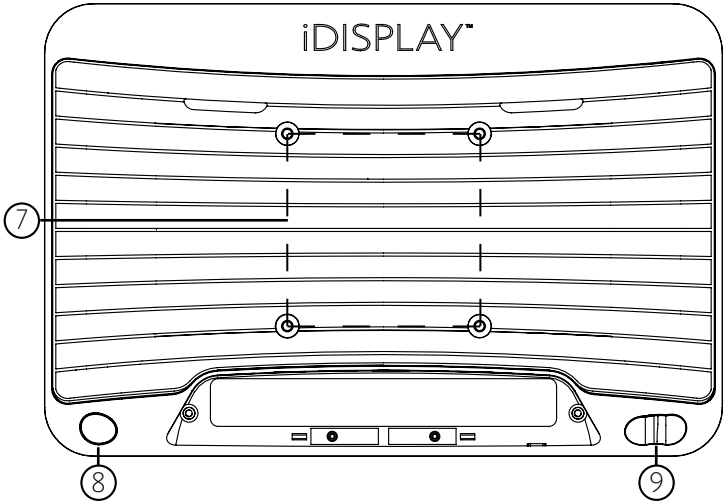

No.	Description
1	USB 2.0 Host Port
2	RJ45 Ethernet jack with Power over Ethernet
3	micro USB OTG Port
4	3.5mm audio jack
5	mini HDMI Port
6	DC in Power Supply Port
7	VESA 75mm x 75mm mounting bracket screw holes
8	Power/Back button (5 sec. press for power)
9	Volume control

13.3″ Display Exterior Components

Bottom View

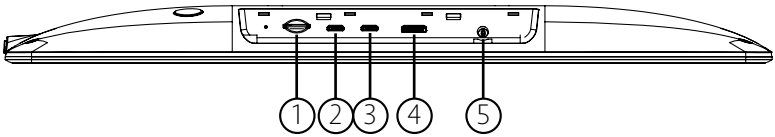

Rear View

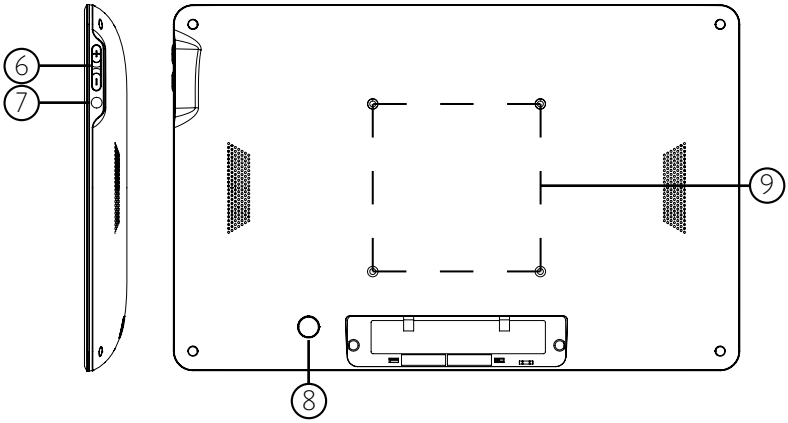

No.	Description
1	micro SD card slot
2	USB Host port
3	USB OTG port
4	HDMI port
5	DC in power supply port
6	Volume control
7	3.5mm audio jack
8	Power/Back button (5 sec. press for power)
9	VESA 100mm x 100mm mounting bracket screw holes

Quick Start User Guide

This section describes how to set up and use the iDISPLAY tablet for the first time. The tablet runs OUTFORM's Pulse Player software by default, which runs on an Android operating system installed in the player to play the desired content.

Setting up the Tablet Hardware

Connect the following components to the back side ports of the iDISPLAY tablet:

- The power adapter, plugged in to a nearby plug outlet.
- Alternately, power may be supplied through the RJ45 outlet by plugging in an RJ45 cable connected to a POE capable source. (8" and 10.1" tablets only)

The tablet automatically powers on and initiates the Pulse Player software, which in most cases plays a sample video by default.

For detail information of installation instructions please refer to the seperate sheet "i DISPLAY Retail Tablet Wall Bracket Product Specification &Assembly Instructions" 20 cm separated distance for setting up the tablet hardware

Playing Videos and Displaying Images

Copy video and image files to the tablet using a USB thumb drive as follows:

1. Insert an empty USB drive into a computer and create a folder titled "0" (the number zero) at the topmost (root) directory of the drive. Ensure that no other content is on the drive.
2. Copy the desired video and image files to be played into the "0" folder.
3. Eject the drive from the computer and insert it into a USB port on the back side of the tablet.
4. A password prompt appears on the display. Enter the configured password using the on-screen keyboard. By default this password is "11223344" without the quotation marks, and can be modified later.
5. Upon successful entry of the password, select one of the two options that display, either to delete and replace the existing content on the tablet or to simply add additional content.

   NOTE: If you choose to keep the existing content, the new content from the USB drive is copied alongside the existing content, and no files are deleted. However, if a file on the drive has the same name as a file already on the tablet, the file on the tablet will be overwritten.

6. After a message displays indicating that the content has been copied, the USB drive can be removed. The new content plays automatically.

NOTE: When auto-copying files from a Linux or MAC OS-based computer, hidden metadata files, preceded by a period ".", may also get copied into the "0" folder on the USB drive. When Pulse Player attempts to play or display these files, a black screen is shown momentarily. Use the Explorer app mentioned in the Android Operating System

Settings section below to manually delete these metadata files from the “0” folder on the device.

Supported File Formats

The tablet supports the following file formats:

- Standard Android applications (APK files) supported by Android 4.0 and more recent versions
- Video formats: 3gp / mp4 / avi / mkv / flv / mov / rm / rmvb
- Image formats: jpg / jpeg / png / bmp

Accessing the Pulse Player Settings

When content is being played on the display, use a finger to draw a Z shape on the screen. Start at the top left of the screen and move in the direction shown below.

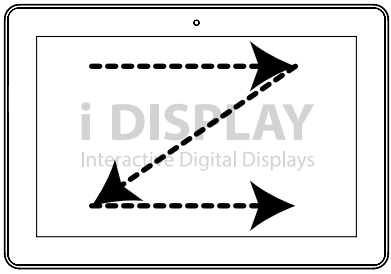

Then enter the configured or default password (“11223344” without the quotation marks) when prompted to open the Pulse Player settings interface.

Modify the “Change Password” Pulse Player software setting to configure the password for this function.

Pulse Player Settings

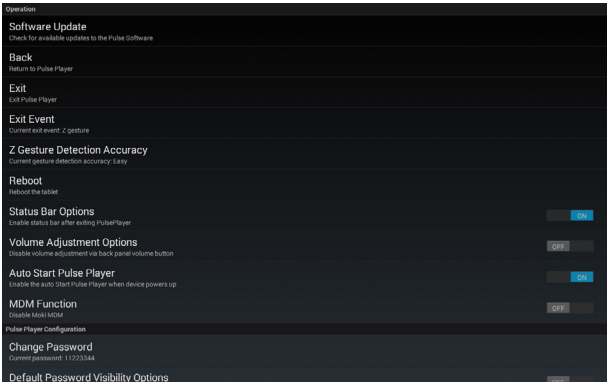

The following table describes the Pulse Player settings. For more information on how to use the underlying Android operating system, refer to the following section.

Setting	Description
Software Update	Check for available Pulse Player software updates. This requires an Internet connection.
Back	Return to playing the configured content.
Exit	Exit Pulse Player and open the home screen of the base Android operating system.
Exit Event	Configure how the user stops content playback to open the Pulse Player settings interface. Settings include the following: • Z gesture: Draw a large Z shape on the screen by sliding a finger across the screen, starting at the top left of the screen. • Tapping the screen 5 times: Tap anywhere on the screen 5 times. • Z gesture and tapping the screen 5 times: Either draw a Z shape or tap 5 times as described above.
Z Gesture Detection Accuracy	Choose “Easy”, “Medium, or “Hard” to configure how accurately the user must draw the Z shape to perform the Exit Event. “Easy” indicates a low level of drawing accuracy, “Medium” a fair amount of accuracy, and “Hard” a stricter level of accuracy, all with regards to how straight the lines of the Z shape are drawn and whether the drawing is oriented correctly.

Setting	Description
Reboot	Reboot the tablet.
Status Bar Option	Show and hide the Android operating system quick launch status and tool bar that appears at the bottom of the screen after exiting Pulse Player. “ON” shows the status bar, while “OFF” hides it.
Volume Adjustment Option	Enable and disable volume adjustment buttons on the exterior of the Pulse Player device. “ON” means the buttons are enabled, while “OFF” indicates that the buttons are disabled. Note that this option only works for iDISPLAY tablets, and does not affect the use of the media player set-top box.
Auto Start Pulse Player	Enable and disable running Pulse Player automatically when the device powers on. “ON” indicates to automatically run Pulse Player, whereas “OFF” does not, instead configuring the device to load the Android operating system home page when the system powers on.
MDM Function	Enable and disable the Pulse Management software to remote control iDISPLAY devices.
Change Password	Select this setting to modify the configured password used to perform administrative tasks related to Pulse Player.
Default Password Visibility Option	Show (“ON”) or hide (“OFF”) the configured default password in the password entry field.
Password Validation Feature Option	Enable (“ON”) or disable (“OFF”) option to password restrict administrative tasks related to Pulse Player.
Image Interval Time	Adjust the length of time (in seconds) an image or picture is displayed before displaying the next image or video. The configured time value can be within the range of 2 – 600 seconds.
Video Ratio Option	“ON” indicates keeping the original video and image size ratio when being played or displayed, whereas “OFF” indicates resizing content to fit the screen.
Player Orientation Option	“ON” enables automatic screen orientation recognition based on how the device is positioned, enabling the portrait display orientation. “OFF” keeps the screen oriented in the default landscape display orientation. Note that this option only works for iDISPLAY tablets, and does not affect the use of the media player set-top box.

Setting	Description
Log Option	"ON" enables recording Pulse Player log messages to a log file stored in the internal device memory. If this setting is enabled, the log file "PulsePlayer_Log.txt" is created and stored in the top-most directory of the device's internal memory, which can be accessed through the "Explorer" Android operating system app.
Forward To Option	Enable ("ON") and disable ("OFF") a "forward event" initiation, such as opening a configured webpage (caused by the user tapping the screen when content is playing). When enabled, specific settings related to the event display immediately below this setting.
Forward Target(TP Folder/URL)	Shown when the "Forward To Options" setting is enabled. Options include either specifying a URL to which the user is forwarded, opening the Pulse Player web browser, which also enables the "Set URL" setting (see this setting's description below), or "TP Folder", which causes an event configured by content, such as a web page file, stored in the "tp" folder to be opened or played. TP folder content must be loaded into the device's top-level internal memory directory for the "TP Folder" forward target setting to work.
Set URL	Shown when the "Forward To Options" setting is enabled and configurable when the "Forward Target(TP Folder/URL)" setting is set to "URL". Select this setting to specify a forward event URL. Do not include "http://" at the beginning of the URL.
Inactivity Time-out	The length of time (in seconds) it takes for a password input field or forward event webpage to time-out. The value specified must be a value between 15 and 600 seconds. In the case of a password input field, once the inactivity time is reached, the field disappears and the content continues playing. In the case of a URL forward event, this amount of time specifies when a warning dialog pops up prompting the user to stay on the page or return to the initially playing content.
Warning Dialog Expire Time	The length of time (in seconds) from which the forward event webpage inactivity time-out warning dialog appears until Pulse Player returns to playing the initially configured video or image content. The value specified must be a value between 3 and 600 seconds.

Setting	Description
Hardware Acceleration Option	Enable (“ON”) or disable (“OFF”) hardware acceleration for better video playback performance, if needed.
Progress Box Option	Display (“ON”) or hide (“OFF”) an animated loading progress icon when loading a forward event URL.
Cache Clear Option	When enabled the forward to browser Cache and cookies are cleared on exit from the Pulse Player. When disabled the Web browser cache and cookies are kept.
Reboot Scheduler	Configure a daily reboot time to ensure Pulse Player and the underlying Android operating system memory is regularly cleared and refreshed so as to maintain good playback performance for extended periods of time. OUTFORM recommends scheduling a daily reboot time when no customers are expected to use the device.
Reboot On Error	Turn this setting on to automatically reboot the device if Pulse Player detects an error.

Using the Android Operating System

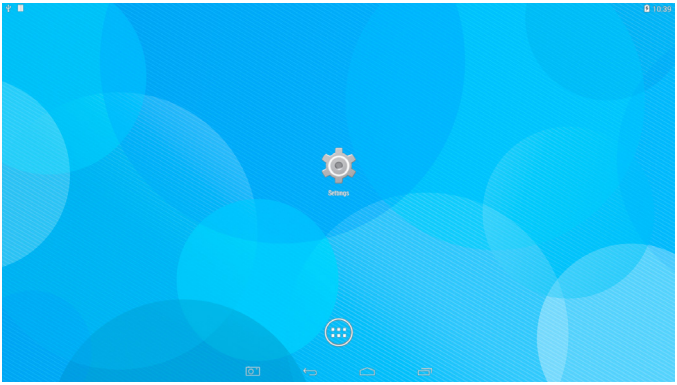

This section describes parts of the underlying Android operating system that are relevant to using Pulse Player on OUTFORM devices. More important interface elements are described below:

Applications Menu
On the bottom or side of the Android home screen, which by default has a light blue background with scattered lighter colored circles, the applications menu can be accessed by tapping on the white circular icon with six white smaller squares. The applications menu contains commonly used Android applications and tools.

The following three applications most relevant to using your iDISPLAY device are described below:

PulsePlayer
Opens and runs the Pulse Player software to play interactive content.

Explorer
A file and folder system management application. Use Explorer to manually manage files to be played by Pulse Player (located in the "0" and "TP" folders, if present), as well as to access other system-specific files such as the Pulse Player log file.

Settings
Configure the Android operating system settings, such as to turn on and connect to a wireless network. The following section describes these settings more in-depth.

Configuring the Android Operating System Settings

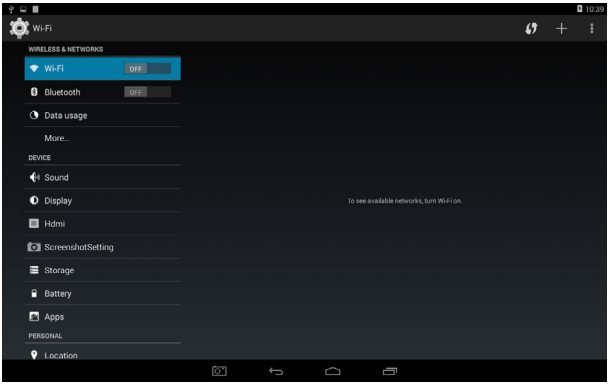

Tap on the "Settings" icon to configure the following three relevant Android system settings:

Connecting to a Wireless Network
The preselected item on the left hand settings menu is "Wi-Fi". To enable wireless connections, drag the "Wi-Fi" menu item slider to the right to display "ON". After a few seconds available wireless networks appear on the right side of the screen. Select a network to configure and connect to it.

Connecting to a Wired Network
A wired connection may be made using a USB to Ethernet adapter. Select "More..." on the Android settings left hand menu. On the menu to the right, select "Ethernet" and ensure "Use Ethernet" is checked. Immediately below the "Use Ethernet" option, open "Static IP Settings" to configure your network's wired connection settings.

Enable USB Debugging
This setting allows developers to debug their applications. Select "Developer options" on the left hand menu and then ensure "USB debugging" on the right is checked. Under the "Device" section on the left side menu, "USB" and then "Connect to PC" also needs to be enabled.

Using Pulse Management

Pulse Management is an additional subscription-based feature that can be used to remotely control iDISPLAY devices. When connecting to the Internet, the Pulse Management app automatically connects to the service's servers, as is indicated by the "Registering Device" message that briefly appears. If connecting to the Internet for the first time, a prompt appears requesting device administrator activation. As Pulse Management is intended to run in the background regardless of whether your organization has registered for a Pulse Management account, select "Activate".

Note that the Pulse Management app icon is present in the Android app menu, but serves no function other than to indicate that the app has been installed. Tapping on the app icon simply runs the software in the background without displaying any visual messages or confirmations.

The service can be enabled and disabled by adjusting the "MDM Function" setting in the Pulse Player settings menu.

Contact OUTFORM for help in setting up the Pulse Management service.

Troubleshooting

The following section lists common questions and troubleshooting scenarios.

When the Pulse Player forward to URL option is enabled, why does the configured website not appear when I tap the screen?
Two possible reasons are explained below:

- The device is not connected to the Internet. Refer to "Configuring the Android Operating System Settings" above.
- Ensure the configured URL is correct in the Pulse Player settings. Also, do not include "http://" at the beginning of the URL.

When I insert a USB drive into my iDISPLAY device, the system does not automatically prompt me to load my content onto the device.
Check the following:

- Ensure Pulse Player is running.
- Unplug and reinsert the USB drive to ensure the drive is connected properly.
- Ensure content to be played on the device is stored in a folder named "0" (the number zero), and that this folder is located at the top-most (root) directory of the USB drive.
- Use your computer to check if the USB drive contains an error. View your computer's operating system documentation to troubleshoot any problems related to the USB drive.
- The USB drive was inserted into the "USB OTG (On-The-Go)" port of the iDISPLAY device with the Android system "Developer options" setting "USB debugging" enabled. The "USB OTG" port can also be used for developer debugging purposes. If the "USB debugging" setting is enabled, only the "USB" port can be used to load content onto the device. To use the "USB OTG" port, disable "USB debugging".

What is the default Pulse Player password?
The default password is "11223344" without the quotation marks.

Why does my device reboot multiple times when I auto-copy data from my USB drive?
This happens when an unsupported/corrupt file is copied to the device. Pulse Player has a built-in auto recovery program that reboots the device a minimum of 5 times to protect the software configuration. After rebooting a number of times, a prompt appears requesting to delete the currently loaded content. Select "Yes" and enter your password. The content stored in the "0" folder on the device is deleted. Double-check the files on your computer to fix any problems related to the files, recopy the desired content to the USB drive from your computer, and then perform the auto-copy procedure a second time.

OUTFORM™

For additional assistance, visit outformsupport.com.

© OUTFORM All Rights Reserved