Wireless Charger

Model: HDD26

Thanks for purchasing this product. In order to get the most out of your product. please read the user manual carefully before using. We hoping you will have a wonderful experience by using this product.

CAUTIONS

- Please ensure you have the correct charger for your device.
- Do not attempt to open the charger.
- Do not allow water to infiltrate the charger.
- If water infiltrates the charger do not use.
- To ensure complete safety and best performance, please follow these instructions.

SPECIFICATION

Model	HDD26
Input	5V⎓2A / 9V⎓1.67A
Output	5V⎓1A / 9V⎓1.2A
Weight	64g
Size	97.5 x 97.5 x 11 mm

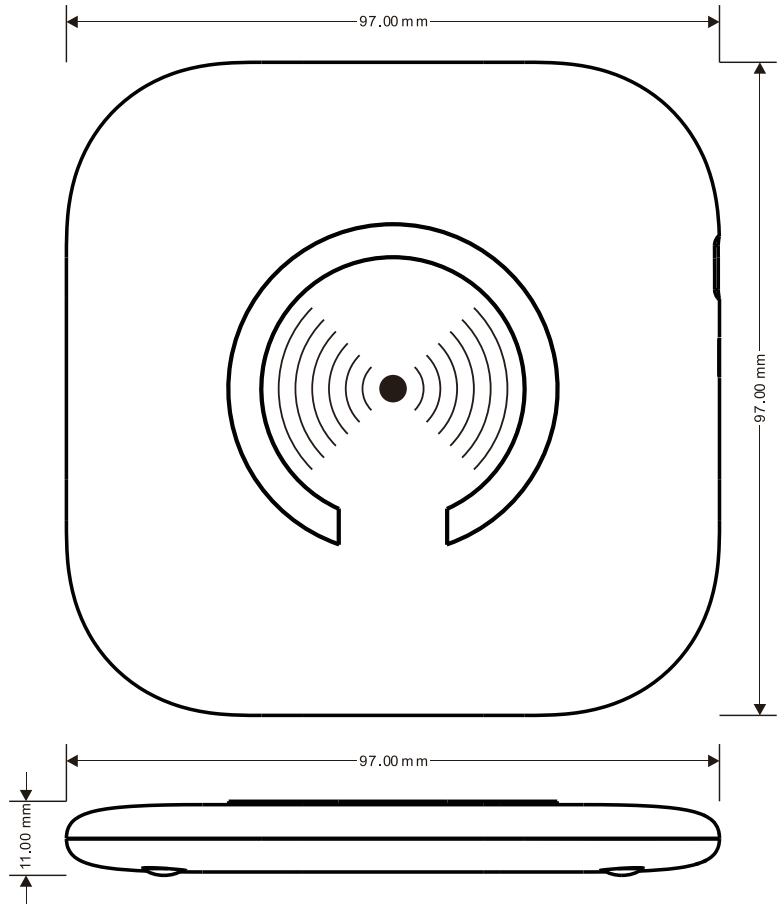

① Power Indicator

② USB-C Input Interface

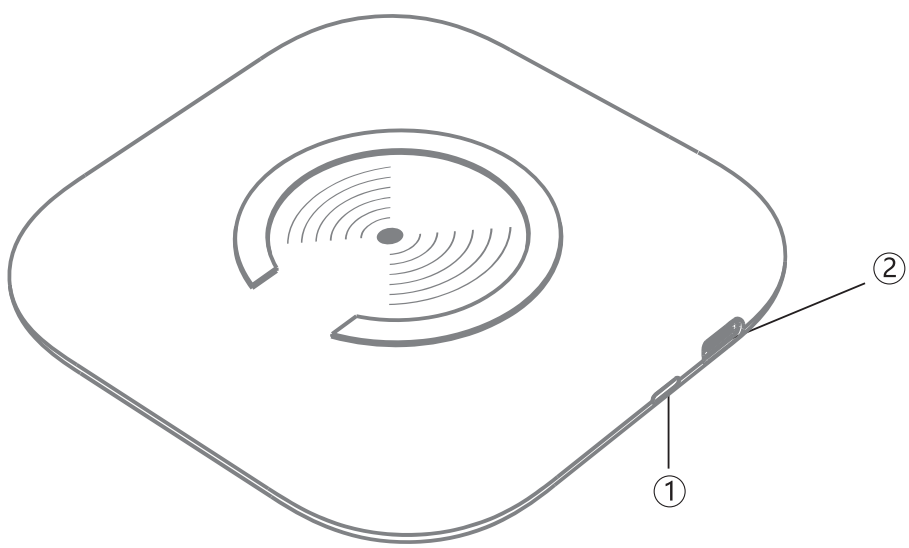

Safety Requirements

- Product should be placed away from the heat source, such as radiators, oven, stove, and other Generate heat products.
- Do not put product in the water, moist air, or corrosive chemicals.
- Do not put the task types items in the product tank or other openings place.
- In order to avoid to damage products,please don’t throw, knock and extruding products.

The name and content identification table of this products' poisonous and harmful substances or elements

Note: parts of PCB components including printed circuit board and its components, such as resistor, capacitor, Integrated circuits, connectors, etc.

Name of Spare Parts	Poisonous and harmful substances or elements					
	Pb	Hg	Cd	Cr^{6+}	PBBs	PBDEs
Plastic Frame	○	○	○	○	○	○
Power Base Board	X	○	○	○	○	○
Main Substrate	X	○	○	○	○	○
Power Cord	○	○	○	○	○	○
Other Wire	X	○	○	○	○	○

○: All the material in the part of homogeneous material content are limited in the SJ/T11363-2006 below requirements.

X: All the material in the part of homogeneous material content exceeds the limited requirements stipulated by the SJ/T11363-2006.

Note: the "X" parts above,section contains harmful substances over is due to the limitation of current industry technology level, temporarily unable Instead of reduction

Use Method

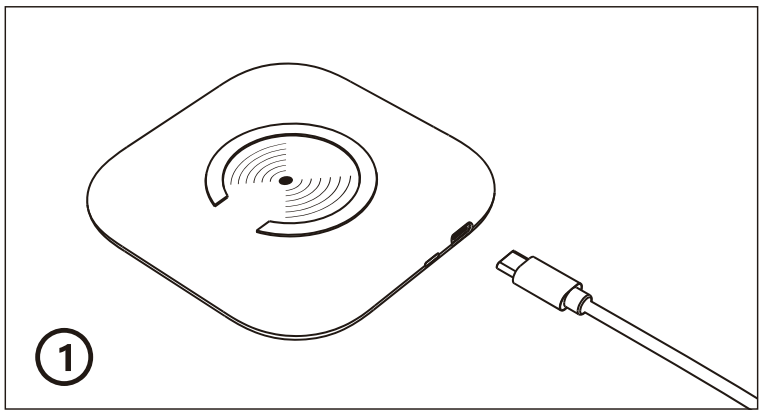

Connect the USB-C power cord to wireless charger pad. wireless charger will then be powered

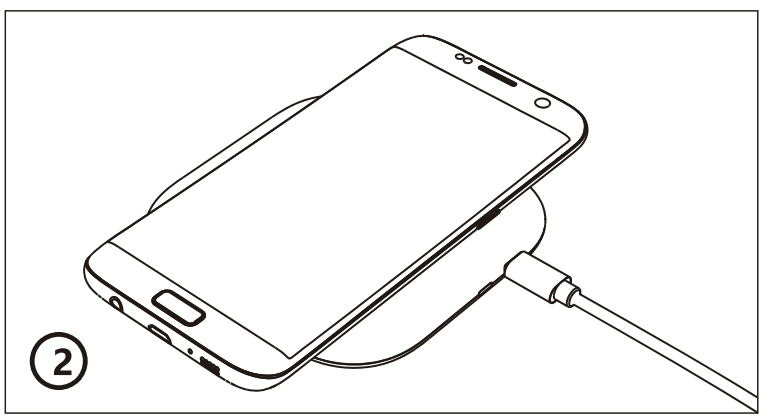

Put your Phone/Tablet on wireless charger pad.
(Please make sure your device supports Qi wireless charging).

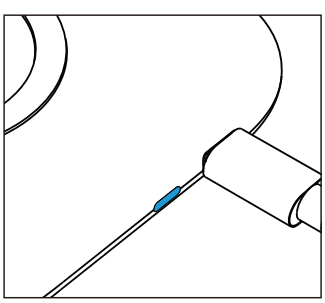

Power-Up State:
blue light flashes 3 times

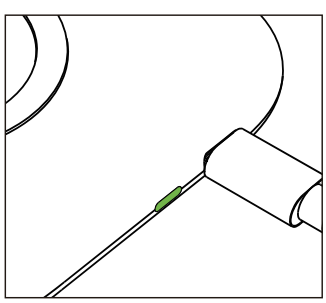

Standby Mode:
the green indicator keeps on

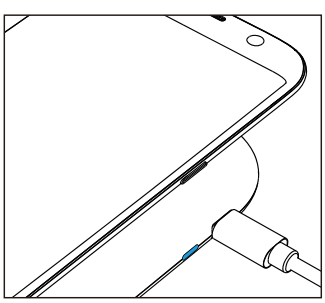

Working status:
the blue indicator keeps on

FEATURES

- This product will work on most of mobile phone or pad support QI wireless charger.
- High efficiency charging.
- Security charger, prevent the occurrence of accident effectively
- Ensure receive full power and also full safety.

INTRODUCTION

Note:
1. Cut off the power connection, if not charging.
2. Suitable for safe use under an altitude of 2000 meters, and non-tropical regions.

WARM TIPS

Please refer to instructions to use the product.

PACKAGE CONTAINS

Wireless Charger * 1

User manual * 1

USB Cable * 1

AFTERSALES SERVICE

This product has a 1 year warranty

Made in China

FCC Statement

The device complies with part 15 and 18 of the FCC rules. Operation is subject to the following two conditions: (1) this device may not cause harmful interference, and (2) this device must accept any interference received, including interference that may cause undesired operation.

Changes or modifications not expressly approved by the party responsible for compliance could void the user's authority to operate the equipment.

Note: this equipment has been tested and found to comply with the limits for a Class B digital device, pursuant to part 15 of the FCC Rules. These limits are designed to provide reasonable protection against harmful interference in a residential installation. This equipment generates uses and can radiate radio frequency energy and if not installed and used in accordance with the instructions, may cause harmful interference to radio communications. However, there is no guarantee that interference will not occur in a particular installation. If this equipment does cause harmful interference to radio or television reception, which can be determined by turning the equipment off and on, the user is encouraged to try to correct the interference by one or more of the following measures:

- Reorient or relocate the receiving antenna.
- Reorient or relocate the receiving antenna.
- Reorient or relocate the receiving antenna.
- Consult the dealer or an experienced radio/TV technician for help important announcement

Radiation Exposure Statement

This equipment complies with FCC radiation exposure limits set forth for an uncontrolled environment. This device has been tested for human exposure limits and found compliant at a minimum distance of 10 cm during operation.

Thus during the operation of device a distance of 10 cm must be respected in every direction.