TYLT

QIVENTBK-T

Fast Wireless Charging Car Vent

User Manual

Features:

- Featuring Qi fast charging specification
- Spring-loaded arms enable one handed operation and securely grip phones up to 6.2″ screen size.
- 180°rotation air vent
- LED light to indicate the charging status
- Over current, overvoltage, and overheating protections

Specifications:

- Input: DC 5V 2A
- Wireless Charging Output: 5W
- Wireless Distance: ≦6mm
- Efficiceny: ≧71%
- Dimension: 78 x 68.2 x 60 mm
- Weight: 75g

How to set up the Air Vent Car Mount

1. Connect the power cable to the car holder. If needed, connect the extension cable.
2. Plug the power supply into the car's cigarette lighter socket.
3. A simple push of one gripper arm holds and locks your device in place and charging starts immediately.

Insert a micro-USB cable for connecting to your vehicle's 12V power outlet

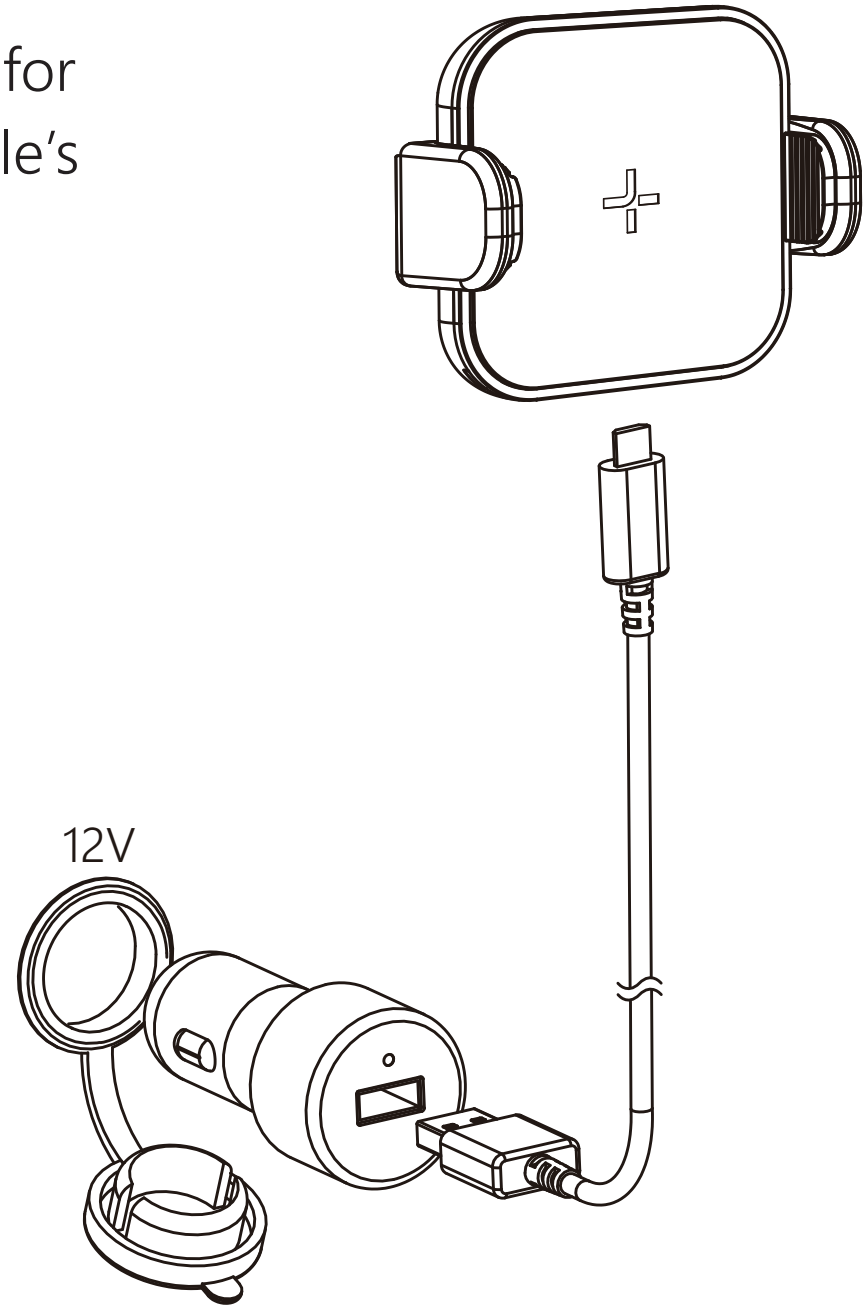

The blue LED illuminates continually during wireless charging and flashes to indicate a charging problem or insufficient current to the vent mount.

LED indicator lights:

No light - standby
Blue flashing - connecting
Blue light - charging

EASILY MOUNTS ON AIR VENT:

The wireless charger car mount attaches easily to the blades of your AC vent and it's fully adjustable to fit any type of car vents.

180° ROTATION:

QIVENTBK-T comes with air vent mount and it provides flexible choice of viewing your phone while driving. The 180 degree rotating ball joint on both mounts enables flexible viewing angles while driving.

Standard accessories:

Wireless charger
Air vent craws
User manual
USB cable
QC car charger

FCC Statement:

This device complies with part 15 of the FCC Rules. Operation is subject to the following two conditions: (1) This device may not cause harmful interference, and (2) this device must accept any interference received, including interference that may cause undesired operation.

This equipment has been tested and found to comply with the limits for a Class B digital device, pursuant to part 15 of the FCC Rules. These limits are designed to provide reasonable protection

against harmful interference in a residential installation. This equipment generates, uses and can radiate radio frequency energy and, if not installed and used in accordance with the instructions, may cause harmful interference to radio communications. However, there is no guarantee that interference will not occur in a particular installation. If this equipment does cause harmful interference to radio or television reception, which can be determined by turning the equipment off and on, the user is encouraged to try to correct the interference by one or more of the following measures:

—Reorient or relocate the receiving antenna.

—Increase the separation between the equipment and receiver.

—Connect the equipment into an outlet on a circuit different from that to which the receiver is connected.

—Consult the dealer or an experienced radio/TV technician for help.

Caution: Any changes or modifications not expressly approved by the party responsiblefor compliance could void the user's authority to operate the equipment.

FCC Statement:
This device complies with part 15 of the FCC Rules. Operation is subject to the following
two conditions: (1) This device may not cause harmful interference, and (2) this device
must accept any interference received, including interference that may cause undesired
operation.
This equipment has been tested and found to comply with the limits for a Class B digital
device, pursuant to part 15 of the FCC Rules. These limits are designed to provide reasonable protection against harmful interference in a residential installation. This equipment generates, uses and can radiate radio frequency energy and, if not installed and used in accordance with the instructions, may cause harmful interference to radio communications. However, there is no guarantee that interference will not occur in a particular installation. If this equipment does cause harmful interference to radio or television reception, which can be determined by turning the equipment off and on, the
user is encouraged to try to correct the interference by one or more of the following measures:
—Reorient or relocate the receiving antenna.
—Increase the separation between the equipment and receiver.—Connect the equipment into an outlet on a circuit different from that to which the receiver is connected.
—Consult the dealer or an experienced radio/TV technician for help.
Caution: Any changes or modifications not expressly approved by the party responsible
for compliance could void the user's authority to operate the equipment.

This equipment complies with FCC radiation exposure limits set forth for an uncontrolled environment. This transmitter must not be co-located or operating in conjunction with any other antenna or transmitter.
This equipment complies with FCC radiation exposure limits set forth for an uncontrolled environment.This equipment should be installed and operated with minimum distance 20cm between the radiator&your body.

MAILING ADDRESS | 685 Cochran Street
Suite #200
Simi Valley, CA 93065

EMAIL | Customer Service: customerservice@TYLT.com
Press: press@TYLT.com

TYLT