User Quick Guide

Product Name: Smart Projector

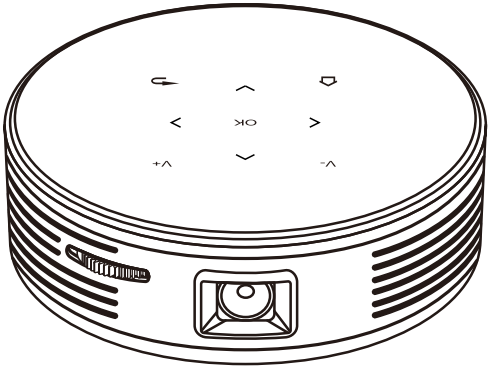

Brand: SOOYINN, ENNBOO, SUNDROR
Model:P18,P18 Plus, P18 Pro, P28, P88, L88

Manufacture: Shenzhen Sooyinn Electronics Co.,Ltd.

Notice

- Do not use or store the device in dusty, hot, cold, electric, chemical, or magnetic areas, or it might damage the device.
- Do not drop, shake or knock the device. Rough handling can break it.
- Please do not disassemble the device or change the case personally, as it will void your warranty.
- Please turn off the device in aircraft and follow any restrictions. Wireless devices can cause interference in aircraft.
- Never play the watch while driving! Please keep your eyes focusing on the road.
- Never use the LED light to illuminate human eyes directly, or it might hurt eyes or cause discomfort or blindness.
- Please use standard charger under specified voltage and current.
- Due to different marketing period, product update, regional disparities or such reasons, we may, without notifications to you, change or modify some functions which could be different from the content in this user guide, please refer to real product on your hand.

Buttons and Interface

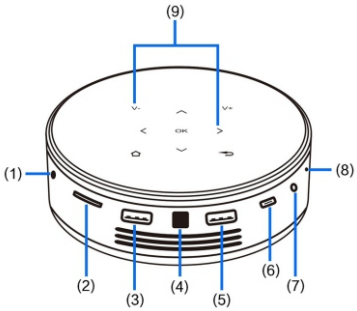

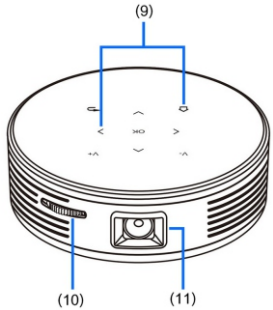

(1) Power

(2) TF Slot

(3) USB 2.0 Port

(4) IR Receiver

(5) USB 2.0 Port

(6) Micro-USB Charging Port

(7) Earphone Jack

(8) Reset

(9) Touch Keys

(10) Focus Wheel

(11) LED Light

Control

The device supports touch and remote control. Touch pad is on top of the device with nine Touch Keys. Icons on touch pad and remote control are specified as following.

∧	Up	V+	Volume up
∨	Down	V-	Volume down
<	Left	⮌	Back / Exit
>	Right	⌂	Home
		⏻	Power

You can long press Back on Remote Control or touch Home key to go back to Main Interface.

You can also use a mouse to control the device. Plug in USB-mouse into device, and left click to confirm, right click to go back or exit current App. Remarks: Mouse is not included in standard accessories.

Basic

Following are instructions of basic operations mostly used on the device.

Power ON / OFF and Standby
Long press Power button on device to turn ON. Long press Power button on device or remote control to turn OFF. Shortly press Power, the device goes to Standby with voice working.

Adjust the Focus
Please adjust the focus by slowly rolling the wheel before using into best display effect.

Remote Control
When using it, please keep the remote control one meter or farther from device and point to IR receiver in order to enjoy best effect of remote control.

Volume Adjustment
Press V+ / V- on remote control or touch pad to adjust volume.

Reset
If the touch pad and remote control are both not working, please long press Reset button for 3 to 5 seconds, and then turn on device again.

Main Interface
At any interface, you can long press Back on Remote Control, or touch Home key to go back to Main Interface. Main Interface includes Status Bar and three Function Categories. Status Bar is on top of the screen, displaying Time, Battery and Network Status. Function Categories include Recommended, Settings and Apps. Use < and > on touch pad or remote control to switch from these three Function Categories.
When one category is chosen, use v to enter subordinate functions.

App installation
You can download from Browser, or copy App packages (.APK) from PC into USB Flash Disk, and use pre-installed File App to find the package and install into this device directly. We suggest you install an App market by USB first, then you can download and install from it.

Recommended

The interface contains some often used functions, like Video, Music, Gallery, Browser, Office, etc.

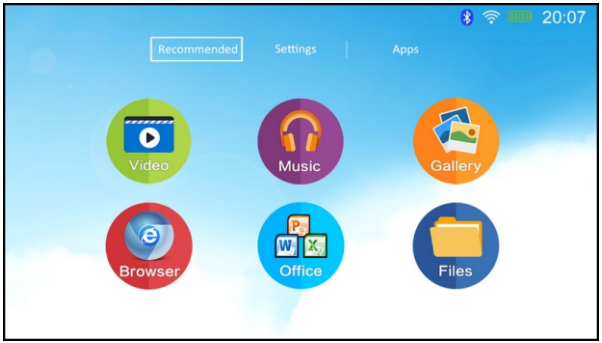

Use < and > on touch pad or remote control to switch from functions, when one function is chosen, use OK to enter.

Tips: These recommended functions are linked to system Apps. You can also use your favorite Apps to support more formats of media files.

Settings

The interface contains some often used settings, like Wi-Fi, Bluetooth, Uninstall, Speed up, etc.

Wi-Fi
Here you can set Wi-Fi network connection, some may need password if necessary.

Bluetooth
Here you can pair the projector with other Bluetooth devices, like BT Speaker.

Settings

Uninstall
Here you can uninstall some Apps pre-installed or installed by yourself. Please notice that if pre-installed Apps are removed, you might not use some functions. You can find back all pre-installed Apps after Factory Reset.

Speed Up
Here you can release some RAM in order to get system faster, but it will also close some Apps backstage. Thus, you need to re-open these Apps after you run Speed Up.

Cleanup
After you run Cleanup, the device automatically clear some system or App trash. Please do periodic cleaning to save spaces.

Autostart
Here you can set auto start-up Apps. We advise you not to add too many auto start-up Apps, or system speed will get slower.

Projector
Here you can adjust brightness of the LED light. Please use lower brightness mode to extend the device life.

Others
Here you can make advanced settings, like Language & input, Backup & reset, Date & time, About device, etc.

About
Here you can view information of the device, like Model, System version, etc.

Apps

In this interface you can view and open all Apps installed in the device. Use < and > on touch pad or remote control to switch from Apps, when one App is chosen, use OK to open it. If you want to uninstall one App, please enter "Settings, and then Uninstall", select the App name, and press OK to uninstall. When move selection to the edge of screen, continue < or > to switch App pages.

Screen Mirroring

With screen mirroring function you can display photos, music, video or image of the Phone on Projector's screen. To achieve this function, the Projector and Phone should be connected with one same Wi-Fi network, and they should both install HappyCast App.

The App is pre-installed into the Projector by factory default. Android Phone user can search HappyCast in Play Stores, and iPhone user in App Store.

You can also open HappyCast in Projector, and scan QR code on the screen to download the App.

After App installation, please follow below steps.

(1) Connect both Projector and Phone with one same Wi-Fi network.
(2) Open HappyCast in Projector.
(3) Open HappyCast in Phone.
(4) Android Phone user tap TV at middle bottom of the App, and choose N2 to connect, after successfully connection, you can display Phone image on Projector. iPhone user tap TV Connect icon and choose N2 to connect. Long press the icon to display iPhone image on Projector, and long press again to cancel.

Specifications

Product Name:	Smart Projector
Projection Type:	DLP
Brightness:	100 ANSI Lumens
Throw Size:	30-inch to 120-inch
Resolution:	854 x 480
CPU:	Quad-core, 1.2GHz
RAM:	1GB
Memory:	8GB
System:	Based on Android 5.1 OS
Wi-Fi:	Supported, Dual-bands
Bluetooth:	Supported, BT 4.0/4.0+EDR
Speaker:	8Ω / 1W
Power Supply:	AC 100-240V / 50-60HZ
Charger Output:	DC 5V / 2A
Charging Port:	Micro-USB

Remarks: System uses part of RAM and Memory, thus real RAM and Memory for users shall be less than nominal value.

FAQ

Q: Why the device cannot be turned on?
A: The most likely reason is that the battery is drained, then the problem can be easily fixed after recharging for 10 minutes. If still not working, please inquire to qualified sellers.

Q: The LED light is OFF, but voice is working, is the projector broken?
A: Please check following two possibilities.
(1) The projector is in Standby mode. You can shortly press Power button to awake screen.
(2) The projector is not turned OFF completely. You can long press Power button for around 8 seconds and then turn ON the device again.

Q: Why some Apps or functions cannot run?
A: Most possibly due to following two reasons.
(1) You removed some pre-installed Apps or files. Please run factory reset if necessary.
(2) Due to laws and regulations in some countries and regions, some Apps or websites might be forbidden.

Q: Same App packages can be installed into Android phones, but cannot be installed into this projector, Why?
A: Although the projector is based on Android system, suitable editions of Apps for projectors and TV are different from those for Android phones. Because Android phones are mostly with vertical screen and touchable by fingers, but projectors and TV are displayed horizontally and mostly without touch function. Thus, if you want to install Apps into projector by packages, please choose App editions for TV or Box. If you cannot distinguish App editions, you can install TV or Box market Apps into the projector and download Apps from these market Apps.

Q: How to run Factory Reset?
A: Go to Settings – Others – Backup & reset – Factory reset, and then follow the instructions on screen.

Remarks: Factory Reset may remove all your personal Apps and files, please back up your files before Factory Reset.

FCC Caution.

This device complies with part 15 of the FCC Rules. Operation is subject to the following two conditions:
(1) This device may not cause harmful interference, and
(2) this device must accept any interference received, including interference that may cause undesired operation.

Any Changes or modifications not expressly approved by the party responsible for compliance could void the user's authority to operate the equipment.

Note: This equipment has been tested and found to comply with the limits for a Class B digital device, pursuant to part 15 of the FCC Rules. These limits are designed to provide reasonable protection against harmful interference in a residential installation. This equipment generates uses and can radiate radio frequency energy and, if not installed and used in accordance with the instructions, may cause harmful interference to radio communications. However, there is no guarantee that interference will not occur in a particular installation. If this equipment does cause harmful interference to radio or television reception, which can be determined by turning the equipment off and on, the user is encouraged to try to correct the interference by one or more of the following measures:
-Reorient or relocate the receiving antenna.
-Increase the separation between the equipment and receiver.
-Connect the equipment into an outlet on a circuit different from that to which the receiver is connected.
-Consult the dealer or an experienced radio/TV technician for help.

This equipment complies with FCC radiation exposure limits set forth for an uncontrolled environment. This equipment should be installed and operated with minimum distance 20cm between the radiator & your body.

For 5150-5250 frequency band, add below statement for indoor use warning statement on manual, Operations in the 5.15-5.25GHz band are restricted to indoor usage only.