Product: Bluetooth Mesh Module
Trade Name: LinkCom
Model Number: LCBTMD02

Bluetooth Mesh Module Datasheet

1. Product introduction
1.1：Product overview
1.2：Product features and parameters
1.3：Product application
1.4：Bluetooth Module specification
2：Product hardware introduction
2.1：Module photo
2.2：Module configuration and interface
2.3：Module interface definition
2.4：Bluetooth Block Diagram
2.5：Antenna design
2.6：PCB design description
2.7：Rest
3：Contact information

1：Product introduction

1.1：Product overview

LCBTMDD02 smart Bluetooth module is compatible with Bluetooth 4 low power consumption (BLE) and mesh networking function of the Bluetooth module. It is mainly used in intelligent lamp control, smart home, consumer electronics, industrial control, etc., can meet the requirements of low power consumption, low latency, short-range wireless data communications.

1.2：Product features and parameters

Category	Project	Parameter
Wireless parameters	Wireless standard	Bluetooth 4.0
	RF Link data rata	1Mbps
	Frequency range	2402MHz - 2483 MHz
	Tx output power	Max 5dBm
	Rx Sensitivity	≤-92dBm
	Antenna type	Plate antenna
Hardware parameters	Data interface	PWM
		UART
		SPI / I2C
		Maximum support 17 Road GPIO
	Working voltage	3.3V ± 5%
	Supply current	≥35mA
	Power	Deep sleep mode:3uA
		Suspend mode:20uA
		Mesh working mode: 28 mA
	Transmission distance	Outdoor open 40m
	Working temperature	- 40℃~ + 75℃
	Module size	18.8mm x 11.6mm x 1.5mm

1.3：Product application

1. Home / building automation
2. The intelligent lighting control system
3. Air conditioning - wireless network control
4. Industrial control
5. Wearable devices
6. Low power wireless sensor network

1.4 : Bluetooth Module specification

RF Type	Bluetooth 4.0 BLE
RF Modulation	GFSK
Data Throughput	2Mbps
Expected Delay (Latency Range) in Wireless (RF) Communication	The latency time is less then 0.3ms from sender to receiver.
Integrity	Channel Quality-Driven Data Rate (CQDDR) technology increases the effective data rate and integrity in noisy environments.
Security	AES-128 and application layer user defined
Wireless Operation Distance	Class 2 (Maximum: 20 meter)
RF Frequency / Need for Spectrum Management	2402 - 2480 MHz (allowing for guard bands)
Maximum Limitation	Unlimited
Maximum Permitted Power	28mA
Proximity of Other In-band Transmitters Used in Vicinity	up to 40 bands (2 MHz spacing; centered from 2402 to 2480 MHz)
Wireless Communication Profile	GATT – Client and Server
Wireless Coexistence	Support for 802.15.1 Coexistence
System requirement of the Bluetooth device	Android 4.3 or above, iPhone 4S or above

2：Product hardware introduction

2.1 : Module photo

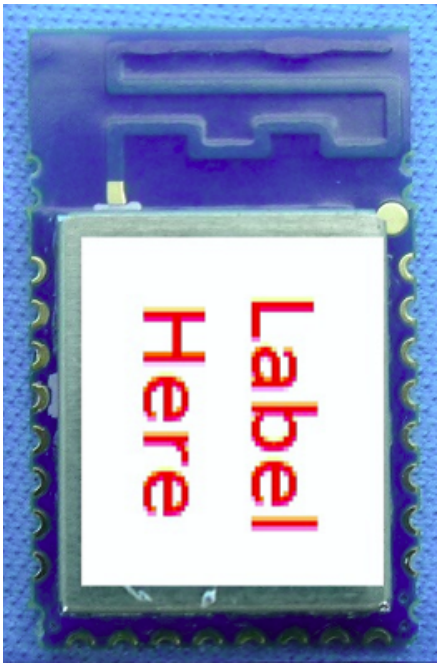

2.2 Module configuration and interface

The module is shown as follows: the external 24 pins, detailed pin functions refer to the following table；

Bluetooth Module Pin Description

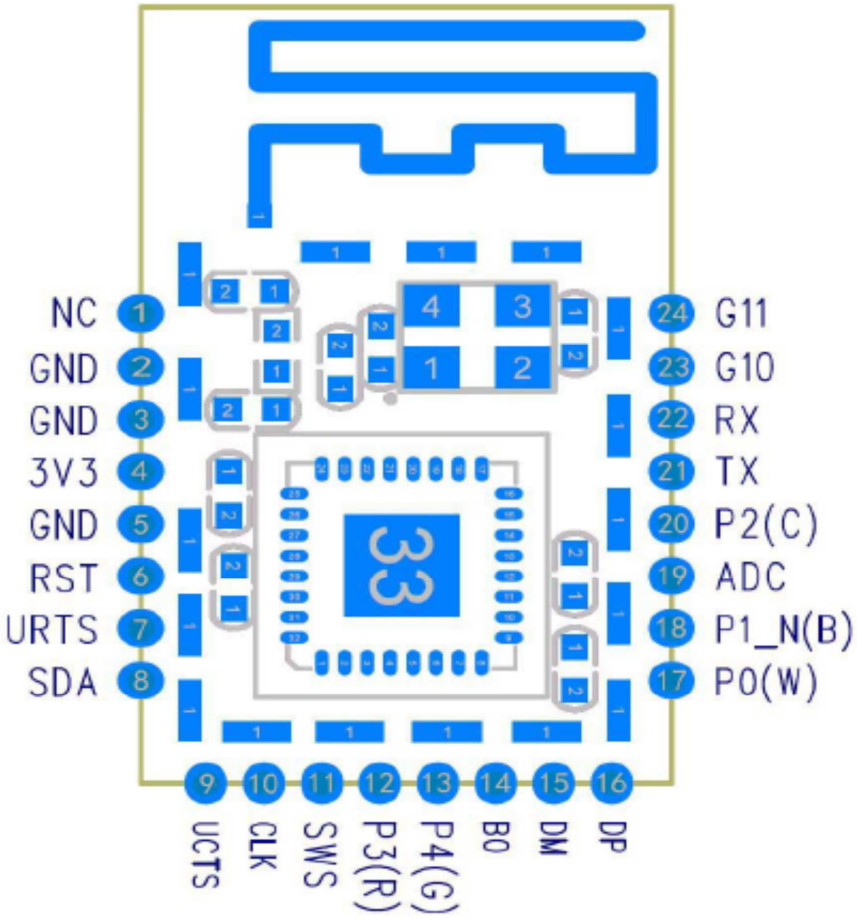

Bluetooth Module Pin Description

Note: the above antenna part is onboard antenna area (5.5mm from top), using the on board antenna, the antenna area in PCB layout clearance.

2.3 : Module interface definition

Pin	Function	Detailed description
1	ANT	External antenna interface, the use of this interface, the module needs to switch through a resistor to the antenna and external antenna；
2	GND	GND input；
3	GND	GND input；
4	VCC_3V3	VCC input；
5	GND	GND input；
6	RST	Power on reset, low effective；
7	URTS	SPI chip select,Active low/UART _RTS
8	SDA	SPI data /I2C data, using I2C to pull 3.3K
9	UCTS	SPI data output / UART _CTS
10	CLK	SPI clock, /I2C clock, using I2C to pull 3.3K
11	SWS	System debug interface
12	P3(R)	The red PWM output, high efficiency, can be customized for the GPIO function
13	P4(G)	The Green PWM output, high efficiency, can be customized for the GPIO function
14	B0	The default output high level, can be customized for the common GPIO
15	DM	USB-
16	DP	USB+
17	P0(W)	The Warm white PWM output, high efficiency, can be customized for the GPIO function
18	P1_N(B)	The Blue PWM output, high efficiency, can be customized for the GPIO function
19	ADC	ADC interface
20	P2(C)	The White PWM output, high efficiency, can be customized for the GPIO function
21	TX	UART_TX
22	RX	Light switch button input，UART_RX
23	G10	Color change button input，
24	G11	GPIO11

Note: the 22 and 23 pin is defined as a key input pin, when the module needs to function keys, Download firmware with key functions can be used to switch key input light and color change, when using, need pull ups are.

2.4 : Bluetooth Block Diagram

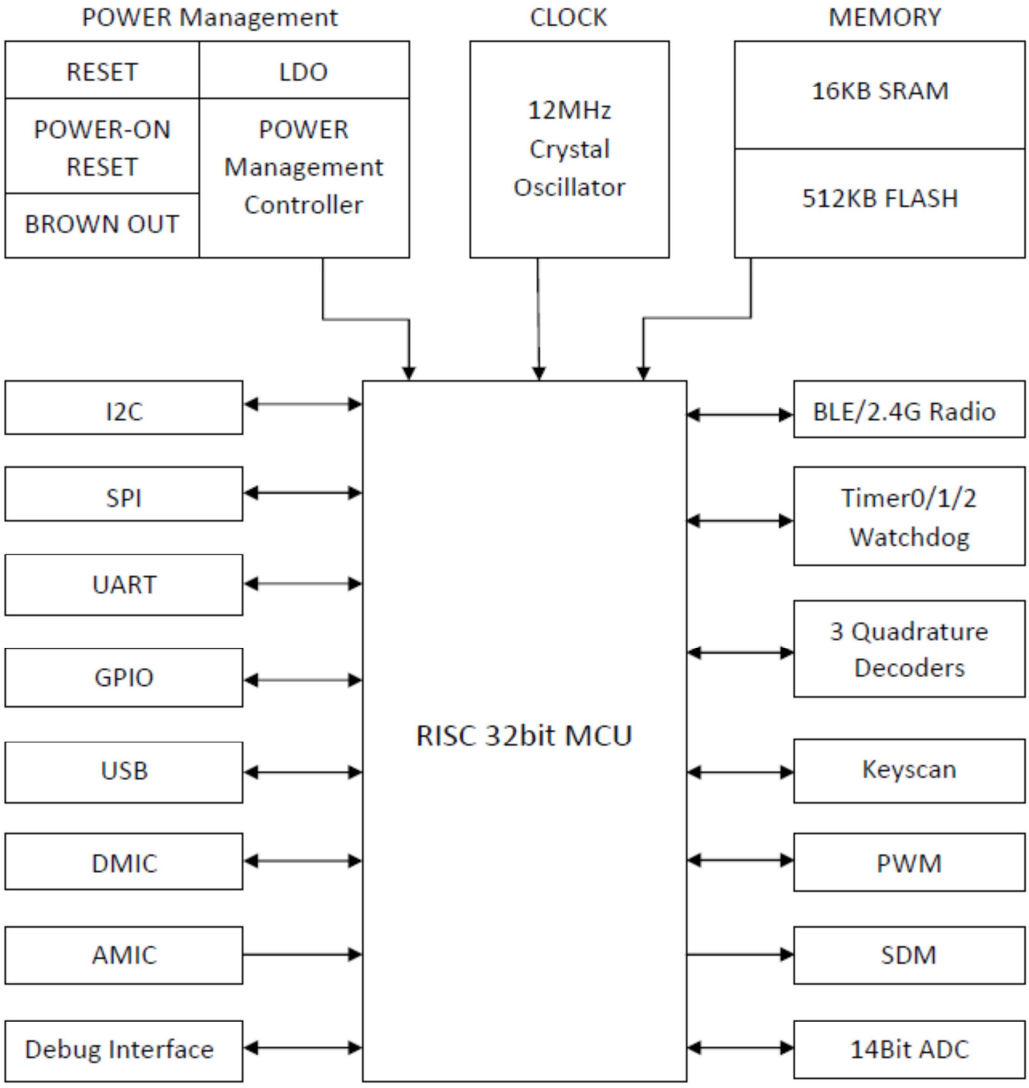

2.5 : Antenna design

When the customer selects the internal on-board antenna, antenna design should comply with the following rules and modules of the proposed location:

② ：The antenna must be away from the metal or high component of at least 10 mm

②：The antenna can not be any piece of enclosure protection All shells, including plastics, should be kept away from the antenna area at least 10 mm

2.6 : PCB design description

The power to recommend the use of LDO for DC 3.3V, provide the driving current of at least 30mA, the module of power capacitor placed a 10uF proposalIn the PCB layout, the BLE module is placed should be kept away from the magnetic field source such as transformers and coils

2.7 : Rest

When the module network, to back network, no mobile phone APP on the network when the network back, the need for a hardware reset reset method: power up and down in the form of (three short and two long), first power on 1-3S, and then, repeat 3 times, then 2 long time the 5-10S on the electrical operation can be reset。

3：Contact information

Address： 5F., No. 127, Ln. 235, Baoqiao Rd., Xindian Dist., New Taipei City 231, Taiwan

Phone： +886-2-8919-1380

Fax： +886-2-8919-1370

Website： http://www.linkcom.com.tw

Email： sales@linkcom.com.tw

ORIGINAL EQUIPMENT MANUFACTURER (OEM) NOTES

The OEM must certify the final end product to comply with unintentional radiators (FCC Sections 15.107 and 15.109) before declaring compliance of the final product to Part 15 of the FCC rules and regulations. Integration into devices that are directly or indirectly connected to AC lines must add with Class II Permissive Change.

The OEM must comply with the FCC labeling requirements. If the module's label is not visible when installed, then an additional permanent label must be applied on the outside of the finished product which states: "Contains transmitter module FCC ID: **2AOC5LCBTMD02**". Additionally, the following statement should be included on the label and in the final product's user manual: "This device complies with Part 15 of the FCC Rules. Operation is subject to the following two conditions: (1) This device may not cause harmful interferences, and (2) this device must accept any interference received, including interference that may cause undesired operation."

The module is limited to installation in mobile or fixed applications. Separate approval is required for all other operating configurations, including portable configuration with respect to Part 2.1093 and different antenna configurations.

A module or modules can only be used without additional authorizations if they have been tested and granted under the same intended end-use operational conditions, including simultaneous transmission operations. When they have not been tested and granted in this manner, additional testing and/or FCC application filing may be required. The most straightforward approach to address additional testing conditions is to have the grantee responsible for the certification of at least one of the modules submit a permissive change application. When having a module grantee file a permissive change is not practical or feasible, the following guidance provides some additional options for host manufacturers. Integrations using modules where additional testing and/or FCC application filing(s) may be required are: (A) a module used in devices requiring additional RF exposure compliance information (e.g., MPE evaluation or SAR testing); (B) limited and/or split modules not meeting all of the module requirements; and (C) simultaneous transmissions for independent collocated transmitters not previously granted together.

This Module is full modular approval, it is limited to OEM installation ONLY.
Integration into devices that are directly or indirectly connected to AC lines must add with Class II Permissive Change.
(OEM) Integrator has to assure compliance of the entire end product include the integrated Module. Additional measurements (15B) and/or equipment authorizations (e.g Verification) may need to be addressed depending on co-location or simultaneous transmission issues if applicable.
(OEM) Integrator is reminded to assure that these installation instructions will not be made available to the end user of the final host device.