MODULE SPECIFICATION

Model: ZEN-BDM10A-V2.0

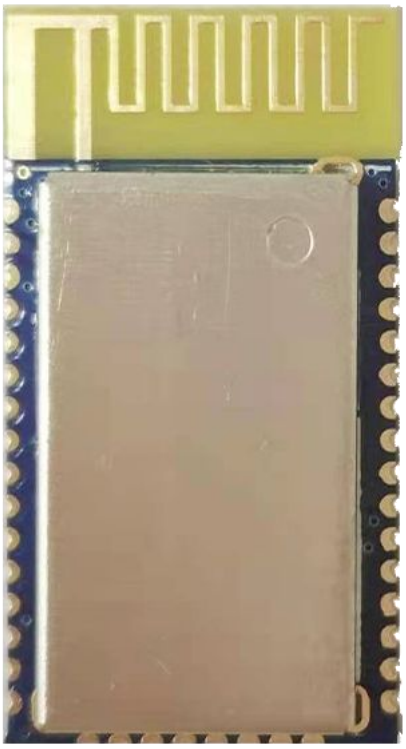

Shanghai Zenchant Electronics Co., LTD

1. Overview

The ZEN-BDM10 Bluetooth module is based on the AC6926A chip design and conforms to the Bluetooth 5.0 specification. This module can realize Bluetooth BLE/SPP data transmission, voice transmission, Bluetooth music playback, U disk /TF card audio decoding, TF card reader and other functions. The module pins are drawn with stamp holes, which can easily connect peripheral circuits, greatly reducing the application difficulty and design time of customers, and reducing the bottom cost for enterprises. This module is an excellent solution for speaker system, smart home and other applications!

1.1 Features：

- ✧ Comply with Bluetooth 5.0 specification
- ✧ Support BLE data transfer
- ✧ Support HID Profile
- ✧ Support the GATT
- ✧ Support for classic Bluetooth protocol (A2DP/AVRCP/HFP/SPP/HID)
- ✧ 16 bit stereo audio DAC output
- ✧ 12-bit precision 1-channel stereo audio ADC with MIC amplifier circuit
- ✧ Support IIS digital audio output
- ✧ External audio input interface
- ✧ Three way high speed UART interface
- ✧ USB 2.0 Full Speed OTG control interface
- ✧ Support U disk, card reader, USB sound card, and other applications
- ✧ SDIO read-write SD/MMC CARDS are supported.
- ✧ The module is equipped with 2.4g PCB antenna

1.2Applications

- ✧ Bluetooth speakers
- ✧ Smart home
- ✧ The data transfer

2. Functional Block Diagram

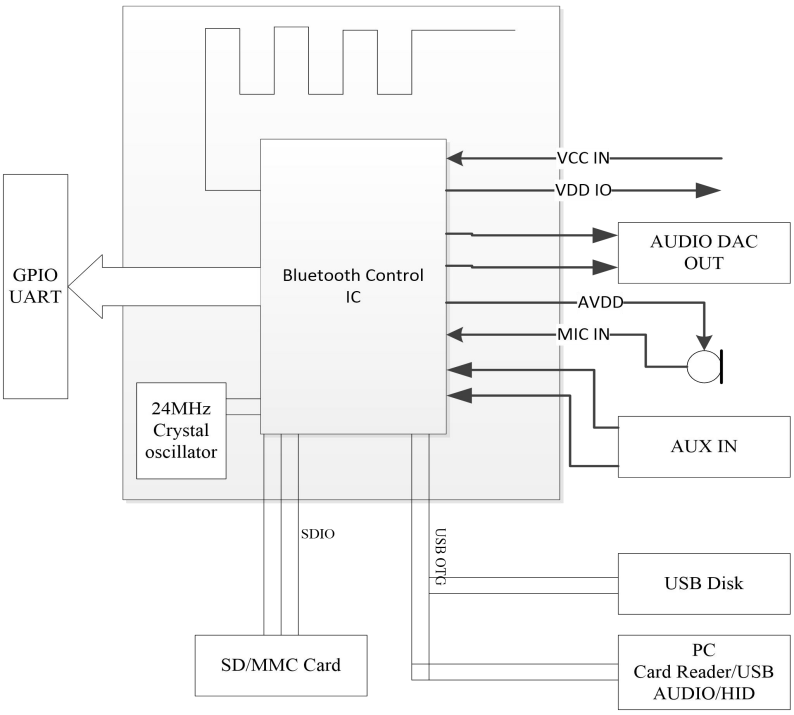

3. Pin Configuration

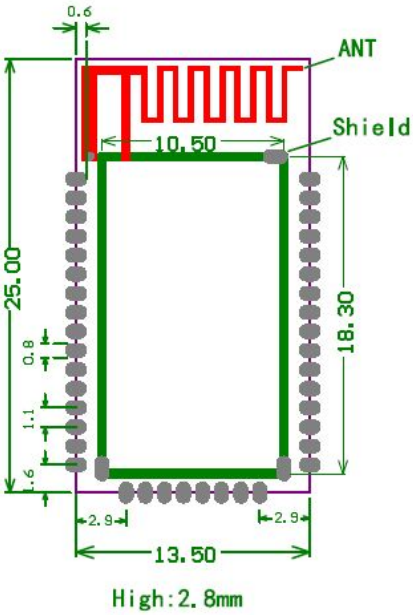

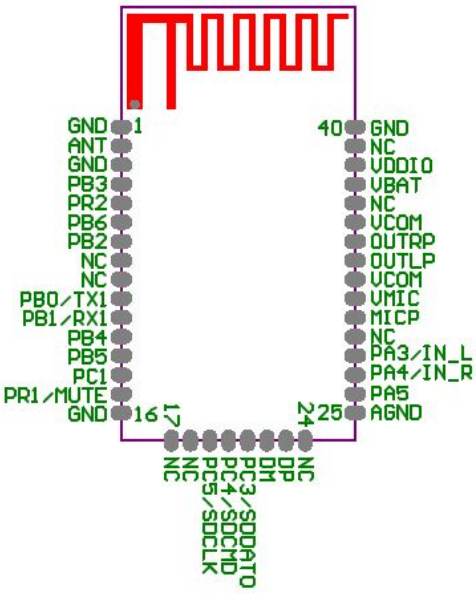

4. Typical application circuits

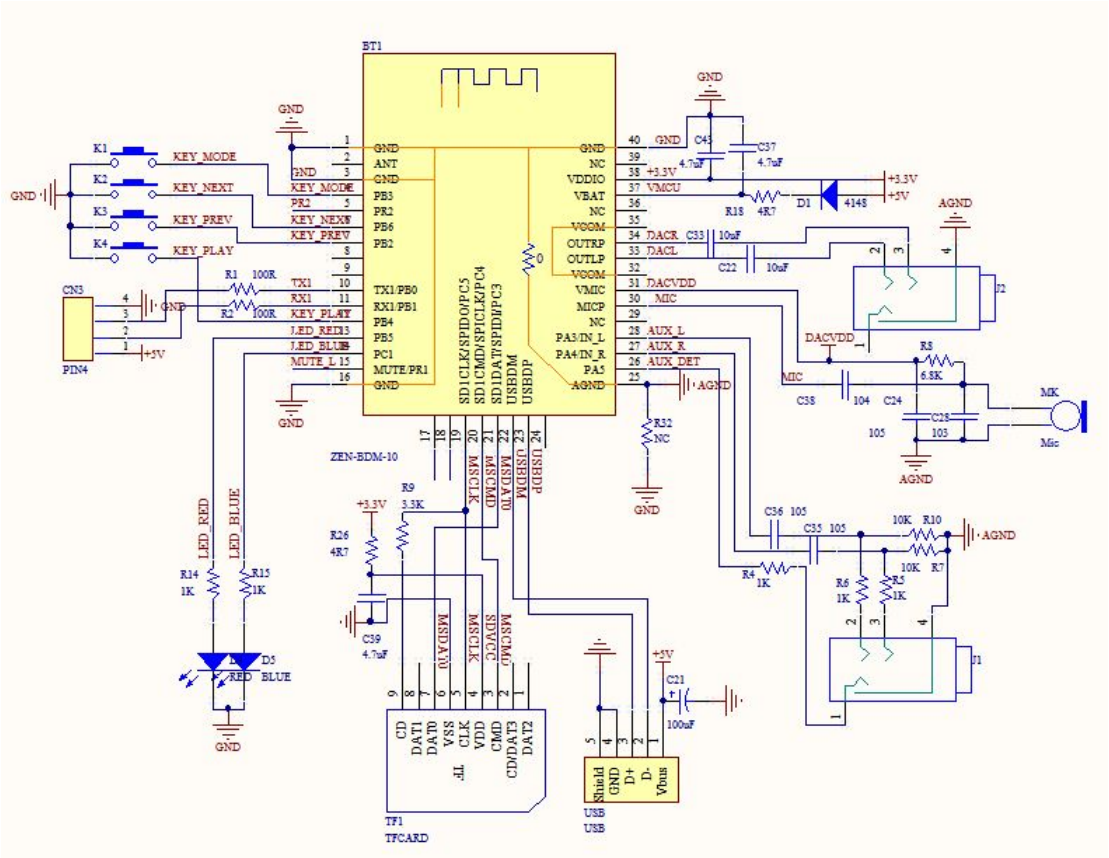

5. Module hardware function specifications

1.1 PMU Characteristics

Symbol	Parameter	Min	Typ	Max	Unit	Test Conditions
VBAT	Voltage Input	2.2	3.7	5.5	V	
VDDIO	Voltage output	--	3.3	--	V	VBAT = 5V,100mA
VMIC	ADC/DAC Voltage	--	3.1	--	V	VBAT = 5V,100mA
I_{VDDIO}	Loading current	--	--	150	mA	VBAT =5V

1.2 IO Input/Out Electrical Logical Characteristics

IO Input Characteristics						
Symbol	Parameter	Min	Typ	Max	Unit	Test Conditions
V_{IL}	Low-Level Input Voltage	-0.3	--	0.3* VDDIO	V	VDDIO = 3.3V
V_{IH}	High-Level Input Voltage	0.7* VDDIO	3.3	--	V	VBAT = 5V,100mA
IO output characteristics						
V_{OL}	Low-Level	--	--	0.33	V	VDDIO = 3.3V

	Output Voltage					
V_{OH}	High-Level Output Voltage	2.7	--	--	V	VDDIO=3.3V

1.3 Internal Resistor Characteristics

Port	General Output	High Drive	Internal Pull-Up Resistor	Internal Pull-Down Resistor	Comment
PAx PCx	8mA	24mA	10K	10K	1. PR1 Default Out 0 2. PR2 Default Pull up 3. USBDP/DM default pull down
PBx	4mA	8mA	10K	10K	
PRx	8mA	10mA	10K	10K	
USBDM USBDP	4mA	--	1.5K	15K	

1.4 DAC Characteristics

Parameter	Min	Typ	Max	Unit	Test Conditions
Frequency Response	20	--	20K	Hz	1KHz/0dB 10Kohm Loading With A-Weighted Filter
THD+N	--	-69	--	dB	
S/N	--	95	--	dB	
Crosstalk	--	-80	--	dB	
Output Swing		1		Vrms	
Dynamic Range		90		dB	1KHz/-60dB 10Kohm Loading With A-Weighted Filter
DAC Output Power	11			mW	32 ohm Loading

1.5 ADC Characteristics

Parameter	Min	Typ	Max	Unit	Test Conditions
Dynamic Range		85		dB	1KHz/-60dB 10Kohm Loading With A-Weighted Filter
S/N		90		dB	1KHz/-60dB 10Kohm Loading With A-Weighted Filter
THD+N		-72		dB	
Crosstalk		-80		dB	

1.6 BT Characteristics

1.6.1 Transmitter

Basic Data Rate

Parameter		Min	Typ	Max	Unit	Test Conditions
RF Transmit Power			0	4	dBm	25℃, Power Supply Voltage=5V 2441MHz
RF Power Control Range			20		dB	
20dB Bandwidth			950		KHz	
Adjacent Channel Transmit Power	+2MHz		-40		dBm	
	-2MHz		-38		dBm	
	+3MHz		-44		dBm	
	-3MHz		-35		dBm	

Enhanced Data Rate

Parameter	Min	Typ	Max	Unit	Test Conditions

Relative Power			1.2		dBm	25℃, Power Supply Voltage=5V 2441MHz
π/4 DQPSK Modulation Accuracy	DEVM RMS		6		%	
	DEVM 99%		10		%	
	DEVM Peak		15		%	
Adjacent Channel Transmit Power	+2MHz		-40		dBm	
	-2MHz		-38		dBm	
	+3MHz		-44		dBm	
	-3MHz		-35		dBm	

1.6.2 Receive

Basic Data Rate

Parameter		Min	Typ	Max	Unit	Test Conditions
Sensitivity			-89		dBm	25℃, Power Supply Voltage=5V 2441MHz
Co-channel Interference Rejection			-13		dB	
Adjacent Channel Transmit Power	+1MHz		+5		dBm	
	+1MHz		+2		dBm	
	+2MHz		-37		dBm	
	-2MHz		-36		dBm	
	+3MHz		-40		dBm	
	-3MHz		-35		dBm	

Enhanced Data Rate

Parameter		Min	Typ	Max	Unit	Test Conditions
Sensitivity			-89		dBm	25℃, Power Supply Voltage=5V 2441MHz
Co-channel Interference Rejection			-13		dB	
Adjacent Channel Transmit Power	+1MHz		+5		dBm	
	+1MHz		+2		dBm	
	+2MHz		-37		dBm	
	-2MHz		-36		dBm	
	+3MHz		-40		dBm	
	-3MHz		-35		dBm	

6. Product options

Model	Instructions	Photo
ZEN-BDM10_V2.0	Generic version	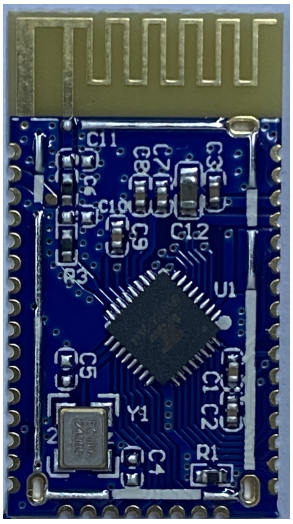
ZEN-BDM10A-V2.0	With a mask version	

7. Release notes

Date	Version	Instructions
2020.08.13	V1.0	New document
2020.10.14	V1.1	Modify typical application circuit for USB
2021.01.29	V2.0	The hardware version is modified to v2.0, The antenna part is mainly modified

FCC Statement:

This device complies with part 15 of the FCC rules. Operation is subject to the following two conditions:

(1) this device may not cause harmful interference, and

(2) this device must accept any interference received, including interference that may cause undesired operation.

NOTE: The manufacturer is not responsible for any radio or TV interference caused by unauthorized modifications or changes to this equipment. Such modifications or changes could void the user's authority to operate the equipment.

NOTE: This equipment has been tested and found to comply with the limits for a Class B digital device, pursuant to part 15 of the FCC Rules. These limits are designed to provide reasonable protection against harmful interference in a residential installation. This equipment generates uses and can radiate radio frequency energy and, if not installed and used in accordance with the instructions, may cause harmful interference to radio communications. However, there is no guarantee that interference will not occur in a particular installation. If this equipment does cause harmful interference to radio or television reception, which can be determined by turning the equipment off and on, the user is encouraged to try to correct the interference by one or more of the following measures:

- Reorient or relocate the receiving antenna.
- Increase the separation between the equipment and receiver.
- Connect the equipment into an outlet on a circuit different from that to which the receiver is connected.
- Consult the dealer or an experienced radio/TV technician for help.

This device is intended only for OEM integrators under the following conditions:

1. The antenna must be installed such that 20 cm is maintained between the antenna and users.
2. The transmitter module may not be co-located with any other transmitter or antenna. As long as the two conditions above are met, additional transmitter testing will not be required. However, the OEM integrator is still responsible for testing their end-product for any additional compliance requirements required for the installed module.

Important Note:

In the event that these conditions cannot be met (for example certain laptop configurations or co-location with
another transmitter), then the Federal Communications Commission of the
U.S. Government (FCC) and the Canadian Government authorizations are no longer considered valid and the FCC ID and IC ID cannot be used on the final product. In these circumstances, the OEM integrator shall be responsible for re-evaluating the end-product (including the transmitter) and obtaining a separate FCC and IC authorization in the U.S. and

Canada.

OEM Integrators - End Product Labeling Considerations:

This transmitter module is authorized only for use in device where the antenna may be installed such that 20 cm may be maintained between the antenna and users. The final end product must be labeled in a visible area with the following: “Contains, FCC ID: 2AOC9-ZENBDM10AV20. The grantee's FCC ID can be used only when all FCC compliance requirements are met.

OEM Integrators - End Product Manual Provided to the End User:

The OEM integrator shall not provide information to the end user regarding how to install or remove this RF module in end product user manual. The end user manual must include all required regulatory information and warnings as outlined in this document.