S T S LAB

SAR TEST REPORT

Report No.: STS2107006H02

Issued for

Siyata Mobile Inc.

1001 Lenoir St Suite A, Montreal, Quebec H4C 2Z6 Canada

Product Name:	Siyata SD7
Brand Name:	Siyata
Model Name:	SD7
Series Model:	N/A
FCC ID:	2AOCX-SD7
IC:	23378-SD7
Test Standard:	ANSI/IEEE Std. C95.1
	FCC 47 CFR Part 2 (2.1093)
	IEEE 1528: 2013
	RSS 102 Issue 5,March 2015
	IEC/IEEE 62209-1528:2020
Max. Report SAR:	Front of face: 0.389 W/kg
	Body: 1.162 W/kg

Any reproduction of this document must be done in full. No single part of this document may be reproduced without permission from STS, All Test Data Presented in this report is only applicable to presented Test sample.

ShenZhen STS Test Services Co.,Ltd.
A 1/F, Building B, Zhuoke Science Park, No.190 Chongqing Road, HepingShequ, Fuyong Sub-District, Bao'an District, Shenzhen, Guang Dong, China
TEL: +86-755 3688 6288 FAX: +86-755 3688 6277 E-mail:sts@stsapp.com

TESTING • CONSULTING • CERTIFICATION • SOLUTION
APPROVAL

Test Report Certification

Applicant's name ..... : Siyata Mobile Inc.

Address ..... : 1001 Lenoir St Suite A, Montreal, Quebec H4C 2Z6 Canada

Manufacturer's Name ..... : Siyata Mobile Inc.

Address ..... : 1001 Lenoir St Suite A, Montreal, Quebec H4C 2Z6 Canada

Product description

Product name ..... : Siyata SD7

Brand name ..... : Siyata

Model name ..... : SD7

Series Model..... : N/A

Standards ..... : ANSI/IEEE Std. C95.1-1992
FCC 47 CFR Part 2 (2.1093)
IEEE 1528: 2013
RSS 102 Issue 5,March 2015
IEC/IEEE 62209-1528:2020

The device was tested by Shenzhen STS Test Services Co., Ltd. in accordance with the measurement methods and procedures specified in KDB 865664 The test results in this report apply only to the tested sample of the stated device/equipment. Other similar device/equipment will not necessarily produce the same results due to production tolerance and measurement uncertainties.

Date of Test .....:

Date (s) of performance of tests .....: 14 Sep. 2021 ~ 09 Oct. 2021

Date of Issue.....: 27 Oct. 2021

Test Result.....: **Pass**

Testing Engineer : Luffy He

(Luffy He)

Technical Manager : Sean She

(Sean she)

Authorized Signatory : Vita Li

(Vita Li)

TESTING • CONSULTING • SOLUTION • CERTIFICATION • STS APPROVAL

Table of Contents

1. General Information **5**

1.1 EUT Description 5

1.2 Test Environment 7

1.3 Test Factory 7

2. Test Standards and Limits **8**

3. SAR Measurement System **10**

3.1 Definition of Specific Absorption Rate (SAR) 10

3.2 SAR System 10

4. Tissue Simulating Liquids **13**

4.1 Simulating Liquids Parameter Check 13

5. SAR System Validation **17**

5.1 Validation System 17

5.2 Validation Result 17

6. SAR Evaluation Procedures **18**

7. EUT Test Position **19**

8. Uncertainty **20**

8.1 Measurement Uncertainty 20

8.2 System validation Uncertainty 21

9. Conducted Power Measurement **22**

9.1 Test Result 22

9.2 SAR Test Exclusions Applied 88

11. EUT and Test Setup Photo **89**

11.1 EUT Photo 89

11.2 Setup Photo 92

12. SAR Result Summary **94**

12.1 Front of face SAR 94

12.2 Body SAR 97

12.2 repeated SAR measurement 102

13. Equipment List **107**

Appendix A. System Validation Plots **108**

Appendix B. SAR Test Plots **130**

Appendix C. Probe Calibration and Dipole Calibration Report **172**

Revision History

Rev.	Issue Date	Report No.	Effect Page	Contents
00	27 Oct. 2021	STS2107006H02	ALL	Initial Issue

1. General Information

Environmental evaluation measurements of specific absorption rate (SAR) distributions in emulated human head and body tissues exposed to radio frequency (RF) radiation from wireless portable devices for compliance with the rules and regulations of the U.S. Federal Communications Commission (FCC).

1.1 EUT Description

Product Name	Siyata SD7			
Brand Name	Siyata			
Model Name	SD7			
Series Model	N/A			
Model Difference	N/A			
Battery	Rated Voltage:3.85V Charge Limit Voltage:4.4V Capacity: 4400mAh			
Device Category	Portable			
Product stage	Production unit			
RF Exposure Environment	General Population / Uncontrolled			
IMEI	356973970000533			
Hardware Version	V2.0			
Software Version	TD0301_JACS_V1.0.0			
Frequency Range	WCDMA Band II: 1850 MHz ~ 1910 MHz WCDMA Band IV:1710 MHz ~ 1755 MHz WCDMA Band V: 824 MHz ~ 849 MHz LTE Band 2: 1850 MHz ~ 1910 MHz LTE Band 4: 1710 MHz ~ 1755 MHz LTE Band 5: 824 MHz ~ 849 MHz LTE Band 7: 2500 MHz ~ 2570 MHz LTE Band 12: 699 MHz ~ 716 MHz LTE Band 13: 777 MHz ~ 787 MHz LTE Band 14: 788 MHz ~ 798 MHz LTE Band 17: 704 MHz ~ 714 MHz LTE Band 25: 1820 MHz ~ 1915 MHz LTE Band 26: FCC: 814 MHz ~ 849 MHz IC: 824MHz ~ 849 MHz LTE Band 41: FCC: 2496 MHz ~ 2690 MHz IC: 2570MHz ~ 2620 MHz LTE Band 66: 1710 MHz ~ 1780 MHz LTE Band 71: 663 MHz ~ 698 MHz WLAN802.11b/g/n20: 2412 MHz ~ 2462 MHz WLAN 802.11n40: 2422 MHz ~ 2452 MHz WLAN 802.11a/n20/n40/ac20/ac40/ac80: 5150 ~ 5250 MHz WLAN 802.11a/n20/n40/ac20/ac40/ac80: 5250 ~ 5350 MHz WLAN 802.11a/n20/n40/ac20/ac40/ac80: FCC: 5470 ~ 5725 MHz IC: 5470 ~ 5590 MHz, 5660 ~ 5725 MHz WLAN 802.11a/n20/n40/ac20/ac40/ac80: 5725 ~ 5850 MHz Bluetooth: 2402 MHz to 2480 MHz			
Max. Reported SAR	Band	Mode	Front of face-1g (W/kg)	Body-1g (W/kg)
	PCE	WCDMA Band II	0.091	0.959

	PCE	WCDMA Band V	0.123	0.907
	PCE	WCDMA Band IV	0.139	0.325
	PCE	LTE Band 2	0.196	1.162
	PCE	LTE Band 4	0.154	1.115
	PCE	LTE Band 5	0.123	0.659
	PCE	LTE Band 7	0.022	0.818
	PCE	LTE Band 12	0.052	0.578
	PCE	LTE Band 13	0.145	0.567
	PCE	LTE Band 14	0.133	0.836
	PCE	LTE Band 17	0.130	0.476
	PCE	LTE Band 25	0.141	0.915
	PCE	LTE Band 26	0.050	0.692
	PCE	LTE Band 41	0.198	0.446
	PCE	LTE Band 66	0.121	1.100
	PCE	LTE Band 71	0.149	0.362
	DTS	2.4G WLAN	0.005	0.065
	DTS	5.2G WLAN	0.062	0.353
	DTS	5.3G WLAN	0.064	0.392
	DTS	5.6G WLAN	0.069	0.402
	DTS	5.8G WLAN	0.081	0.288
	DSS	Bluetooth Note	0.389	0.389
1-g Sum SAR			0.587	1.564
Limit(W/kg)			1.6	

FCC Equipment Class	Licensed Portable Transmitter Held to Ear (PCE) Part 15 Spread Spectrum Transmitter (DSS) Digital Transmission System (DTS) Unlicensed National Information Infrastructure TX(NII)
Operating Mode:	WCDMA: RMC, HSDPA, HSUPA Release 6 LTE: QPSK, 16QAM WLAN: 802.11 a/b/g/n20/n40/ac20/ac40/ac80 Bluetooth: 4.2(GFSK +π/4DQPSK+8DPSK)
Antenna Specification:	GSM/WCDMA/LTE: PIFA Antenna Bluetooth: PIFA Antenna WLAN: PIFA Antenna
SIM Card	Support dual-SIM, dual standby, the multiple SIM card with two lines cannot transmitting at the same time

Note:
1. The dual SIM card mobile has 2 SIM slots and supports dual SIM dual standby. The WWAN radio transmission will be enabled by either one SIM at a time (Single active)
3. After pre-scan two SIM cards power, we found test result of the SIM1 was the worse, so we chose SIM1 card to perform all tests.
4. The EUT battery must be fully charged and checked periodically during the test to ascertain uniform power

1.2 Test Environment

Ambient conditions in the SAR laboratory:

Items	Required
Temperature (℃)	18-25
Humidity (%RH)	30-70

1.3 Test Factory

ShenZhen STS Test Services Co.,Ltd.

A 1/F, Building B, Zhuoke Science Park, No.190 Chongqing Road, HepingShequ, Fuyong Sub-District, Bao'an District, Shenzhen, Guang Dong, China

FCC test Firm Registration No.: 625569

IC Registration No.: 12108A

A2LA Certificate No.: 4338.01

2. Test Standards and Limits

No.	Identity	Document Title
1	47 CFR Part 2	Frequency Allocations and Radio Treaty Matters; General Rules and Regulations
2	ANSI/IEEE Std. C95.1-1992	IEEE Standard for Safety Levels with Respect to Human Exposure to Radio Frequency Electromagnetic Fields, 3 kHz to 300 GHz
3	IEEE Std. 1528-2013	Recommended Practice for Determining the Peak Spatial-Average Specific Absorption Rate (SAR) in the Human Head from Wireless Communications Devices: Measurement Techniques
4	FCC KDB 447498 D01 v06	Mobile and Portable Device RF Exposure Procedures and Equipment Authorization Policies
5	FCC KDB 865664 D01 v01r04	SAR Measurement 100 MHz to 6 GHz
6	FCC KDB 865664 D02 v01r02	RF Exposure Reporting
7	FCC KDB 941225 D01 v03r01	SAR Measurement Procedures for 3G Devices
8	FCC KDB 941225 D05 v02r05	SAR for LTE Devices
9	FCC KDB 941225 D06 v02r01	Hotspot Mode SAR
10	FCC KDB 648474 D04 v01r03	SAR Evaluation Considerations for Wireless Handsets
11	FCC KDB 248227 D01 Wi-Fi SAR v02r02	SAR Considerations for 802.11 Devices
12	FCC KDB 643646 D001	SAR Test Reduction Considerations for Occupational PTT Radios
13	Health Canada's Safety Code 6	Limits of Human Exposure to Radio frequency Electromagnetic Energy in the Frequency Range from 3KHz to 300 GHz - Safety Code 6 (2009)
14	RSS 102 Issue 5,March 2015	Radio Frequency (RF) Exposure Compliance of Radio communication Apparatus (All Frequency Bands)
15	IEC/IEEE 62209-1528:2020	Measurement procedure for the assessment of specific absorption rate of human exposure to radio frequency fields from hand-held and body-mounted wireless communication devices – Part 1528: Human models, instrumentation, and procedures (Frequency range of 4 MHz to 10 GHz)

(A). Limits for Occupational/Controlled Exposure (W/kg)

Whole-Body	Partial-Body	Hands, Body Backs, Feet and Ankles
0.4	8.0	20.0

(B). Limits for General Population/Uncontrolled Exposure (W/kg)

Whole-Body	Partial-Body	Hands, Body Backs, Feet and Ankles
0.08	1.6	4.0

NOTE: Whole-Body SAR is averaged over the entire body, partial-body SAR is averaged over any 1 gram of tissue defined as a tissue volume in the shape of a cube. SAR for hands, wrists, feet and ankles is averaged over any 10 grams of tissue defined as a tissue volume in the shape of a cube.

Population/Uncontrolled Environments:

Are defined as locations where there is the exposure of individuals who have no knowledge or control of their exposure.

Occupational/Controlled Environments:

Are defined as locations where there is exposure that may be incurred by people who are aware of the potential for exposure, (i.e. as a result of employment or occupation).

NOTE
GENERAL POPULATION/UNCONTROLLED EXPOSURE
PARTIAL BODY LIMIT
1.6 W/kg

3. SAR Measurement System

3.1 Definition of Specific Absorption Rate (SAR)

SAR is related to the rate at which energy is absorbed per unit mass in an object exposed to a radio field. The SAR distribution in a biological body is complicated and is usually carried out by experimental techniques or numerical modeling. The standard recommends limits for two tiers of groups, occupational/controlled and general population/uncontrolled, based on a person's awareness and ability to exercise control over his or her exposure. In general, occupational/controlled exposure limits are higher than the limits for general population/uncontrolled.
The SAR definition is the time derivative (rate) of the incremental energy (dW) absorbed by (dissipated in) an incremental mass (dm) contained in a volume element (dv) of a given density (ρ). The equation description is as below:

$$\mathbf{SAR} = \frac{d}{dt}\left(\frac{dW}{dm}\right) = \frac{d}{dt}\left(\frac{dW}{\rho dv}\right)$$

SAR is expressed in units of Watts per kilogram (W/kg) SAR measurement can be related to the electrical field in the tissue by

$$\mathbf{SAR} = \frac{\sigma E^2}{\rho}$$

Where: σ is the conductivity of the tissue,
ρ is the mass density of the tissue and E is the RMS electrical field strength.

3.2 SAR System

MVG SAR System Diagram:

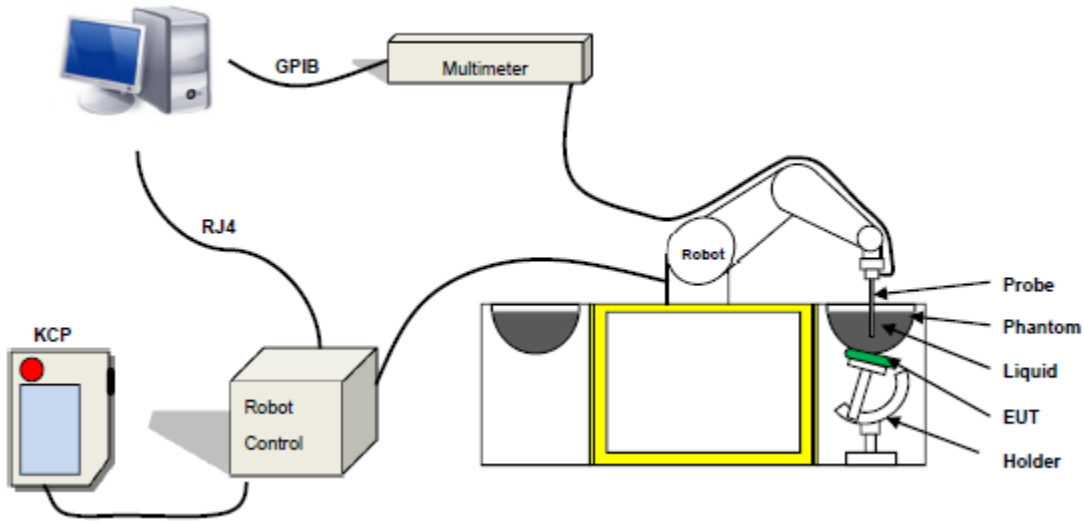

COMOSAR is a system that is able to determine the SAR distribution inside a phantom of human being according to different standards. The COMOSAR system consists of the following items:

- Main computer to control all the system
- 6 axis robot
- Data acquisition system
- Miniature E-field probe
- Phone holder
- Head simulating tissue

The following figure shows the system.

The EUT under test operating at the maximum power level is placed in the phone holder, under the phantom, which is filled with head simulating liquid. The E-Field probe measures the electric field inside the phantom. The Open SAR software computes the results to give a SAR value in a 1g or 10g mass.

3.2.1 Probe

For the measurements the Specific Dosimetric E-Field Probe SN 07/21 EPGO352 with following specifications is used

- Probe Length: 330 mm
- Length of Individual Dipoles: 2 mm
- Maximum external diameter: 8 mm
- Probe Tip External Diameter: 2.5 mm
- Distance between dipole/probe extremity: 1 mm
- Dynamic range: 0.01-100 W/kg
- Probe linearity: 3%
- Axial Isotropy: < 0.10 dB
- Spherical Isotropy: < 0.10 dB
- Calibration range: 150 MHz to 6 GHz for head & body simulating liquid.
- Angle between probe axis (evaluation axis) and surface normal line: less than 30°

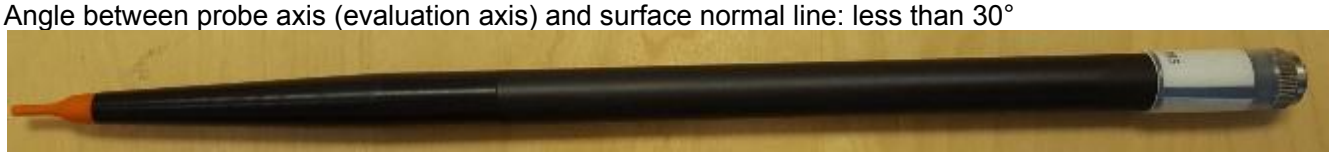

Figure 1-MVG COMOSAR Dosimetric E field Dipole

3.2.2 Phantom

For the measurements the Specific Anthropomorphic Mannequin (SAM) defined by the IEEE SCC-34/SC2 group is used. The phantom is a polyurethane shell integrated in a wooden table. The thickness of the phantom amounts to 2mm +/- 0.2mm. It enables the dosimetric evaluation of left and right phone usage and includes an additional flat phantom part for the simplified performance check. The phantom set-up includes a cover, which prevents the evaporation of the liquid.

SN 32/14 SAM115

SN 32/14 SAM116

3.2.3 Device Holder

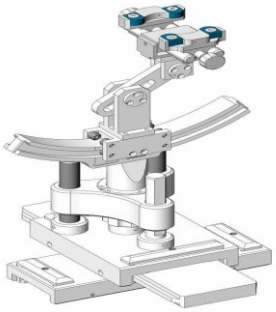

The SAR in the phantom is approximately inversely proportional to the square of the distance between the source and the liquid surface. For a source at 5 mm distance, a positioning uncertainty of ± 0.5 mm would produce a SAR uncertainty of ± 20 %. Accurate device positioning is therefore crucial for accurate and repeatable measurements. The positions in which the devices must be measured are defined by the standards.4. Tissue Simulating Liquids

4. Tissue Simulating Liquids

4.1 Simulating Liquids Parameter Check

The head tissue dielectric parameters recommended by the IEEE SCC-34/SC-2 in P1528 have been incorporated in the following table. These head parameters are derived from planar layer models simulating the highest expected SAR for the dielectric properties and tissue thickness variations in a human head. Other head and body tissue parameters that have not been specified in P1528 are derived from the tissue dielectric parameters computed from the 4-Cole-Cole equations described in Reference [12] and extrapolated according to the head parameters specified in P1528.

Head Tissue

Frequency (MHz)	cellulose	DGBE	HEC	NaCl	Preventol	Sugar	X100	Water	Conductivity	Permittivity
	%	%	%	%	%	%	%	%	σ	εr
750	0.2	/	/	1.4	0.2	57.0	/	41.1	0.89	41.9
835	0.2	/	/	1.4	0.2	57.9	/	40.3	0.90	41.5
900	0.2	/	/	1.4	0.2	57.9	/	40.3	0.97	41.5
1800	/	44.5	/	0.3	/	/	30.45	55.2	1.4	40.0
1900	/	44.5	/	0.3	/	/	30.45	55.2	1.4	40.0
2000	/	44.5	/	0.3	/	/	/	55.2	1.4	40.0
2450	/	44.9	/	0.1	/	/	/	55.0	1.80	39.2
2600	/	45.0	/	0.1	/	/	/	54.9	1.96	39.0

Body Tissue

Frequency (MHz)	cellulose	DGBE	HEC	NaCl	Preventol	Sugar	X100	Water	Conductivity	Permittivity
	%	%	%	%	%	%	%	%	σ	εr
750	0.2	/	/	0.9	0.1	47.2	/	51.7	0.96	55.5
835	0.2	/	/	0.9	0.1	48.2	/	50.8	0.97	55.2
900	0.2	/	/	0.9	0.1	48.2	/	50.8	1.05	55.0
1800	/	29.4	/	0.4	/	/	30.45	70.2	1.52	53.3
1900	/	29.4	/	0.4	/	/	30.45	70.2	1.52	53.3
2000	/	29.4	/	0.4	/	/	/	70.2	1.52	53.3
2450	/	31.3	/	0.1	/	/	/	68.6	1.95	52.7
2600	/	31.7	/	0.1	/	/	/	68.2	2.16	52.3

Tissue dielectric parameters for head and body phantoms				
Frequency	εr		σ S/m	
	Head	Body	Head	Body
300	45.3	58.2	0.87	0.92
450	43.5	56.7	0.87	0.94
900	41.5	55.0	0.97	1.05
1450	40.5	54.0	1.20	1.30
1800	40.0	53.3	1.40	1.52
2450	39.2	52.7	1.80	1.95
3000	38.5	52.0	2.40	2.73
5800	35.3	48.2	5.27	6.00

LIQUID MEASUREMENT RESULTS

Date	Ambient		Simulating Liquid		Parameters	Target	Measured	Deviation %	Limited %
	Temp. [°C]	Humidity %	Frequency	Temp. [°C]					
2021-09-14	24.2	51	673 MHz	23.9	Permittivity	42.31	43.66	3.19	±5
					Conductivity	0.88	0.88	0.00	±5
2021-09-14	24.2	51	688 MHz	23.9	Permittivity	42.23	43.10	2.06	±5
					Conductivity	0.89	0.88	-1.12	±5
2021-09-14	24.2	51	704 MHz	23.9	Permittivity	42.15	41.18	-2.30	±5
					Conductivity	0.89	0.89	0.00	±5
2021-09-14	24.2	51	711 MHz	23.9	Permittivity	42.11	41.79	-0.76	±5
					Conductivity	0.89	0.87	-2.25	±5
2021-09-14	24.2	51	750 MHz	23.9	Permittivity	41.9	42.93	2.46	±5
					Conductivity	0.89	0.91	2.25	±5
2021-09-14	24.2	51	782 MHz	23.9	Permittivity	41.75	41.73	-0.05	±5
					Conductivity	0.89	0.89	0.00	±5
2021-09-14	24.2	51	793 MHz	23.9	Permittivity	41.7	42.26	1.34	±5
					Conductivity	0.9	0.88	-2.22	±5
2021-09-14	24.2	51	831.5 MHz	23.9	Permittivity	41.5	41.50	0.00	±5
					Conductivity	0.9	0.90	0.00	±5
2021-09-14	24.2	51	835 MHz	23.9	Permittivity	41.5	42.03	1.28	±5
					Conductivity	0.9	0.88	-2.22	±5
2021-09-14	24.2	51	841.5 MHz	23.9	Permittivity	41.5	41.13	-0.89	±5
					Conductivity	0.91	0.89	-2.20	±5
2021-09-14	24.2	51	844 MHz	23.9	Permittivity	41.5	41.86	0.87	±5
					Conductivity	0.91	0.92	1.10	±5
2021-09-14	24.2	51	846.6 MHz	23.9	Permittivity	41.5	42.73	2.96	±5
					Conductivity	0.91	0.89	-2.20	±5
2021-09-14	24.2	51	900 MHz	23.9	Permittivity	41.5	42.84	3.23	±5
					Conductivity	0.97	0.95	-2.06	±5
2021-09-15	23.6	42	1720 MHz	23.2	Permittivity	40.11	39.51	-1.50	±5
					Conductivity	1.35	1.35	0.00	±5
2021-09-15	23.6	42	1732.5 MHz	23.2	Permittivity	40.1	40.20	0.25	±5
					Conductivity	1.36	1.32	-2.94	±5
2021-09-15	23.6	42	1740 MHz	23.2	Permittivity	40.09	39.36	-1.82	±5
					Conductivity	1.37	1.40	2.19	±5

2021-09-15	23.6	42	1800 MHz	23.2	Permittivity	40	39.92	-0.20	±5
					Conductivity	1.4	1.45	3.57	±5
2021-09-15	23.6	42	1852.9 MHz	23.2	Permittivity	40	39.93	-0.18	±5
					Conductivity	1.4	1.43	2.14	±5
2021-09-15	23.6	42	1860 MHz	23.2	Permittivity	40	38.58	-3.55	±5
					Conductivity	1.4	1.41	0.71	±5
2021-09-15	23.6	42	1880 MHz	23.2	Permittivity	40	38.39	-4.03	±5
					Conductivity	1.4	1.43	2.14	±5
2021-09-15	23.6	42	1900 MHz	23.2	Permittivity	40	38.49	-3.78	±5
					Conductivity	1.4	1.39	-0.71	±5
2021-09-15	23.6	42	1905 MHz	23.2	Permittivity	40	40.23	0.57	±5
					Conductivity	1.4	1.40	0.00	±5
2021-09-29	24.2	53	2437 MHz	23.9	Permittivity	39.22	40.12	2.29	±5
					Conductivity	1.79	1.78	-0.56	±5
2021-09-29	24.2	53	2450 MHz	23.9	Permittivity	39.2	39.73	1.35	±5
					Conductivity	1.8	1.79	-0.56	±5
2021-09-29	24.2	53	2510 MHz	23.9	Permittivity	39.12	40.60	3.78	±5
					Conductivity	1.87	1.89	1.07	±5
2021-09-29	24.2	53	2535 MHz	23.9	Permittivity	39.09	39.58	1.25	±5
					Conductivity	1.89	1.91	1.06	±5
2021-09-29	24.2	53	2560 MHz	23.9	Permittivity	39.06	38.88	-0.46	±5
					Conductivity	1.92	1.96	2.08	±5
2021-09-29	24.2	53	2593 MHz	23.9	Permittivity	39.02	38.22	-2.05	±5
					Conductivity	1.96	2.00	2.04	±5
2021-09-29	24.2	53	2600 MHz	23.9	Permittivity	39	38.42	-1.49	±5
					Conductivity	1.96	1.10	-43.88	±5
2021-10-7	22.4	55	5200 MHz	22.1	Permittivity	36	35.73	-0.75	±5
					Conductivity	4.66	4.69	0.64	±5
2021-10-7	22.4	55	5240 MHz	22.1	Permittivity	35.96	36.04	0.22	±5
					Conductivity	4.7	4.67	-0.64	±5
2021-10-7	22.4	55	5266MHz	22.1	Permittivity	35.96	36.08	0.33	±5
					Conductivity	4.7	4.62	-1.70	±5
2021-10-7	22.4	55	5300 MHz	22.1	Permittivity	35.8	35.06	-2.07	±5
					Conductivity	4.86	4.75	-2.26	±5
2021-10-7	22.4	55	5580 MHz	22.1	Permittivity	35.58	35.36	-0.62	±5
					Conductivity	5.04	5.03	-0.20	±5
2021-10-7	22.4	55	5600 MHz	22.1	Permittivity	35.5	36.16	1.86	±5
					Conductivity	5.07	5.02	-0.99	±5

2021-10-7	22.4	55	5745MHz	22.1	Permittivity	35.37	36.06	1.95	±5
					Conductivity	5.21	5.33	2.30	±5
2021-10-7	22.4	55	5800MHz	22.1	Permittivity	35.3	35.32	0.06	±5
					Conductivity	5.27	5.21	-1.14	±5

5. SAR System Validation

5.1 Validation System

Each MVG system is equipped with one or more system validation kits. These units, together with the predefined measurement procedures within the MVG software, enable the user to conduct the system performance check and system validation. System kit includes a dipole, and dipole device holder.

The system check verifies that the system operates within its specifications. It's performed daily or before every SAR measurement. The system check uses normal SAR measurement in the flat section of the phantom with a matched dipole at a specified distance. The system validation setup is shown as below.

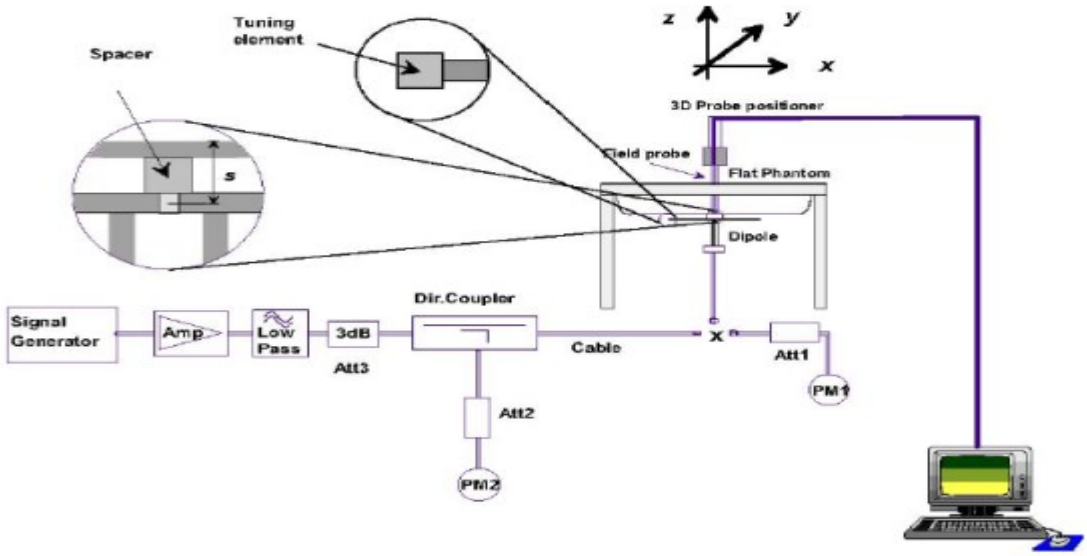

5.2 Validation Result

Comparing to the original SAR value provided by MVG, the validation data should be within its specification of 10 %.

Date	Freq.	Power	Tested Value	Normalized SAR	Target SAR	Tolerance	Limit
	(MHz)	(mW)	(W/Kg)	(W/kg)	1g(W/kg)	(%)	(%)
2021-09-14	750	100	0.873	8.48	8.49	-0.12	10
2021-09-14	835	100	0.942	9.74	9.56	1.88	10
2021-09-14	900	100	1.096	10.92	10.90	0.18	10
2021-09-15	1800	100	3.815	39.07	38.40	1.74	10
2021-09-15	1900	100	3.866	40.62	39.70	2.32	10
2021-09-29	2450	100	5.176	53.88	52.40	2.82	10
2021-09-29	2600	100	5.739	53.77	55.30	-2.77	10
2021-10-7	5200	100	15.661	159.80	159.00	0.50	10
2021-10-7	5300	100	17.140	165.89	166.40	-0.31	10
2021-10-7	5600	100	17.274	179.28	173.80	3.15	10
2021-10-7	5800	100	18.438	179.35	181.20	-1.02	10

Note:

1. The tolerance limit of System validation ±10%.
2. The dipole input power (forward power) was 100 mW.
3. The results are normalized to 1 W input power.

6. SAR Evaluation Procedures

The procedure for assessing the average SAR value consists of the following steps:
The following steps are used for each test position

- Establish a call with the maximum output power with a base station simulator. The connection between the mobile and the base station simulator is established via air interface
- Measurement of the local E-field value at a fixed location. This value serves as a reference value for calculating a possible power drift.
- Measurement of the SAR distribution with a grid of 8 to 16mm * 8 to16 mm and a constant distance to the inner surface of the phantom. Since the sensors cannot directly measure at the inner phantom surface, the values between the sensors and the inner phantom surface are extrapolated. With these values the area of the maximum SAR is calculated by an interpolation scheme.
- Around this point, a cube of 30 * 30 * 30 mm or 32 * 32 * 32 mm is assessed by measuring 5 or 8 * 5 or 8*4 or 5 mm. With these data, the peak spatial-average SAR value can be calculated.

➢ Area Scan& Zoom Scan

First Area Scan is used to locate the approximate location(s) of the local peak SAR value(s). The measurement grid within an Area Scan is defined by the grid extent, grid step size and grid offset. Next, in order to determine the EM field distribution in a three-dimensional spatial extension, Zoom Scan is required. The Zoom Scan is performed around the highest E-field value to determine the averaged SAR-distribution over 10 g. Area scan and zoom scan resolution setting follows KDB 865664 D01 quoted below.
When the 1-g SAR of the highest peak is within 2 dB of the SAR limit, additional zoom scans are required for other peaks within 2 dB of the highest peak that have not been included in any zoom scan to ensure there is no increase in SAR.

7. EUT Test Position

This EUT was tested in Front Face and Rear Face.
Body-worn Position Conditions:
Body-worn accessory exposure is typically related to voice mode operations when handsets are carried in body-worn accessories. The body-worn accessory procedures in KDB Publication 447498 D01 should be used to test for body-worn accessory SAR compliance, without a headset connected to it. When the same wireless transmission configuration is used for testing body-worn accessory and hotspot mode SAR, respectively, in voice and data mode, SAR results for the most conservative *test separation distance* configuration may be used to support both SAR conditions. When the *reported* SAR for a body-worn accessory, measured without a headset connected to the handset, is > 1.2 W/kg, the highest *reported* SAR configuration for that wireless mode and frequency band should be repeated for the body-worn accessory with a headset attached to the handset.

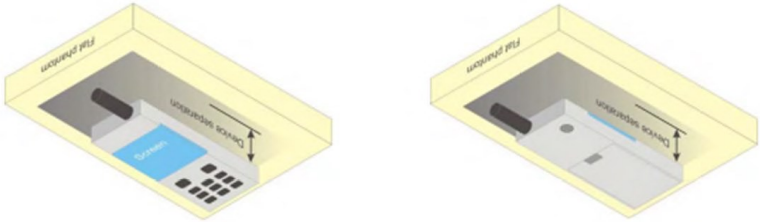

8. Uncertainty

8.1 Measurement Uncertainty

The following measurement uncertainty levels have been estimated for tests performed on the EUT as specified in IEEE 1528: 2013.This uncertainty represents an expanded uncertainty expressed at approximately the 95% confidence level using a coverage factor of k=2.

Uncertainty Component	Tol (+- %)	Prob. Dist.	Div.	Ci (1g)	Ci (10g)	1g Ui (+-%)	10g Ui (+-%)	vi
Measurement System								
Probe calibration	5.831	N	1	1	1	5.83	5.83	∞
Axial Isotropy	0.695	R	$\sqrt{3}$	√0.5	√0.5	0.28	0.28	∞
Hemispherical Isotropy	1.045	R	$\sqrt{3}$	√0.5	√0.5	0.43	0.43	∞
Boundary effect	1.0	R	$\sqrt{3}$	1	1	0.58	0.58	∞
Linearity	0.685	R	$\sqrt{3}$	1	1	0.40	0.40	∞
System detection limits	1.0	R	$\sqrt{3}$	1	1	0.58	0.58	∞
Modulation response	3.0	R	$\sqrt{3}$	1	1	1.73	1.73	∞
Readout Electronics	0.021	N	1	1	1	0.021	0.021	∞
Response Time	0	R	$\sqrt{3}$	1	1	0	0	∞
Integration Time	1.4	R	$\sqrt{3}$	1	1	0.81	0.81	∞
RF ambient conditions-Noise	3.0	R	$\sqrt{3}$	1	1	1.73	1.73	∞
RF ambient conditions-reflections	3.0	R	$\sqrt{3}$	1	1	1.73	1.73	∞
Probe positioner mechanical tolerance	1.4	R	$\sqrt{3}$	1	1	0.81	0.81	∞
Probe positioning with respect to phantom shell	1.4	R	$\sqrt{3}$	1	1	0.81	0.81	∞
Post-processing	2.3	R	$\sqrt{3}$	1	1	1.33	1.33	∞
Test sample Related								
Test sample positioning	2.6	N	1	1	1	2.6	2.6	∞
Device holder uncertainty	3	N	1	1	1	3	3	∞
SAR drift measurement	5	R	$\sqrt{3}$	1	1	2.89	2.89	∞
SAR scaling	5	R	$\sqrt{3}$	1	1	2.89	2.89	∞
Phantom and tissue parameters								
Phantom uncertainty（shape and thickness uncertainty）	4	R	$\sqrt{3}$	1	1	2.31	2.31	∞
Uncertainty in SAR correction for deviations in permittivity and conductivity	1.9	N	1	1	0.84	1.90	1.60	∞
Liquid conductivity （temperature uncertainty）	2.5	R	$\sqrt{3}$	0.78	0.71	1.13	1.02	∞
Liquid conductivity （measured）	4	N	1	0.78	0.71	3.12	2.84	M
Liquid permittivity （temperature uncertainty）	2.5	R	$\sqrt{3}$	0.23	0.26	0.33	0.38	∞
Liquid permittivity （measured）	5	N	1	0.23	0.26	1.15	1.30	M
Combined Standard Uncertainty		RSS				9.79	9.59	
Expanded Uncertainty (95% Confidence interval)		K=2				19.58	19.18	

8.2 System validation Uncertainty

Uncertainty Component	Tol (+- %)	Prob. Dist.	Div.	Ci (1g)	Ci (10g)	1g Ui (+-%)	10g Ui (+-%)	vi
Measurement System								
Probe calibration	5.831	N	1	1	1	5.83	5.83	∞
Axial Isotropy	0.695	R	$\sqrt{3}$	1	1	0.40	0.40	∞
Hemispherical Isotropy	1.045	R	$\sqrt{3}$	0	0	0.00	0.00	∞
Boundary effect	1.0	R	$\sqrt{3}$	1	1	0.58	0.58	∞
Linearity	0.685	R	$\sqrt{3}$	1	1	0.40	0.40	∞
System detection limits	1.0	R	$\sqrt{3}$	1	1	0.58	0.58	∞
Modulation response	3.0	R	$\sqrt{3}$	0	0	0.00	0.00	∞
Readout Electronics	0.021	N	1	1	1	0.021	0.021	∞
Response Time	0.0	R	$\sqrt{3}$	0	0	0.00	0.00	∞
Integration Time	1.4	R	$\sqrt{3}$	0	0	0.00	0.00	∞
RF ambient conditions-Noise	3.0	R	$\sqrt{3}$	1	1	1.73	1.73	∞
RF ambient conditions-reflections	3.0	R	$\sqrt{3}$	1	1	1.73	1.73	∞
Probe positioner mechanical tolerance	1.4	R	$\sqrt{3}$	1	1	0.81	0.81	∞
Probe positioning with respect to phantom shell	1.4	R	$\sqrt{3}$	1	1	0.81	0.81	∞
Post-Processing	2.3	R	$\sqrt{3}$	1	1	1.33	1.33	∞
System validation source								
Deviation of experimental dipole from numerical dipole	5.0	N	1	1	1	5.00	5.00	∞
Input power and SAR drift measurement	5.0	R	$\sqrt{3}$	1	1	2.89	2.89	∞
Other source contribution Uncertainty	2.0	R	$\sqrt{3}$	1	1	1.15	1.15	∞
Phantom and set-up								
Phantom uncertainty（shape and thickness uncertainty）	4.0	R	$\sqrt{3}$	1	1	2.31	2.31	∞
Uncertainty in SAR correction for deviations in permittivity and conductivity	1.9	N	1	1	0.84	1.90	1.60	∞
Liquid conductivity（temperature uncertainty）	2.5	R	$\sqrt{3}$	0.78	0.71	1.13	1.02	∞
Liquid conductivity（measured）	4	N	1	0.78	0.71	3.12	2.84	M
Liquid permittivity（temperature uncertainty）	2.5	R	$\sqrt{3}$	0.23	0.26	0.33	0.38	∞
Liquid permittivity（measured）	5	N	1	0.23	0.26	1.15	1.30	M
Combined Standard Uncertainty		RSS				9.718	9.517	
Expanded Uncertainty (95% Confidence interval)		K=2				19.44	19.04	

9. Conducted Power Measurement

9.1 Test Result

WCDMA

Band	WCDMA Band II			WCDMA Band V			WCDMA Band IV		
Channel	9262	9400	9538	4132	4183	4233	1312	1413	1513
Frequency (MHz)	1852.4	1880	1907.6	826.4	836.6	846.6	1712.6	1740	1752.4
RMC 12.2Kbps	24.07	23.22	23.78	23.22	23.91	24.14	23.44	23.85	24.35
HSDPA Subtest-1	20.82	19.8	20.6	19.86	20.46	20.68	20.41	20.41	21.03
HSDPA Subtest-2	20.46	20.12	20.96	20.52	20.76	21.02	20.51	20.72	21.13
HSDPA Subtest-3	20.84	19.97	20.72	20.09	20.45	20.67	20.02	20.38	20.99
HSDPA Subtest-4	20.48	19.61	20.18	20.07	20.64	20.53	20.4	20.79	21.13
HSUPA Subtest-1	20.79	19.94	20.23	20.04	20.79	20.85	19.88	20.25	21.12
HSUPA Subtest-2	20.44	19.92	20.57	19.86	20.29	20.8	20.13	20.25	20.88
HSUPA Subtest-3	20.98	20.16	20.7	20.03	20.28	21.02	20.38	20.3	20.62
HSUPA Subtest-4	20.44	20.14	20.19	19.52	20.29	20.51	19.85	20.78	20.87
HSUPA Subtest-5	20.79	19.96	20.71	19.57	20.57	20.84	20.38	20.3	20.88

According to 3GPP 25.101 sub-clause 6.2.2, the maximum output power is allowed to be reduced by following the table.

Table 6.1A: UE maximum output power with HS-DPCCH and E-DCH

UE Transmit Channel Configuration	CM(db)	MPR(db)
For all combinations of ,DPDCH,DPCCH HS-DPDCH,E-DPDCH and E-DPCCH	0≤ CM≤3.5	MAX(CM-1,0)
Note: CM=1 for βc/βd=12/15, βhs/ βc=24/15.For all other combinations of DPDCH, DPCCH, HS-DPCCH, E-DPDCH and E-DPCCH the MPR is based on the relative CM difference.		

The device supports MPR to solve linearity issues (ACLR or SEM) due to the higher peak-to average ratios (PAR) of the HSUPA signal. This prevents saturating the full range of the TX DAC inside of device and provides a reduced power output to the RF transceiver chip according to the Cubic Metric (a function of the combinations of DPDCH, DPCCH, HS-DPCCH, E-DPDCH and E-DPCCH).

When E-DPDCH channels are present the beta gains on those channels are reduced firsts to try to get the power under the allowed limit. If the beta gains are lowered as far as possible, then a hard limiting is applied at the maximum allowed level.

The SW currently recalculates the cubic metric every time the beta gains on the E-DPDCH are reduced. The cubic metric will likely get lower each time this is done .However, there is no reported reduction of maximum output power in the HSUPA mode since the device also provides a compensation for the power back-off by increasing the gain of TX_AGC in the transceiver (PA) device.

The end effect is that the DUT output power is identical to the case where there is no MPR in the device.

2.4G WLAN

Mode	Channel Number	Frequency (MHz)	Average Power (dBm)
802.11b	1	2412	15.41
	6	2437	16.47
	11	2462	13.93
802.11g	1	2412	17.93
	6	2437	19.03
	11	2462	18.68
802.11n(HT 20)	1	2412	17.86
	6	2437	18.62
	11	2462	18.70
802.11n(HT 40)	3	2422	19.24
	6	2437	19.49
	9	2452	19.51

Bluetooth

Mode	Channel Number	Frequency (MHz)	Average Power (dBm)
GFSK(1Mbps)	0	2402	8.76
	39	2441	9.68
	78	2480	8.05
π/4-DQPSK(2Mbps)	0	2402	8.40
	39	2441	9.10
	78	2480	7.83
8DPSK(3Mbps)	0	2402	8.64
	39	2441	9.40
	78	2480	8.01

BLE

Mode	Channel Number	Frequency (MHz)	Average Power (dBm)
GFSK(1Mbps)	0	2402	-1.57
	19	2440	-1.17
	39	2480	-2.30
GFSK(2Mbps)	0	2402	-1.50
	19	2440	-1.11
	39	2480	-2.09

WLAN (5.2Gband)

5.2G WLAN				
Mode	Channel Number	Frequency (MHz)	Output Power (dBm)	Output Power (mW)
802.11a20	36	5180	9.85	9.66
	40	5200	10.02	10.05
	48	5240	10.13	10.30
802.11 n-HT20	36	5180	9.51	8.93
	40	5200	9.71	9.35
	48	5240	9.79	9.53
802.11 n-HT40	38	5190	10.52	11.27
	46	5230	10.58	11.43
802.11ac-VHT20	36	5180	9.61	9.14
	40	5200	9.78	9.51
	48	5240	9.9	9.77
802.11ac-VHT40	38	5190	10.51	11.25
	46	5230	10.63	11.56
802.11ac-VHT80	42	5210	10.53	11.30

WLAN (5.3Gband)

5.3G WLAN				
Mode	Channel Number	Frequency (MHz)	Output Power (dBm)	Output Power (mW)
802.11a20	52	5260	8.34	6.82
	60	5300	8.28	6.73
	64	5320	7.91	6.18
802.11 n-HT20	52	5260	8	6.31
	60	5300	7.94	6.22
	64	5320	7.58	5.73
802.11 n-HT40	54	5270	8.92	7.80
	62	5310	8.71	7.43
802.11ac-VHT20	52	5260	8.09	6.44
	60	5300	8.01	6.32
	64	5320	7.67	5.85
802.11ac-VHT40	54	5270	8.75	7.50
	62	5310	8.48	7.05
802.11ac-VHT80	58	5290	8.72	7.45

WLAN (5.6Gband)

5.6G WLAN				
Mode	Channel Number	Frequency (MHz)	Output Power (dBm)	Output Power (mW)
802.11a20	100	5500	8.76	7.52
	116	5580	9.88	9.73
	140	5700	8.10	6.46
802.11 n-HT20	100	5500	8.51	7.10
	116	5580	9.62	9.16
	140	5700	7.78	6.00
802.11 n-HT40	102	5510	9.75	9.44
	110	5550	10.66	11.64
	134	5670	10.43	11.04
802.11ac-VHT20	100	5500	8.67	7.36
	116	5580	9.75	9.44
	140	5700	7.84	6.08
802.11ac-VHT40	102	5510	9.54	8.99
	110	5550	10.49	11.19
	134	5670	9.20	8.32
802.11ac-VHT80	106	5530	10.01	10.02
	122	5610	10.11	10.26

WLAN (5.8Gband)

5.8G WLAN				
Mode	Channel Number	Frequency (MHz)	Output Power (dBm)	Output Power (mW)
802.11a20	149	5745	8.09	6.44
	157	5785	6.83	4.82
	165	5825	6.06	4.04
802.11 n-HT20	149	5745	7.86	6.11
	157	5785	6.60	4.57
	165	5825	5.68	3.70
802.11 n-HT40	151	5755	8.74	7.48
	159	5795	7.29	5.36
802.11ac-VHT20	149	5745	7.60	5.75
	157	5785	6.52	4.49
	165	5825	5.93	3.92
802.11ac-VHT40	151	5755	8.52	7.11
	159	5795	7.18	5.22
802.11ac-VHT80	155	5775	8.00	6.31

LTE Conducted Power

General Note:

1. Anritsu CMW500 base station simulator was used to setup the connection with EUT; the frequency band, channel bandwidth, RB allocation configuration, modulation type are set in the base station simulator to configure EUT transmitting at maximum power and at different configurations which are requested to be reported to FCC, for conducted power measurement and SAR testing.
2. Per KDB 941225 D05, when a properly configured base station simulator is used for the SAR and power measurements, spectrum plots for each RB allocation and offset configuration is not required.
3. Per KDB 941225 D05, start with the largest channel bandwidth and measure SAR for QPSK with 1 RB allocation, using the RB offset and required test channel combination with the highest maximum output power for RB offsets at the upper edge, middle and lower edge of each required test channel.
4. Per KDB 941225 D05, 50% RB allocation for QPSK SAR testing follows 1RB QPSK allocation procedure.
5. Per KDB 941225 D05, For QPSK with 100% RB allocation, SAR is not required when the highest maximum output power for 100 % RB allocation is less than the highest maximum output power in 50% and 1 RB allocations and the highest reported SAR for 1 RB and 50% RB allocation are ≤ 0.8 W/kg. Otherwise, SAR is measured for the highest output power channel; and if the reported SAR is > 1.45 W/kg, the remaining required test channels must also be tested.
6. Per KDB 941225 D05, 16QAM output power for each RB allocation configuration is > not ½ dB higher than the same configuration in QPSK and the reported SAR for the QPSK configuration is ≤ 1.45 W/kg; Per KDB 941225 D05, 16QAM SAR testing is not required.
7. Per KDB 941225 D05, Smaller bandwidth output power for each RB allocation configuration is > not ½ dB higher than the same configuration in the largest supported bandwidth, and the reported SAR for the largest supported bandwidth is ≤ 1.45 W/kg; Per KDB 941225 D05, smaller bandwidth SAR testing is not required.

FCC_LTE_4G_Band_2

Test Band: 2 _ 1.4MHz Bandwidth												
Modulation	RB Allocation		Conducted Power (dBm)			Antenna gain		EIRP(dBm)			Limit	Verdict
	Size	Offset	LCH	MCH	HCH	(dBd)	(dBi)	LCH	MCH	HCH	(dBm)	
QPSK	1	0	21.53	20.52	20.95	/	0.37	21.9	20.89	21.32	33.01	PASS
		2	21.61	20.54	20.99	/	0.37	21.98	20.91	21.36	33.01	PASS
		5	21.54	20.36	20.97	/	0.37	21.91	20.73	21.34	33.01	PASS
	3	0	21.48	20.51	20.92	/	0.37	21.85	20.88	21.29	33.01	PASS
		2	21.56	20.51	20.98	/	0.37	21.93	20.88	21.35	33.01	PASS
		3	21.48	20.35	20.88	/	0.37	21.85	20.72	21.25	33.01	PASS
	6	0	20.52	19.45	19.97	/	0.37	20.89	19.82	20.34	33.01	PASS
16QAM	1		20.66	19.72	19.98	/	0.37	21.03	20.09	20.35	33.01	PASS
		2	20.69	19.77	20.04	/	0.37	21.06	20.14	20.41	33.01	PASS
		5	20.64	19.57	19.97	/	0.37	21.01	19.94	20.34	33.01	PASS
	3	0	20.66	19.55	20.12	/	0.37	21.03	19.92	20.49	33.01	PASS
		2	20.74	19.54	20.22	/	0.37	21.11	19.91	20.59	33.01	PASS
		3	20.63	19.4	20.12	/	0.37	21	19.77	20.49	33.01	PASS
	6	0	19.55	18.54	19.05	/	0.37	19.92	18.91	19.42	33.01	PASS

Note:

1) dBd = dBi - 2.15

2) EIRP = Conducted output power + Antenna gain (dBi)

Test Band: 2 _ 3MHz Bandwidth												
Modulation	RB Allocation		Conducted Power (dBm)			Antenna gain		EIRP(dBm)			Limit	Verdict
	Size	Offset	LCH	MCH	HCH	(dBd)	(dBi)	LCH	MCH	HCH	(dBm)	
QPSK	1	0	21.54	20.81	20.98	/	0.37	21.91	21.18	21.35	33.01	PASS
		7	21.62	20.66	21.09	/	0.37	21.99	21.03	21.46	33.01	PASS
		14	21.38	20.25	21.02	/	0.37	21.75	20.62	21.39	33.01	PASS
	8	0	20.59	19.68	20.03	/	0.37	20.96	20.05	20.4	33.01	PASS
		4	20.56	19.57	20.06	/	0.37	20.93	19.94	20.43	33.01	PASS
		7	20.49	19.4	20.01	/	0.37	20.86	19.77	20.38	33.01	PASS
	15	0	20.52	19.49	19.98	/	0.37	20.89	19.86	20.35	33.01	PASS
16QAM	1		21.15	19.87	20.17	/	0.37	21.52	20.24	20.54	33.01	PASS
		7	21.23	19.71	20.3	/	0.37	21.6	20.08	20.67	33.01	PASS
		14	21	19.26	20.17	/	0.37	21.37	19.63	20.54	33.01	PASS
	8	0	19.8	18.78	19.02	/	0.37	20.17	19.15	19.39	33.01	PASS
		4	19.77	18.65	19.11	/	0.37	20.14	19.02	19.48	33.01	PASS
		7	19.72	18.49	19.02	/	0.37	20.09	18.86	19.39	33.01	PASS
	15	0	19.63	18.58	18.99	/	0.37	20	18.95	19.36	33.01	PASS

Note:

1) dBd = dBi - 2.15

2) EIRP = Conducted output power + Antenna gain (dBi)

Test Band: 2 _ 5MHz Bandwidth												
Modulation	RB Allocation		Conducted Power (dBm)			Antenna gain		EIRP(dBm)			Limit	Verdict
	Size	Offset	LCH	MCH	HCH	(dBd)	(dBi)	LCH	MCH	HCH	(dBm)	
QPSK	1	0	21.62	20.96	20.96	/	0.37	21.99	21.33	21.33	33.01	PASS
		13	21.58	20.56	21.09	/	0.37	21.95	20.93	21.46	33.01	PASS
		24	21.38	20.03	21	/	0.37	21.75	20.4	21.37	33.01	PASS
	12	0	20.57	19.78	19.98	/	0.37	20.94	20.15	20.35	33.01	PASS
		6	20.5	19.55	20.03	/	0.37	20.87	19.92	20.4	33.01	PASS
		13	20.39	19.23	19.98	/	0.37	20.76	19.6	20.35	33.01	PASS
	25	0	20.49	19.52	19.98	/	0.37	20.86	19.89	20.35	33.01	PASS
16QAM	1		20.79	20.28	19.86	/	0.37	21.16	20.65	20.23	33.01	PASS
		13	20.74	19.85	19.99	/	0.37	21.11	20.22	20.36	33.01	PASS
		24	20.54	19.27	19.9	/	0.37	20.91	19.64	20.27	33.01	PASS
	12	0	19.57	18.9	19.05	/	0.37	19.94	19.27	19.42	33.01	PASS
		6	19.54	18.64	19.08	/	0.37	19.91	19.01	19.45	33.01	PASS
		13	19.41	18.3	19.04	/	0.37	19.78	18.67	19.41	33.01	PASS
	25	0	19.55	18.58	19.04	/	0.37	19.92	18.95	19.41	33.01	PASS

Note:

1) dBd = dBi - 2.15

2) EIRP = Conducted output power + Antenna gain (dBi)

Test Band: 2 _ 10MHz Bandwidth												
Modulation	RB Allocation		Conducted Power (dBm)			Antenna gain		EIRP(dBm)			Limit	Verdict
	Size	Offset	LCH	MCH	HCH	(dBd)	(dBi)	LCH	MCH	HCH	(dBm)	
QPSK	1	0	21.68	21.46	20.63	/	0.37	22.05	21.83	21	33.01	PASS
		25	21.37	20.55	20.97	/	0.37	21.74	20.92	21.34	33.01	PASS
		49	21.19	19.57	21.03	/	0.37	21.56	19.94	21.4	33.01	PASS
	25	0	20.46	19.99	19.77	/	0.37	20.83	20.36	20.14	33.01	PASS
		13	20.37	19.52	19.95	/	0.37	20.74	19.89	20.32	33.01	PASS
		25	20.12	18.97	19.98	/	0.37	20.49	19.34	20.35	33.01	PASS
	50	0	20.25	19.52	19.89	/	0.37	20.62	19.89	20.26	33.01	PASS
16QAM	1		20.92	20.98	19.62	/	0.37	21.29	21.35	19.99	33.01	PASS
		25	20.58	20.1	19.97	/	0.37	20.95	20.47	20.34	33.01	PASS
		49	20.4	19.14	20.06	/	0.37	20.77	19.51	20.43	33.01	PASS
	25	0	19.54	19.12	18.91	/	0.37	19.91	19.49	19.28	33.01	PASS
		13	19.43	18.64	19.08	/	0.37	19.8	19.01	19.45	33.01	PASS
		25	19.2	18.1	19.1	/	0.37	19.57	18.47	19.47	33.01	PASS
	50	0	19.3	18.63	18.96	/	0.37	19.67	19	19.33	33.01	PASS

Note:

1) dBd = dBi - 2.15

2) EIRP = Conducted output power + Antenna gain (dBi)

Test Band: 2 _ 15MHz Bandwidth												
Modulation	RB Allocation		Conducted Power (dBm)			Antenna gain		EIRP(dBm)			Limit	Verdict
	Size	Offset	LCH	MCH	HCH	(dBd)	(dBi)	LCH	MCH	HCH	(dBm)	
QPSK	1	0	21.51	21.5	19.77	/	0.37	21.88	21.87	20.14	33.01	PASS
		38	21.27	20.5	20.78	/	0.37	21.64	20.87	21.15	33.01	PASS
		74	21.33	19.13	20.98	/	0.37	21.7	19.5	21.35	33.01	PASS
	36	0	20.39	20.17	19.36	/	0.37	20.76	20.54	19.73	33.01	PASS
		18	20.17	19.62	19.77	/	0.37	20.54	19.99	20.14	33.01	PASS
		39	20.16	18.73	20.01	/	0.37	20.53	19.1	20.38	33.01	PASS
	75	0	20.2	19.53	19.67	/	0.37	20.57	19.9	20.04	33.01	PASS
16QAM	1		21.12	20.9	18.94	/	0.37	21.49	21.27	19.31	33.01	PASS
		38	20.84	19.89	19.97	/	0.37	21.21	20.26	20.34	33.01	PASS
		74	20.81	18.52	20.15	/	0.37	21.18	18.89	20.52	33.01	PASS
	36	0	19.5	19.23	18.39	/	0.37	19.87	19.6	18.76	33.01	PASS
		18	19.33	18.71	18.85	/	0.37	19.7	19.08	19.22	33.01	PASS
		39	19.31	17.83	19.1	/	0.37	19.68	18.2	19.47	33.01	PASS
	75	0	19.34	18.6	18.73	/	0.37	19.71	18.97	19.1	33.01	PASS

Note:

1) dBd = dBi - 2.15

2) EIRP = Conducted output power + Antenna gain (dBi)

Test Band: 2 _ 20MHz Bandwidth												
Modulation	RB Allocation		Conducted Power (dBm)			Antenna gain		EIRP(dBm)			Limit	Verdict
	Size	Offset	LCH	MCH	HCH	(dBd)	(dBi)	LCH	MCH	HCH	(dBm)	
QPSK	1	0	21.55	21.67	19.12	/	0.37	21.92	22.04	19.49	33.01	PASS
		50	21.2	20.47	20.53	/	0.37	21.57	20.84	20.9	33.01	PASS
		99	21.7	19.08	21.03	/	0.37	22.07	19.45	21.4	33.01	PASS
	50	0	20.25	20.26	18.82	/	0.37	20.62	20.63	19.19	33.01	PASS
		25	20.23	19.55	19.43	/	0.37	20.6	19.92	19.8	33.01	PASS
		50	20.35	18.63	19.9	/	0.37	20.72	19	20.27	33.01	PASS
	100	0	20.29	19.49	19.39	/	0.37	20.66	19.86	19.76	33.01	PASS
16QAM	1		20.93	21.17	18.35	/	0.37	21.3	21.54	18.72	33.01	PASS
		50	20.45	20.07	19.71	/	0.37	20.82	20.44	20.08	33.01	PASS
		99	20.96	18.64	20.26	/	0.37	21.33	19.01	20.63	33.01	PASS
	50	0	19.32	19.36	17.87	/	0.37	19.69	19.73	18.24	33.01	PASS
		25	19.3	18.6	18.49	/	0.37	19.67	18.97	18.86	33.01	PASS
		50	19.43	17.67	18.94	/	0.37	19.8	18.04	19.31	33.01	PASS
	100	0	19.42	18.54	18.39	/	0.37	19.79	18.91	18.76	33.01	PASS

Note:

1) dBd = dBi - 2.15

2) EIRP = Conducted output power + Antenna gain (dBi)

FCC_LTE_4G_Band_4

Test Band: 4 _ 1.4MHz Bandwidth												
Modulation	RB Allocation		Conducted Power (dBm)			Antenna gain		EIRP(dBm)			Limit	Verdict
	Size	Offset	LCH	MCH	HCH	(dBd)	(dBi)	LCH	MCH	HCH	(dBm)	
QPSK	1	0	19.99	20.92	21.06	/	0.37	20.36	21.29	21.43	30	PASS
		2	20.09	21	21.07	/	0.37	20.46	21.37	21.44	30	PASS
		5	20.11	20.92	21.02	/	0.37	20.48	21.29	21.39	30	PASS
	3	0	20.07	20.83	21.03	/	0.37	20.44	21.2	21.4	30	PASS
		2	20.13	20.88	21.08	/	0.37	20.5	21.25	21.45	30	PASS
		3	20.1	20.82	20.97	/	0.37	20.47	21.19	21.34	30	PASS
	6	0	19.07	19.88	20.08	/	0.37	19.44	20.25	20.45	30	PASS
16QAM	1		19.07	20	20.28	/	0.37	19.44	20.37	20.65	30	PASS
		2	19.16	20.01	20.32	/	0.37	19.53	20.38	20.69	30	PASS
		5	19.18	19.93	20.18	/	0.37	19.55	20.3	20.55	30	PASS
	3	0	19.29	20.01	20.08	/	0.37	19.66	20.38	20.45	30	PASS
		2	19.45	20.05	20.16	/	0.37	19.82	20.42	20.53	30	PASS
		3	19.42	19.96	20.04	/	0.37	19.79	20.33	20.41	30	PASS
	6	0	18.16	18.89	19.12	/	0.37	18.53	19.26	19.49	30	PASS

Note:

1) dBd = dBi - 2.15

2) EIRP = Conducted output power + Antenna gain (dBi)