RF Test Report

Applicant	:	ALCHEMA Inc.
Product Type	:	ALCHEMA Hard Cider Maker
Trade Name	:	ALCHEMA
Model Number	:	ALC-CLAWHI02
Test Specification	:	FCC 47 CFR PART 15 SUBPART C ANSI C63.10:2013
Receive Date	:	Oct. 30, 2017
Test Period	:	Nov. 07 ~ Nov. 30, 2017
Issue Date	:	Dec. 14, 2017

Issue by

A Test Lab Techno Corp.
No. 140-1, Changan Street, Bade District,
Taoyuan City 33465, Taiwan (R.O.C)
Tel：+886-3-2710188 / Fax：+886-3-2710190

Taiwan Accreditation Foundation accreditation number: 1330
Test Firm MRA designation number: TW0010

Note: *This report shall not be reproduced except in full, without the written approval of A Test Lab Techno Corp. This document may be altered or revised by A Test Lab Techno Corp. personnel only, and shall be noted in the revision section of the document. The client should not use it to claim product endorsement by TAF, or any government agencies. The test results in the report only apply to the tested sample.*

Revision History

Rev.	Issue Date	Revisions	Revised By
00	Dec. 06, 2017	Initial Issue	Janet Chao
01	Dec. 14, 2017	Revised report information	Nina Lin

Verification of Compliance

Issued Date: Dec. 14, 2017

Applicant	:	ALCHEMA Inc.
Product Type	:	ALCHEMA Hard Cider Maker
Trade Name	:	ALCHEMA
Model Number	:	ALC-CLAWHI02
FCC ID	:	2AODH-ALCCLAWHI02
EUT Rated Voltage	:	DC 5V
Test Voltage	:	120 Vac / 60 Hz
Applicable Standard	:	FCC 47 CFR PART 15 SUBPART C ANSI C63.10:2013
Test Result	:	Complied
Performing Lab.	:	A Test Lab Techno Corp. No. 140-1, Changan Street, Bade District, Taoyuan City 33465, Taiwan (R.O.C) Tel：+886-3-2710188 / Fax：+886-3-2710190 Taiwan Accreditation Foundation accreditation number: 1330 http://www.atl-lab.com.tw/e-index.htm

A Test Lab Techno Corp. tested the above equipment in accordance with the requirements set forth in the above standards. All indications of Pass/Fail in this report are opinions expressed by A Test Lab Techno Corp. based on interpretations and/or observations of test results. Measurement Uncertainties were not taken into account and are published for informational purposes only. The test results show that the equipment tested is capable of demonstrating compliance with the requirements as documented in this report.

Approved By	: Fly Lu	Reviewed By	: Eric Ou Yang
(Manager)	(Fly Lu)	(Testing Engineer)	(Eric Ou Yang)

TABLE OF CONTENTS

1 General Information 5
2 EUT Description 6
3 Test Methodology 7
3.1. Mode of Operation 7
3.2. EUT Exercise Software 7
3.3. Configuration of Test System Details 8
3.4. Test Instruments 9
3.5. Test Site Environment 10
4 AC Power Line Conducted Emission Measurement 11
5 Radiated Emission Measurement 15
6 Maximum Conducted Output Power Measurement 32
7 6dB RF Bandwidth Measurement 33
8 Maximum Power Density Measurement 35
9 Out of Band Conducted Emissions Measurement 37
10 Antenna Measurement 41

1 General Information

1.1 Summary of Test Result

Standard	Item	Result	Remark
15.207	AC Power Conducted Emission	PASS	-----
15.247(d)	Transmitter Radiated Emissions	PASS	-----
15.247(b)(3)	Max. Output Power	PASS	-----
15.247(a)(2)	6dB RF Bandwidth	PASS	-----
15.247(e)	Maximum Power Spectral Density	PASS	-----
15.247(d)	Out of Band Conducted Spurious Emission	PASS	-----
15.203	Antenna Requirement	PASS	-----

The test results of this report relate only to the tested sample(s) identified in this report. Manufacturer or whom it may concern should recognize the pass or fail of the test result.

1.2 Measurement Uncertainty

Test Item	Frequency Range	Uncertainty (dB)
Conducted Emission	9kHz ~ 150KHz	2.7
	150kHz ~ 30MHz	2.7
Radiated Emission	9kHz ~ 30MHz	1.7
	30MHz ~ 1000MHz	5.7
	1000MHz ~ 18000MHz	5.5
	18000MHz ~ 26500MHz	4.8
	26500MHz ~ 40000MHz	4.8
Conducted Output Power	+0.27 dB / -0.28 dB	
RF Bandwidth	4.96%	
Power Spectral Density	+0.71 dB / -0.77 dB	

2 EUT Description

Applicant	ALCHEMA Inc. 4900 California Avenue Tower B, 2nd Floor Bakersfield California CA 93309 United States of America	
Manufacturer	ALCHEMA Inc. 4900 California Avenue Tower B, 2nd Floor Bakersfield California CA 93309 United States of America	
Product Type	ALCHEMA Hard Cider Maker	
Trade Name	ALCHEMA	
Model No.	ALC-CLAWHI02	
FCC ID	2AODH-ALCCLAWHI02	
Frequency Range	2402 ~ 2480 MHz	
Modulation Type	GFSK	
Operate Temp. Range	10 ~ +35 ℃	
Antenna information	Type	Max. Gain (dBi)
	PCB Antenna	2.23
RF Output Power	0.00183 W	

3 Test Methodology

3.1. Mode of Operation

Decision of Test ATL has verified the construction and function in typical operation. All the test modes were carried out with the EUT in normal operation, which was shown in this test report and defined as:

Test Mode
Mode 1: Transmit mode
Mode 2: Bluetooth LE Continuous TX mode

Software used to control the EUT for staying in continuous transmitting mode was programmed.

After verification, all tests were carried out with the worst case test modes as shown below except radiated spurious emission below 1GHz and power line conducted emissions below 30MHz, which worst case was in TX mode only.

By preliminary testing and verifying three axis (X, Y and Z) position of EUT transmitted status, it was found that "X axis" position was the worst, then the final test was executed the worst condition and test data were recorded in this report.

Note: The EUT was programmed to be in continuously transmitting mode and the transmit duty cycle is not less than 98%.

3.2. EUT Exercise Software

1	Setup the EUT shown on "Configuration of Test System Details."
2	Turn on the power of all equipment.
3	Turn on TX function
4	EUT run test program.

Measurement Software	
1	EZ-EMC Ver. ATL-03A1-1
2	EZ-EMC Ver ATL-ITC-3A1-1

3.3. Configuration of Test System Details

Conducted Emission

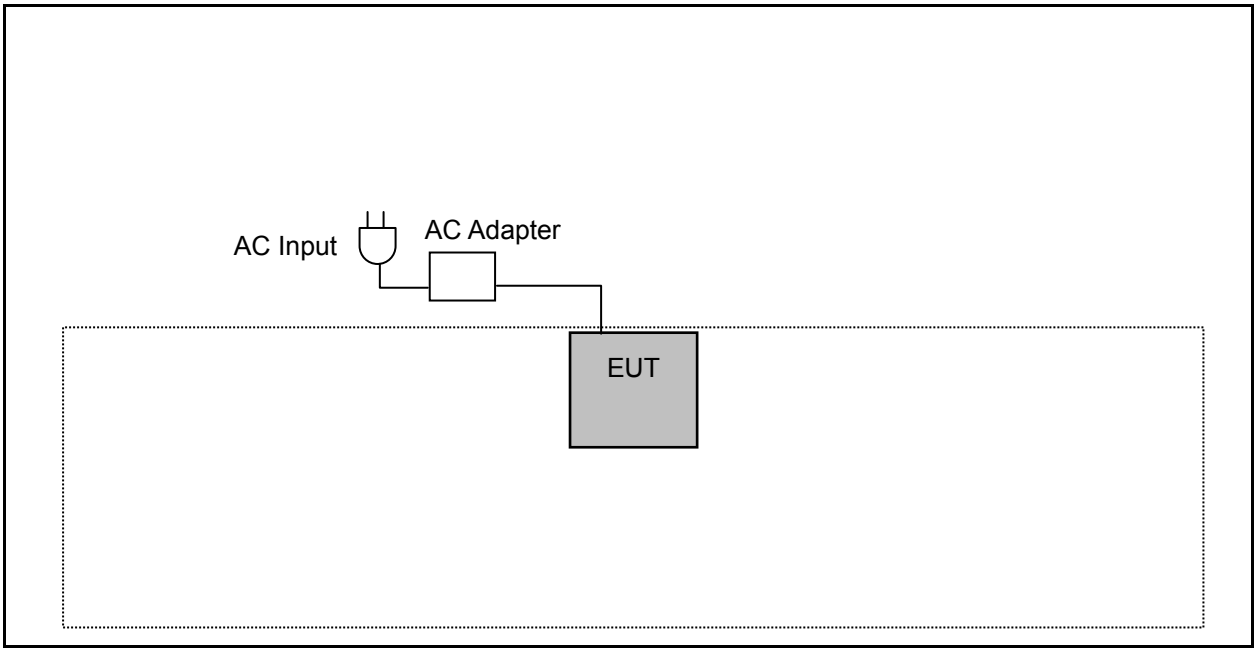

Radiated Emissions

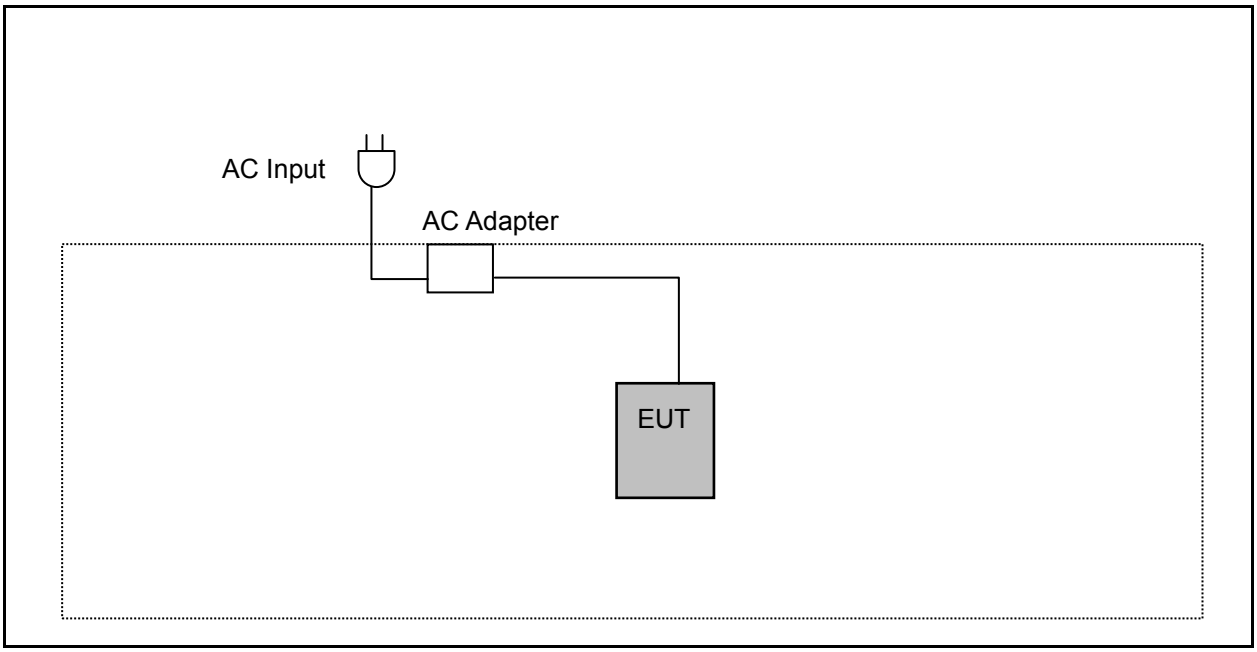

3.4. Test Instruments

For Conducted Emission

Equipment	Manufacturer	Model Number	Serial Number	Cal. Date	Cal. Period
Test Receiver	R&S	ESCI	100367	05/18/2017	1 year
LISN	R&S	ENV216	101040	04/01/2017	1 year
LISN	R&S	ENV216	101041	03/15/2017	1 year
RF Cable	Woken	00100D1380194M	TE-02-02	05/19/2017	1 year
Test Site	ATL	TE02	TE02	N.C.R.	-----

For Radiated Emissions

Equipment	Manufacturer	Model Number	Serial Number	Cal. Date	Remark
RF Pre-selector (9KHz~1GHz)	Agilent	N9039A	MY46520256	04/24/2017	1 year
Spectrum Analyzer (3Hz~44GHz)	Agilent	E4446A	MY46180578	04/24/2017	1 year
Pre Amplifier (1~26.5GHz)	Agilent	8449B	3008A02237	10/16/2017	1 year
Pre Amplifier (100KHz~1.3GHz)	Agilent	8447D	2944A11119	01/12/2017	1 year
Pre Amplifier (26.5~40GHz)	EMCI	EMC2654045	980028	08/29/2017	1 year
Pre Amplifier (1~26.5GHz)	EMCI	EMC012645SE	980289	01/16/2017	1 year
Broadband Antenna	Schwarzbeck	VULB9168	416	10/26/2017	1 year
Horn Antenna (1~18GHz)	SCHWARZBECK MESS-ELEKTRONIK	BBHA9120D	9120D-550	06/22/2017	1 year
Horn Antenna (18~40GHz)	ETS	3116	86467	09/11/2017	1 year
Loop Antenna	COM-POWER CORPORATION	AL-130	121014	01/26/2017	1 year
Microwave Cable	EMCI	EMC102-KM-KM-14000	151001	02/20/2017	1 year
Microwave Cable	EMCI	EMC-104-SM-SM-14000	140202	02/20/2017	1 year
Microwave Cable	EMCI	EMC104-SM-SM-600	140301	02/20/2017	1 year
Test Site	ATL	TE01	888001	08/29/2017	1 year

Note: N.C.R. = No Calibration Request.

For Conducted

Equipment	Manufacturer	Model Number	Serial Number	Cal. Date	Remark
Power Sensor	Anritsu	MA2411B	1126022	08/28/2017	1 year
Power Meter	Anritsu	ML2495A	1135009	08/28/2017	1 year
Spectrum Analyzer (3Hz~13.2GHz)	Agilent	E4445A	MY45300744	12/19/2016	1 year
Microwave Cable	EMCI	EMC104-SM-SM-1 500	140303	02/22/2017	1 year
Spectrum Analyzer (9KHz~26.5GHz)	Agilent	E4408B	MY45107753	08/14/2017	1 year
Test Site	ATL	TE05	TE05	N.C.R.	-----

Note: N.C.R. = No Calibration Request.

3.5. Test Site Environment

Items	Required (IEC 60068-1)	Actual
Temperature (°C)	15-35	26
Humidity (%RH)	25-75	60
Barometric pressure (mbar)	860-1060	950

4 AC Power Line Conducted Emission Measurement

■ Limit

Frequency (MHz)	Quasi-peak	Average
0.15 - 0.5	66 to 56	56 to 46
0.50 - 5.0	56	46
5.0 - 30.0	60	50

■ Test Setup

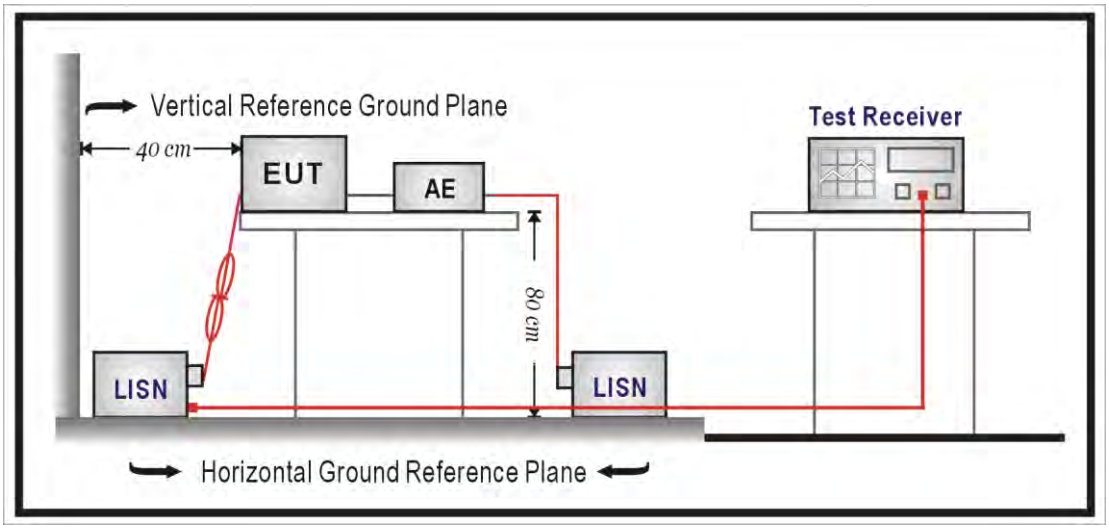

■ Test Procedure

The EUT and simulators are connected to the main power through a line impedance stabilization network (L.I.S.N.). This provides a 50Ω// 50uH coupling impedance for the measuring equipment. The peripheral devices are also connected to the main power through a LISN that provides a 50Ω// 50uH coupling impedance with 50ohm termination.

Tabletop device shall be placed on a non-conducting platform, of nominal size 1 m by 1.5 m, raised 80 cm above the reference ground plane. The wall of screened room shall be located 40cm to the rear of the EUT. Other surfaces of tabletop or floor standing EUT shall be at least 80cm from any other ground conducting surface including one or more LISNs. For floor-standing device shall be placed under the EUT with a 12mm insulating material.

Conducted emissions were investigated over the frequency range from 0.15 MHz to 30 MHz using a resolution bandwidth of 9 kHz. The equipment under test (EUT) shall be meet the limits in section 4.1, as applicable, including the average limit and the quasi-peak limit when using respectively, an average detector and quasi-peak detector measured in accordance with the methods described of related standard. When all of peak value were complied with quasi-peak and average limit from 150kHz to 30MHz then quasi-peak and average measurement was unnecessary.

The AMN shall be placed 0,8 m from the boundary of the unit under test and bonded to a ground reference plane for AMNs mounted on top of the ground reference plane. This distance is between the closest points of the AMN and the EUT. All other units of the EUT and associated equipment shall be at least 0,8 m from the AMN. If the mains power cable is longer than 1m then the cable shall be folded back and forth at the centre of the lead to form a bundle no longer than 0.4m. All of interconnecting cables that hang closer than 40cm to the ground plane shall be folded back and forth in the center forming a bundle 30 cm to 40 cm long. All of EUT and AE shall be separate place more than 0.1m. All 50 Ω ports of the LISN shall be resistively terminated into 50 Ω loads when not connected to the measuring instrument.

If the reading of the measuring receiver shows fluctuations close to the limit, the reading shall be observed for at least 15 s at each measurement frequency; the higher reading shall be recorded with the exception of any brief isolated high reading which shall be ignored.

■ Test Result

Standard:	FCC Part 15.247	Power:	AC 120V/60Hz
Test Mode:	Mode 1	Temp.(℃)/Hum.(%RH):	26(℃)/60%RH
Line:	L1	Date:	11/30/2017
Description:			

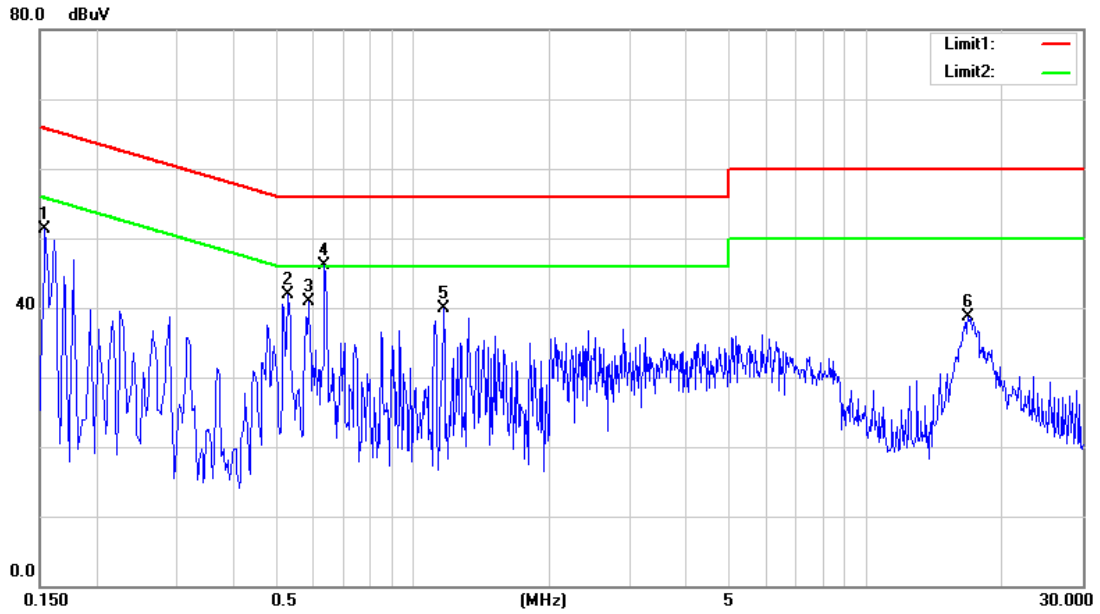

No.	Frequency (MHz)	QP reading (dBuV)	AVG reading (dBuV)	Correction factor (dB)	QP result (dBuV)	AVG result (dBuV)	QP limit (dBuV)	AVG limit (dBuV)	QP margin (dB)	AVG margin (dB)	Remark
1	0.1540	35.80	13.92	9.54	45.34	23.46	65.78	55.78	-20.44	-32.32	Pass
2	0.5300	32.47	26.65	9.54	42.01	36.19	56.00	46.00	-13.99	-9.81	Pass
3	0.5900	29.46	20.74	9.54	39.00	30.28	56.00	46.00	-17.00	-15.72	Pass
4	0.6380	35.40	29.52	9.55	44.95	39.07	56.00	46.00	-11.05	-6.93	Pass
5	1.1700	29.93	22.01	9.58	39.51	31.59	56.00	46.00	-16.49	-14.41	Pass
6	16.7620	24.29	14.33	9.86	34.15	24.19	60.00	50.00	-25.85	-25.81	Pass

Note: 1. Result (dBuV) = Correction factor (dB) + Reading(dBuV).
2. Correction factor (dB) = Cable loss (dB) + L.I.S.N. factor (dB).

Standard:	FCC Part 15.247	Power:	AC 120V/60Hz
Test Mode:	Mode 1	Temp.(℃)/Hum.(%RH):	26(℃)/60%RH
Line:	N	Date:	11/30/2017
Description:			

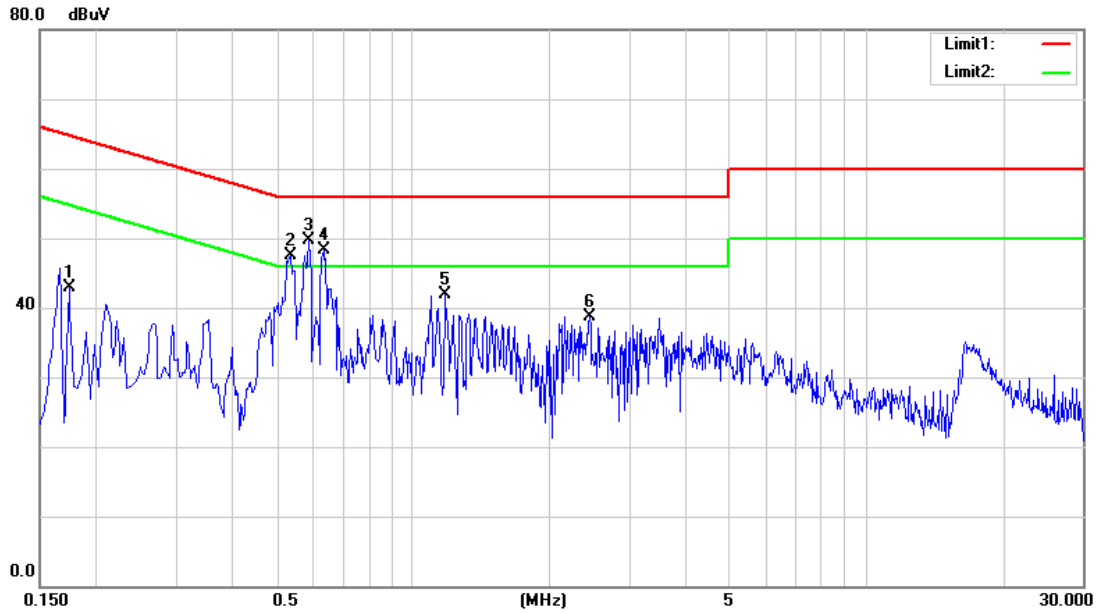

No.	Frequency (MHz)	QP reading (dBuV)	AVG reading (dBuV)	Correction factor (dB)	QP result (dBuV)	AVG result (dBuV)	QP limit (dBuV)	AVG limit (dBuV)	QP margin (dB)	AVG margin (dB)	Remark
1	0.1740	30.41	11.76	9.63	40.04	21.39	64.77	54.77	-24.73	-33.38	Pass
2	0.5380	34.02	25.86	9.64	43.66	35.50	56.00	46.00	-12.34	-10.50	Pass
3	0.5900	37.08	25.10	9.64	46.72	34.74	56.00	46.00	-9.28	-11.26	Pass
4	0.6340	38.10	30.52	9.65	47.75	40.17	56.00	46.00	-8.25	-5.83	Pass
5	1.1740	30.68	19.65	9.68	40.36	29.33	56.00	46.00	-15.64	-16.67	Pass
6	2.4500	25.42	13.72	9.72	35.14	23.44	56.00	46.00	-20.86	-22.56	Pass

Note: 1. Result (dBuV) = Correction factor (dB) + Reading(dBuV).

2. Correction factor (dB) = Cable loss (dB) + L.I.S.N. factor (dB).

5 Radiated Emission Measurement

■ Limit

According to §15.209(a), except as provided elsewhere in this subpart, the emissions from an intentional radiator shall not exceed the field strength levels specified in the following table:

Frequency (MHz)	Field Strength (μV/m at meter)	Measurement Distance (meters)
0.009 – 0.490	2400 / F (kHz)	300
0.490 – 1.705	24000 / F (kHz)	30
1.705 – 30.0	30	30
30 - 88	100**	3
88-216	150**	3
216-960	200**	3
Above 960	500	3

** Except as provided in paragraph (g), fundamental emissions from intentional radiators operating under this Section shall not be located in the frequency bands 54-72 MHz, 76-88 MHz, 174-216 MHz or 470-806 MHz. However, operation within these frequency bands is permitted under other sections of this Part, e.g., Sections 15.231 and 15.241.

■ Setup

9kHz ~ 30MHz

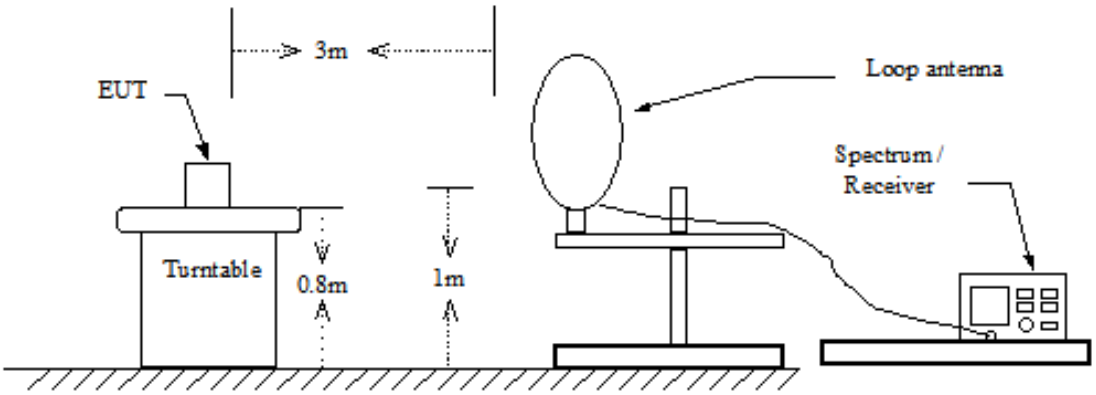

Below 1GHz

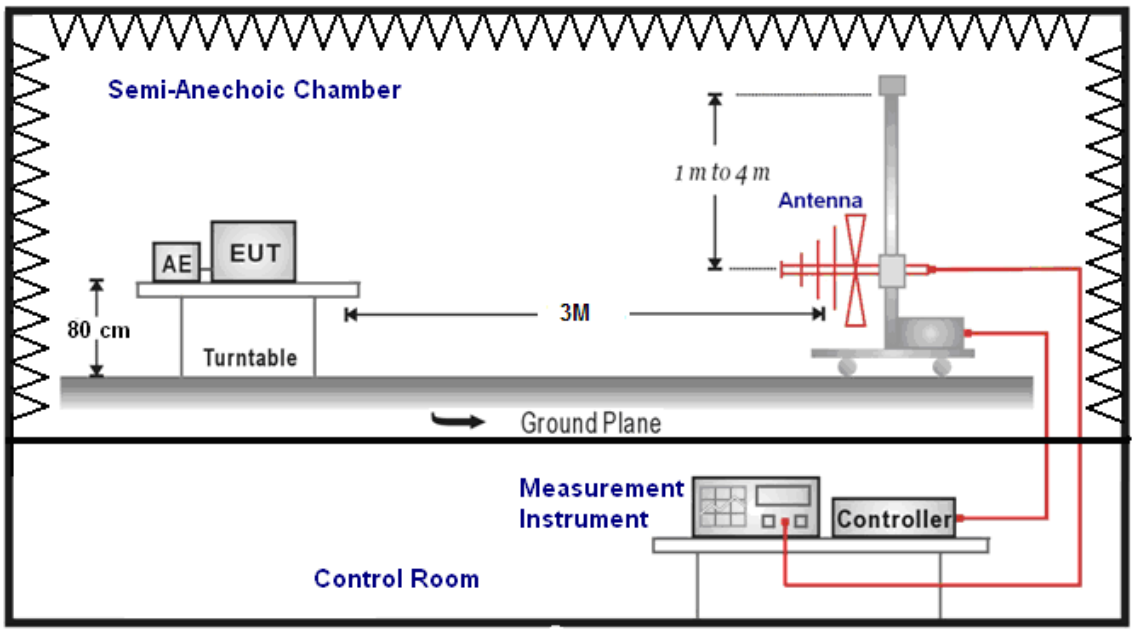

Above 1GHz

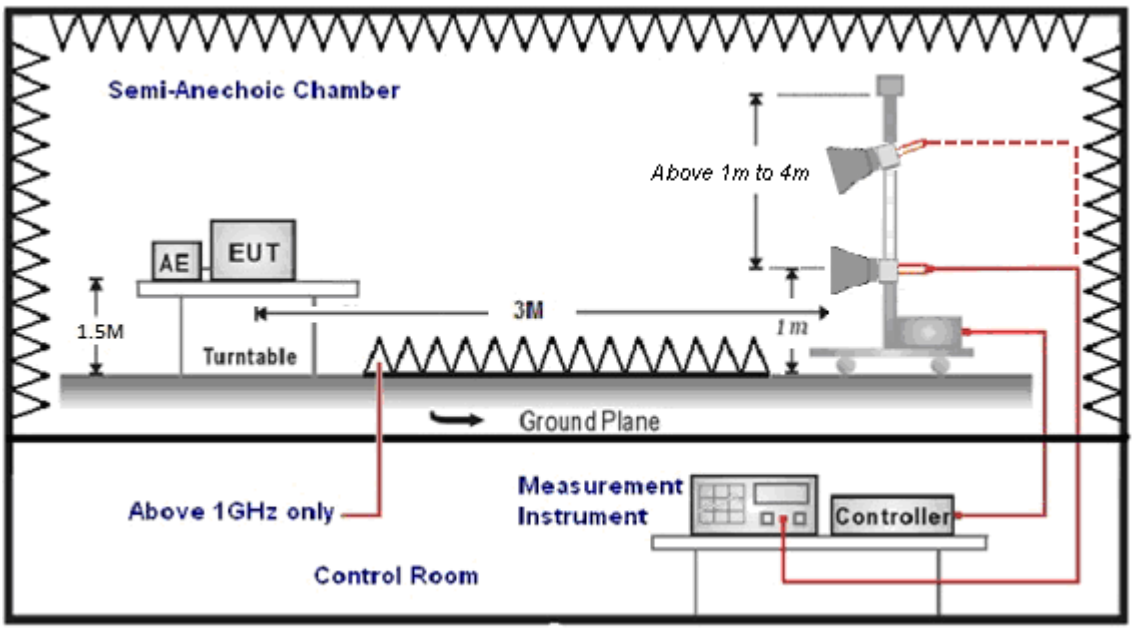

Test Procedure

Final radiation measurements were made on a three-meter, Semi Anechoic Chamber. The EUT system was placed on a nonconductive turntable which is 0.8 or 1.5 meters height(below 1GHz use 0.8m turntable / above 1GHz use 1.5m turntable), top surface 1.0 x 1.5 meter. The spectrum was examined from 250 MHz to 2.5 GHz in order to cover the whole spectrum below 10th harmonic which could generate from the EUT. During the test, EUT was set to transmit continuously & Measurements spectrum range from 9 kHz to 26.5 GHz is investigated.

For measurements below 1 GHz the resolution bandwidth is set to 100 kHz for peak detection measurements or 120 kHz for quasi-peak detection measurements. Peak detection is used unless otherwise noted as quasi-peak.

For measurements above 1 GHz the resolution bandwidth is set to 1 MHz, and then the video bandwidth is set to 1 MHz for peak measurements and 10 Hz for average measurements when Duty cycle >98% / 1/T for average measurements when Duty cycle <98%. A nonconductive material surrounded the EUT to supporting the EUT for standing on tree orthogonal planes. At each condition, the EUT was rotated 360 degrees, and the antenna was raised and lowered from one to four meters to find the maximum emission levels. Measurements were taken using both horizontal and vertical antenna polarization.

SCHWARZBECK MESS-ELEKTRONIK Biconilog Antenna at 3 Meter and the SCHWARZBECK Double Ridged Guide Antenna was used in frequencies 1 – 26.5 GHz at a distance of 1 meter. All test results were extrapolated to equivalent signal at 3 meters utilizing an inverse linear distance extrapolation Factor (20dB/decade).

For testing above 1GHz, the emission level of the EUT in peak mode was 20dB lower than average limit (that means the emission level in peak mode also complies with the limit in average mode), then testing will be stopped and peak values of EUT will be reported, otherwise, the emissions will be measured in average mode again and reported.

Appropriate preamplifiers were used for improving sensitivity and precautions were taken to avoid overloading or desensitizing the spectrum analyzer. No post – detector video filters were used in the test.

The spectrum analyzer's 6 dB bandwidth was set to 1 MHz, and the analyzer was operated in the peak detection mode, for frequencies both below and up 1 GHz. The average levels were obtained by subtracting the duty cycle correction factor from the peak readings.

The following procedures were used to convert the emission levels measured in decibels referenced to 1 microvolt (dBuV) into field intensity in micro volts pre meter (uV/m).

The actual field intensity in decibels referenced to 1 microvolt in to field intensity in micro colts per meter (dBuV/m).

The actual field is intensity in referenced to 1 microvolt per meter (dBuV/m) is determined by algebraically adding the measured reading in dBuV, the antenna factor (dB), and cable loss (dB) and Subtracting the gain of preamplifier (dB) is auto calculate in spectrum analyzer.

(1) Amplitude (dBuV/m) = FI (dBuV) +AF (dBuV) +CL (dBuV)-Gain (dB)
FI= Reading of the field intensity.
AF= Antenna factor.
CL= Cable loss.
P.S Amplitude is auto calculate in spectrum analyzer.

(2) Actual Amplitude (dBuV/m) = Amplitude (dBuV)-Dis(dB)
The FCC specified emission limits were calculated according the EUT operating frequency and by following linear interpolation equations:
(a) For fundamental frequency : Transmitter Output < +30dBm
(b) For spurious frequency : Spurious emission limits = fundamental emission limit /10

Data of measurement within this frequency range without mark in the table above means the reading of emissions are attenuated more than 20dB below the permissible limits or the field strength is too small to be measured.

■ Test Result

Below 1GHz

Standard:	FCC Part 15.247	Test Distance:	3m
Test Mode:	Mode 1	Power:	AC 120V/60Hz
		Temp.(℃)/Hum.(%RH):	26(℃)/60%RH
		Date:	11/10/2017

Frequency (MHz)	Reading (dBuV)	Correct Factor (dB/m)	Result (dBuV/m)	Limit (dBuV/m)	Margin (dB)	Remark	Ant.Polar. H / V
112.4500	40.50	-8.58	31.92	43.50	-11.58	QP	H
173.5600	38.29	-5.69	32.60	43.50	-10.90	QP	H
202.6600	38.68	-7.15	31.53	43.50	-11.97	QP	H
257.9500	32.57	-4.81	27.76	46.00	-18.24	QP	H
498.5100	32.54	0.65	33.19	46.00	-12.81	QP	H
933.0700	27.76	9.22	36.98	46.00	-9.02	QP	H
112.4500	46.38	-8.58	37.80	43.50	-5.70	QP	V
154.1600	38.95	-5.18	33.77	43.50	-9.73	QP	V
273.4700	30.84	-4.06	26.78	46.00	-19.22	QP	V
492.6900	35.68	0.56	36.24	46.00	-9.76	QP	V
773.0200	27.72	6.16	33.88	46.00	-12.12	QP	V
938.8900	28.62	9.31	37.93	46.00	-8.07	QP	V

Note:
1. Result (dBuV) = Correction factor (dB) + Reading(dBuV).
2. Correction factor (dB/m) = Antenna Factor (dB/m) + Cable loss (dB) – Pre-Amplifier gain (dB).
3. No emission found between lowest internal used/generated frequencies to 30MHz (9 kHz~30MHz).

Above 1GHz

Standard:	FCC Part 15.247	Test Distance:	3m
Test item:	Harmonic	Power:	AC 120V/60Hz
Frequency:	2402MHz	Temp.(℃)/Hum.(%RH):	26(℃)/60%RH
Mode:	Mode 2	Date:	11/10/2017
Ant.Polar.:	Horizontal		

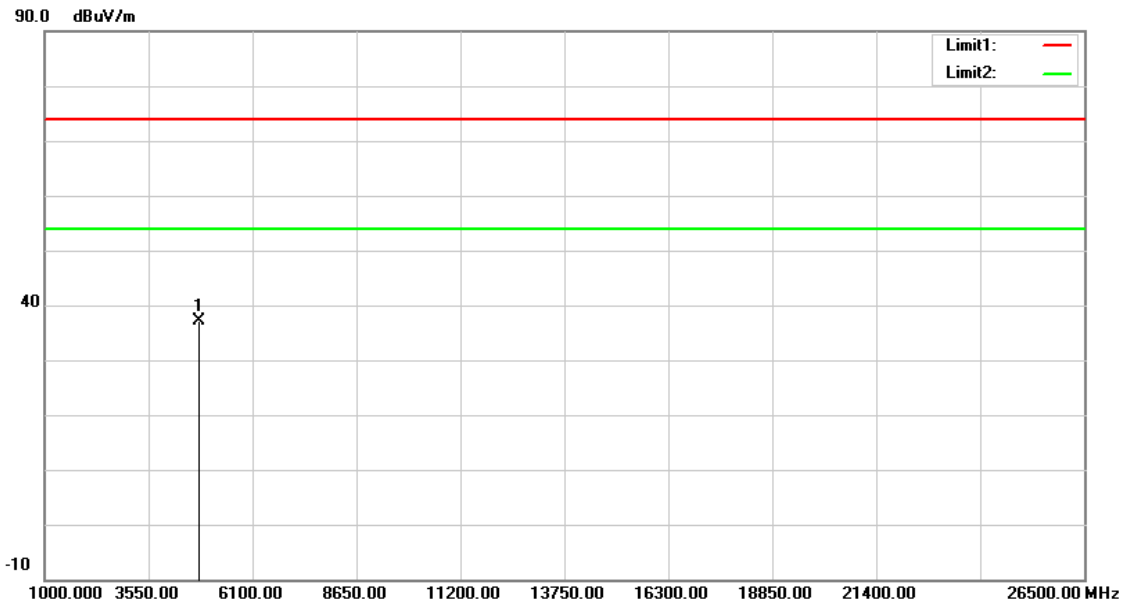

No.	Frequency (MHz)	Reading (dBuV)	Correct Factor (dB/m)	Result (dBuV/m)	Limit (dBuV/m)	Margin (dB)	Remark
1	4804.000	33.68	3.52	37.20	74.00	-36.80	peak

Note:1.Result (dBuV/m) = Correct Factor (dB/m) + Reading(dBuV).

2.Correction factor (dB/m) = Antenna Factor (dB/m) + Cable loss (dB) – Pre-Amplifier gain (dB).

3. When the peak results are less than average limit, so not need to evaluate the average.

Standard:	FCC Part 15.247	Test Distance:	3m
Test item:	Harmonic	Power:	AC 120V/60Hz
Frequency:	2402MHz	Temp.(℃)/Hum.(%RH):	26(℃)/60%RH
Mode:	Mode 2	Date:	11/10/2017
Ant.Polar.:	Vertical		

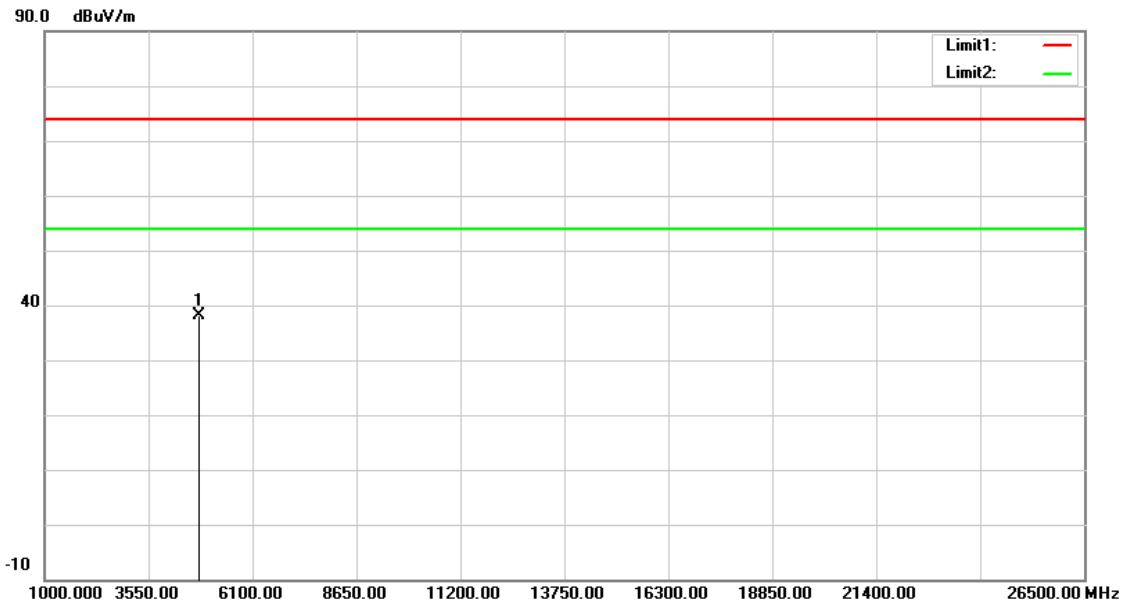

No.	Frequency (MHz)	Reading (dBuV)	Correct Factor (dB/m)	Result (dBuV/m)	Limit (dBuV/m)	Margin (dB)	Remark
1	4804.000	34.61	3.52	38.13	74.00	-35.87	peak

Note:1.Result (dBuV/m) = Correct Factor (dB/m) + Reading(dBuV).

2.Correction factor (dB/m) = Antenna Factor (dB/m) + Cable loss (dB) – Pre-Amplifier gain (dB).

3. When the peak results are less than average limit, so not need to evaluate the average.

Standard:	FCC Part 15.247	Test Distance:	3m
Test item:	Harmonic	Power:	AC 120V/60Hz
Frequency:	2440MHz	Temp.(℃)/Hum.(%RH):	26(℃)/60%RH
Mode:	Mode 2	Date:	11/10/2017
Ant.Polar.:	Horizontal		

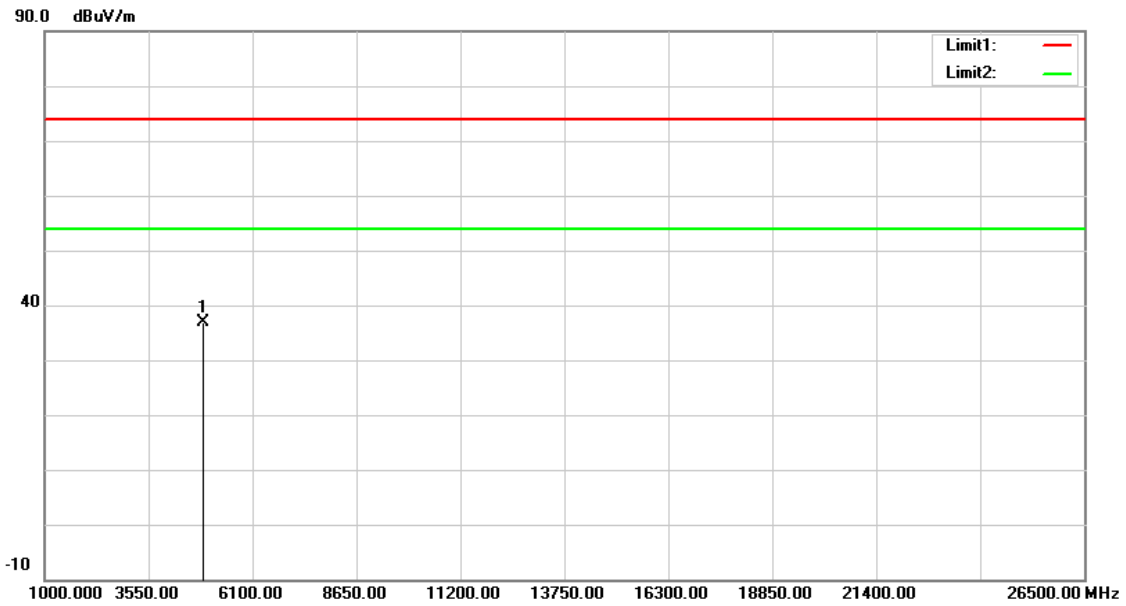

No.	Frequency (MHz)	Reading (dBuV)	Correct Factor (dB/m)	Result (dBuV/m)	Limit (dBuV/m)	Margin (dB)	Remark
1	4880.000	33.17	3.77	36.94	74.00	-37.06	peak

Note:1.Result (dBuV/m) = Correct Factor (dB/m) + Reading(dBuV).

2.Correction factor (dB/m) = Antenna Factor (dB/m) + Cable loss (dB) – Pre-Amplifier gain (dB).

3. When the peak results are less than average limit, so not need to evaluate the average.

Standard:	FCC Part 15.247	Test Distance:	3m
Test item:	Harmonic	Power:	AC 120V/60Hz
Frequency:	2440MHz	Temp.(℃)/Hum.(%RH):	26(℃)/60%RH
Mode:	Mode 2	Date:	11/10/2017
Ant.Polar.:	Vertical		

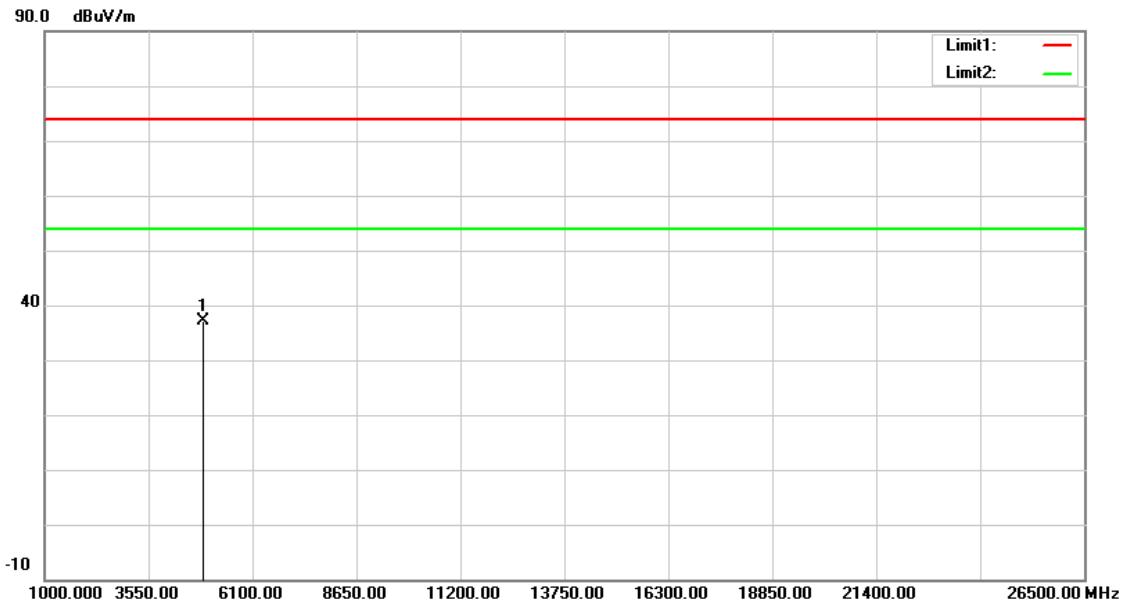

No.	Frequency (MHz)	Reading (dBuV)	Correct Factor (dB/m)	Result (dBuV/m)	Limit (dBuV/m)	Margin (dB)	Remark
1	4880.000	33.38	3.77	37.15	74.00	-36.85	peak

Note:1.Result (dBuV/m) = Correct Factor (dB/m) + Reading(dBuV).

2.Correction factor (dB/m) = Antenna Factor (dB/m) + Cable loss (dB) – Pre-Amplifier gain (dB).

3. When the peak results are less than average limit, so not need to evaluate the average.

Standard:	FCC Part 15.247	Test Distance:	3m
Test item:	Harmonic	Power:	AC 120V/60Hz
Frequency:	2480MHz	Temp.(℃)/Hum.(%RH):	26(℃)/60%RH
Mode:	Mode 2	Date:	11/10/2017
Ant.Polar.:	Horizontal		

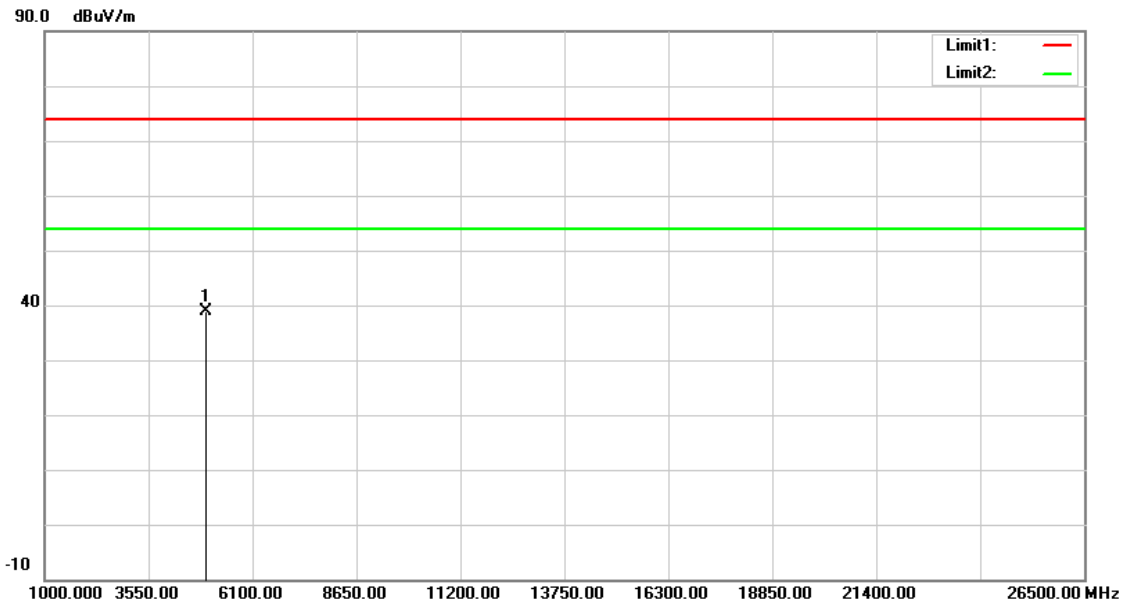

No.	Frequency (MHz)	Reading (dBuV)	Correct Factor (dB/m)	Result (dBuV/m)	Limit (dBuV/m)	Margin (dB)	Remark
1	4960.000	34.99	4.01	39.00	74.00	-35.00	peak

Note:1.Result (dBuV/m) = Correct Factor (dB/m) + Reading(dBuV).

2.Correction factor (dB/m) = Antenna Factor (dB/m) + Cable loss (dB) – Pre-Amplifier gain (dB).

3. When the peak results are less than average limit, so not need to evaluate the average.

Standard:	FCC Part 15.247	Test Distance:	3m
Test item:	Harmonic	Power:	AC 120V/60Hz
Frequency:	2480MHz	Temp.(℃)/Hum.(%RH):	26(℃)/60%RH
Mode:	Mode 2	Date:	11/10/2017
Ant.Polar.:	Vertical		

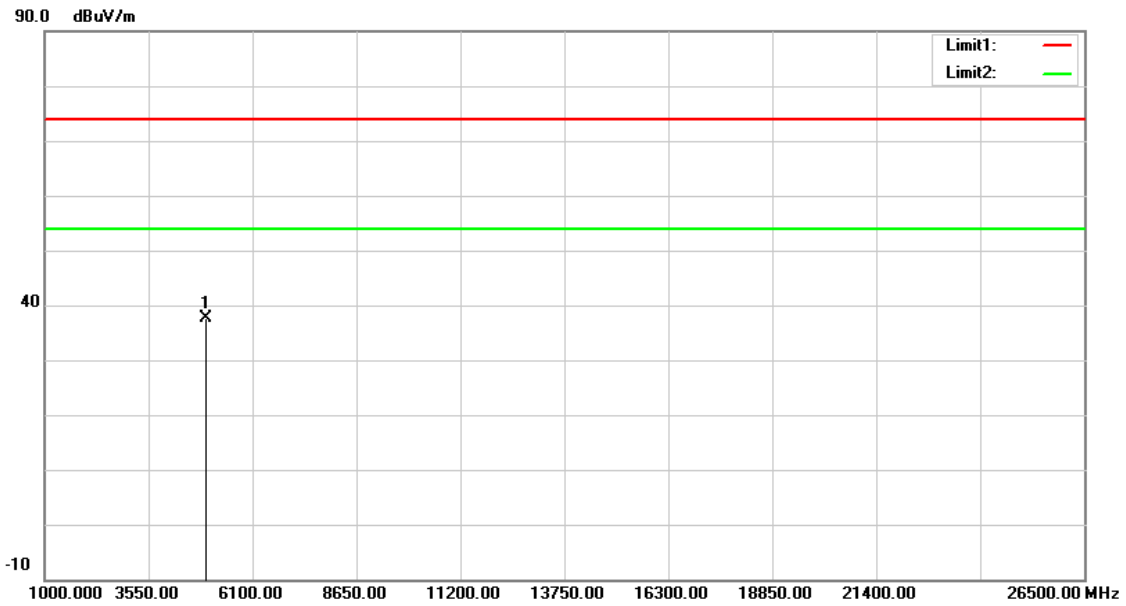

No.	Frequency (MHz)	Reading (dBuV)	Correct Factor (dB/m)	Result (dBuV/m)	Limit (dBuV/m)	Margin (dB)	Remark
1	4960.000	33.57	4.01	37.58	74.00	-36.42	peak

Note:1.Result (dBuV/m) = Correct Factor (dB/m) + Reading(dBuV).

2.Correction factor (dB/m) = Antenna Factor (dB/m) + Cable loss (dB) – Pre-Amplifier gain (dB).

3. When the peak results are less than average limit, so not need to evaluate the average.

Standard:	FCC Part 15.247	Test Distance:	3m
Test item:	Harmonic	Power:	AC 120V/60Hz
Mode:	Simultaneous Transmitting (BLE+Wi-Fi)	Temp.(℃)/Hum.(%RH):	26(℃)/60%RH
		Date:	11/10/2017
Ant.Polar.:	Horizontal		

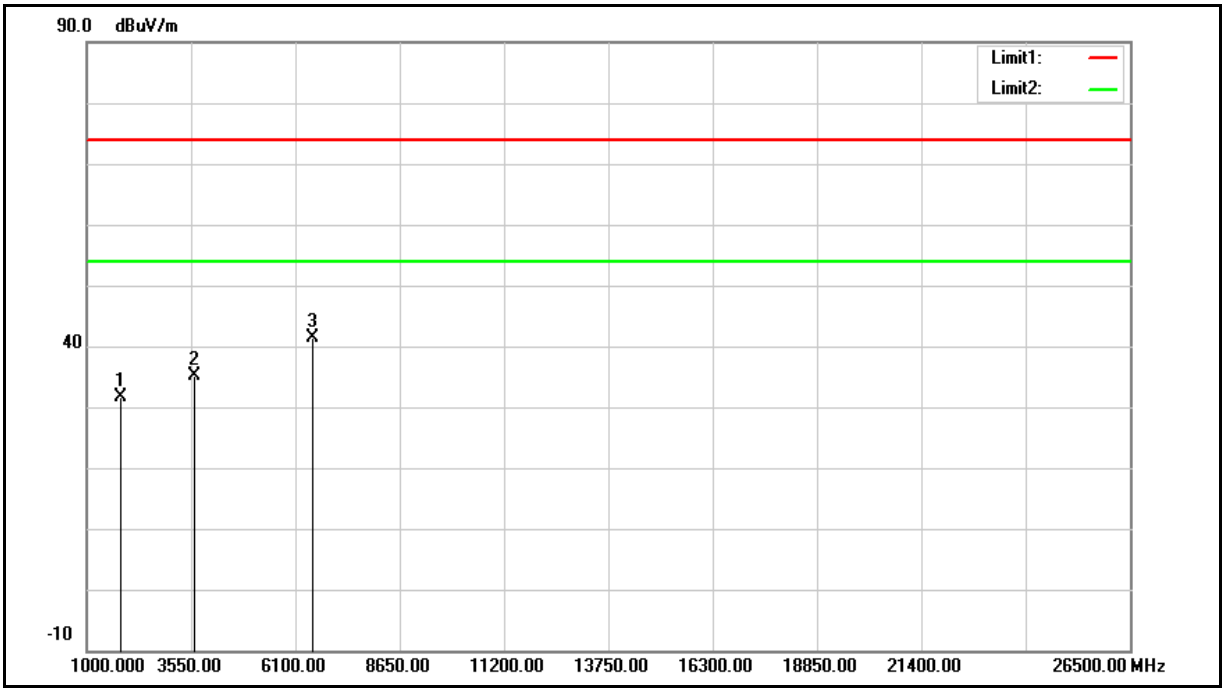

No.	Frequency (MHz)	Reading (dBuV)	Correct Factor (dB/m)	Result (dBuV/m)	Limit (dBuV/m)	Margin (dB)	Remark
1	1816.000	37.26	-5.66	31.60	74.00	-42.40	peak
2	3618.000	35.15	0.03	35.18	74.00	-38.82	peak
3	6525.000	33.56	7.86	41.42	74.00	-32.58	peak

Note:1.Result (dBuV/m) = Correct Factor (dB/m) + Reading(dBuV).

2.Correction factor (dB/m) = Antenna Factor (dB/m) + Cable loss (dB) – Pre-Amplifier gain (dB).

3. When the peak results are less than average limit, so not need to evaluate the average.

Standard:	FCC Part 15.247	Test Distance:	3m
Test item:	Harmonic	Power:	AC 120V/60Hz
Mode:	Simultaneous Transmitting	Temp.(℃)/Hum.(%RH):	26(℃)/60%RH
	(BLE+Wi-Fi)	Date:	11/10/2017
Ant.Polar.:	Vertical		

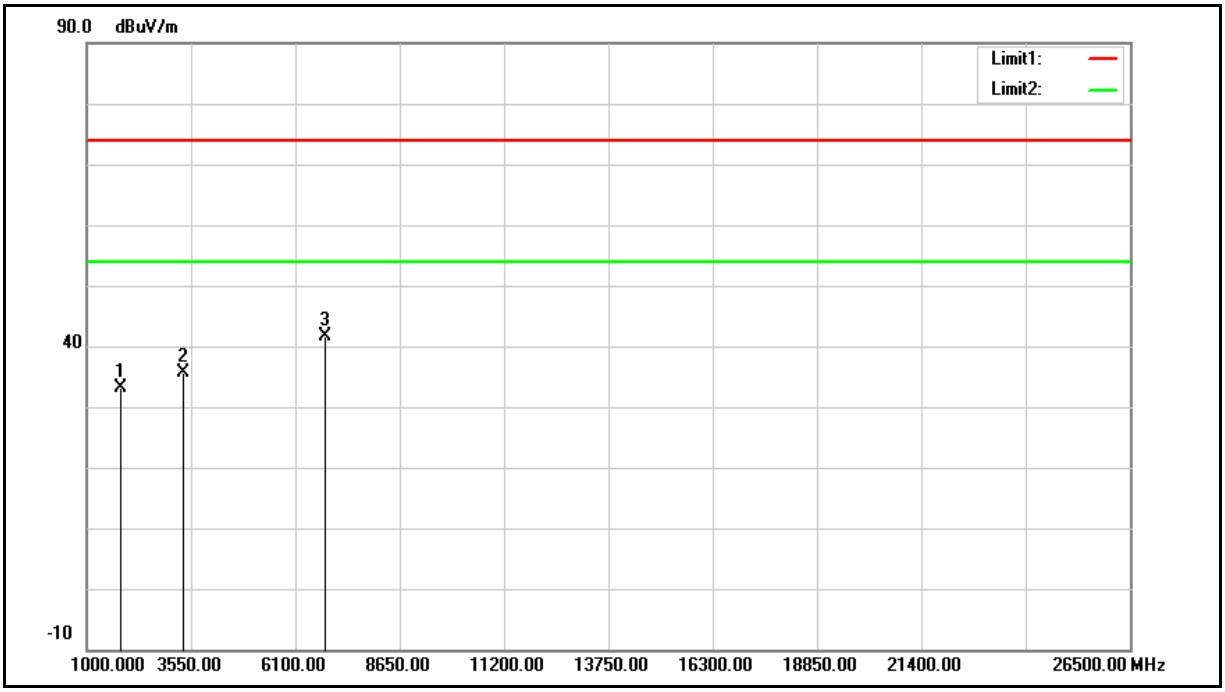

No.	Frequency (MHz)	Reading (dBuV)	Correct Factor (dB/m)	Result (dBuV/m)	Limit (dBuV/m)	Margin (dB)	Remark
1	1833.000	38.80	-5.59	33.21	74.00	-40.79	peak
2	3329.000	36.34	-0.72	35.62	74.00	-38.38	peak
3	6831.000	32.94	8.65	41.59	74.00	-32.41	peak

Note:1.Result (dBuV/m) = Correct Factor (dB/m) + Reading(dBuV).

2.Correction factor (dB/m) = Antenna Factor (dB/m) + Cable loss (dB) – Pre-Amplifier gain (dB).

3. When the peak results are less than average limit, so not need to evaluate the average.

Band Edge.

Standard:	FCC Part 15.247	Test Distance:	3m
Test item:	Band edge	Power:	AC 120V/60Hz
Frequency:	2402MHz	Temp.(℃)/Hum.(%RH):	26(℃)/60%RH
Mode:	Mode 2	Date:	11/10/2017
Ant.Polar.:	Horizontal		

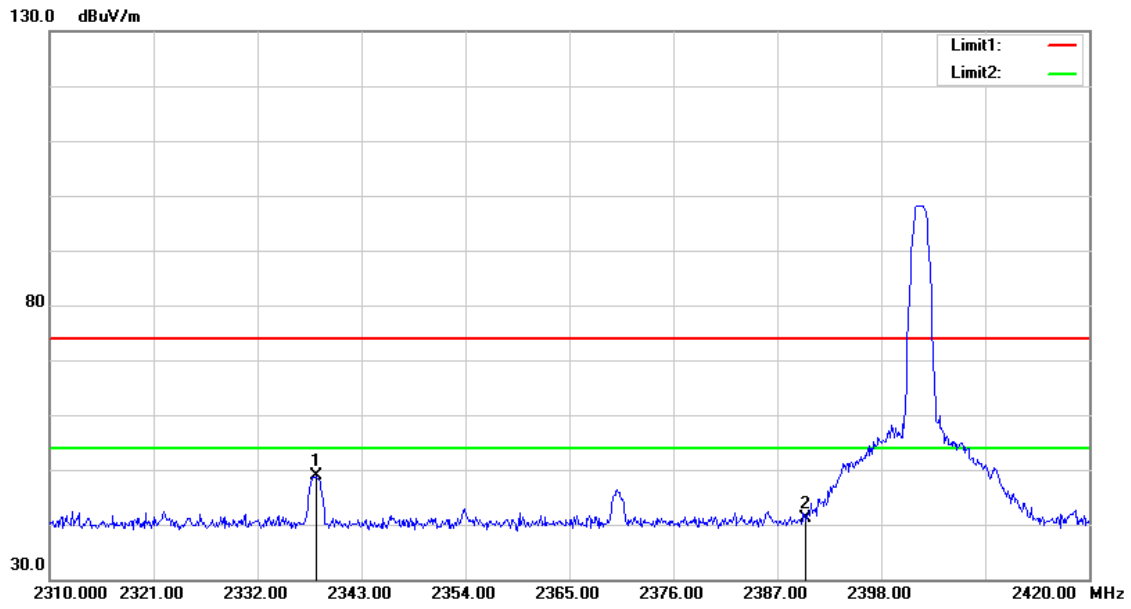

No.	Frequency (MHz)	Reading (dBuV)	Correct Factor (dB/m)	Result (dBuV/m)	Limit (dBuV/m)	Margin (dB)	Remark
1	2338.160	52.35	-3.48	48.87	74.00	-25.13	peak
2	2390.000	44.35	-3.30	41.05	74.00	-32.95	peak

Note:1.Result (dBuV/m) = Correct Factor (dB/m) + Reading(dBuV).

2.Correction factor (dB/m) = Antenna Factor (dB/m) + Cable loss (dB) – Pre-Amplifier gain (dB).

3. When the peak results are less than average limit, so not need to evaluate the average.

Standard:	FCC Part 15.247	Test Distance:	3m
Test item:	Band edge	Power:	AC 120V/60Hz
Frequency:	2402MHz	Temp.(℃)/Hum.(%RH):	26(℃)/60%RH
Mode:	Mode 2	Date:	11/10/2017
Ant.Polar.:	Vertical		

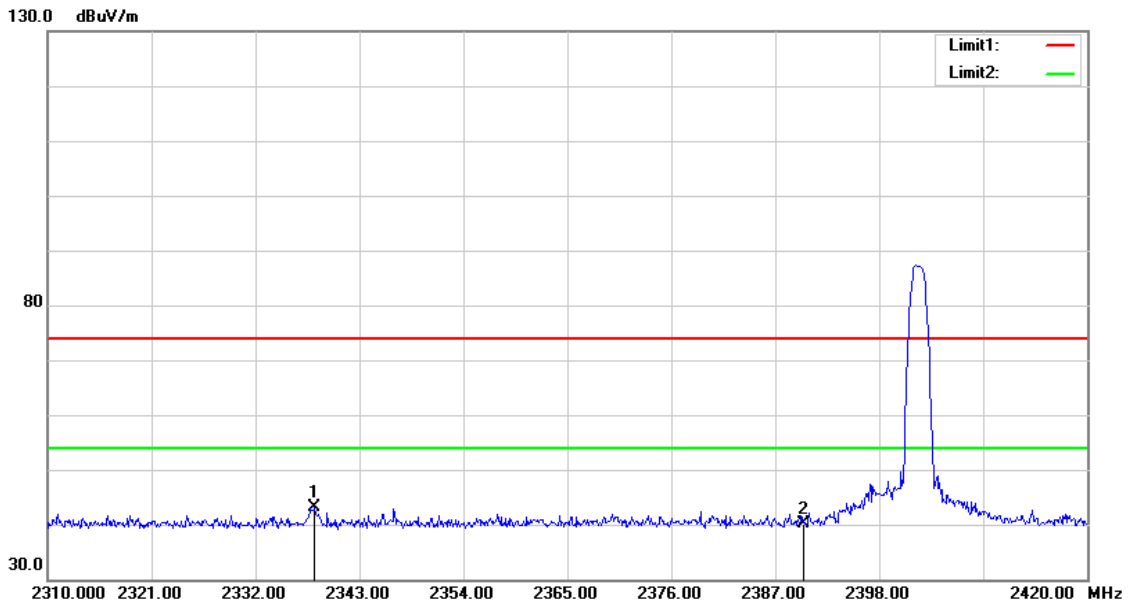

No.	Frequency (MHz)	Reading (dBuV)	Correct Factor (dB/m)	Result (dBuV/m)	Limit (dBuV/m)	Margin (dB)	Remark
1	2338.270	46.51	-3.48	43.03	74.00	-30.97	peak
2	2390.000	43.32	-3.30	40.02	74.00	-33.98	peak

Note:1.Result (dBuV/m) = Correct Factor (dB/m) + Reading(dBuV).

2.Correction factor (dB/m) = Antenna Factor (dB/m) + Cable loss (dB) – Pre-Amplifier gain (dB).

3. When the peak results are less than average limit, so not need to evaluate the average.

Standard:	FCC Part 15.247	Test Distance:	3m
Test item:	Band edge	Power:	AC 120V/60Hz
Frequency:	2480MHz	Temp.(℃)/Hum.(%RH):	26(℃)/60%RH
Mode:	Mode 2	Date:	11/10/2017
Ant.Polar.:	Horizontal		

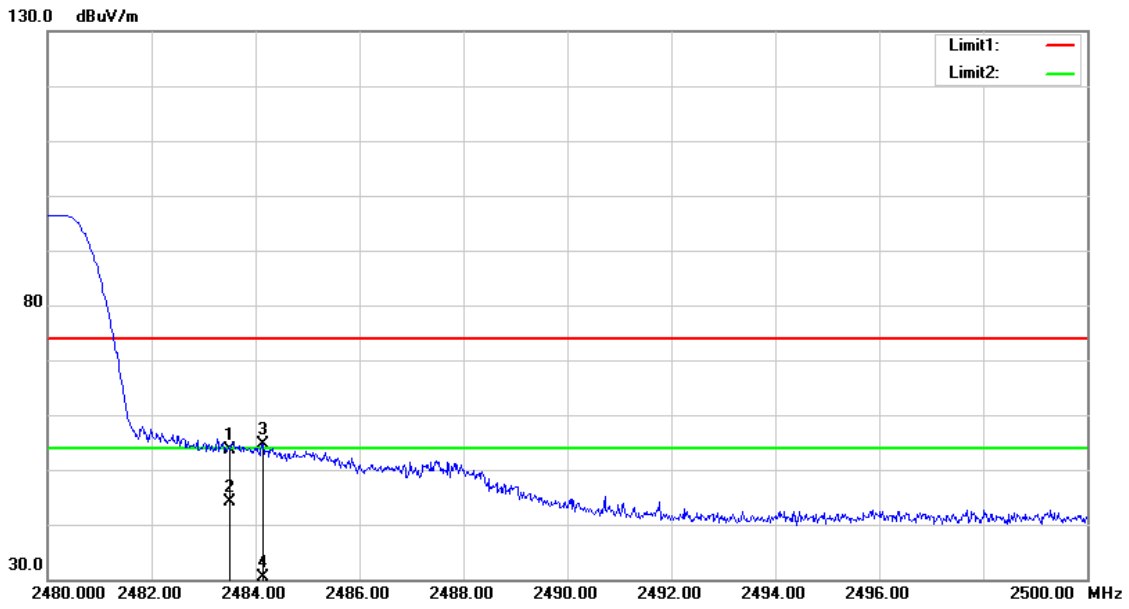

No.	Frequency (MHz)	Reading (dBuV)	Correct Factor (dB/m)	Result (dBuV/m)	Limit (dBuV/m)	Margin (dB)	Remark
1	2483.500	56.64	-2.93	53.71	74.00	-20.29	peak
2	2483.500	46.98	-2.93	44.05	54.00	-9.95	AVG
3	2484.140	57.47	-2.92	54.55	74.00	-19.45	peak
4	2484.140	33.23	-2.92	30.31	54.00	-23.69	AVG

Note:1.Result (dBuV/m) = Correct Factor (dB/m) + Reading(dBuV).

2.Correction factor (dB/m) = Antenna Factor (dB/m) + Cable loss (dB) – Pre-Amplifier gain (dB).

3. When the peak results are less than average limit, so not need to evaluate the average.

Standard:	FCC Part 15.247	Test Distance:	3m
Test item:	Band edge	Power:	AC 120V/60Hz
Frequency:	2480MHz	Temp.(℃)/Hum.(%RH):	26(℃)/60%RH
Mode:	Mode 2	Date:	11/10/2017
Ant.Polar.:	Vertical		

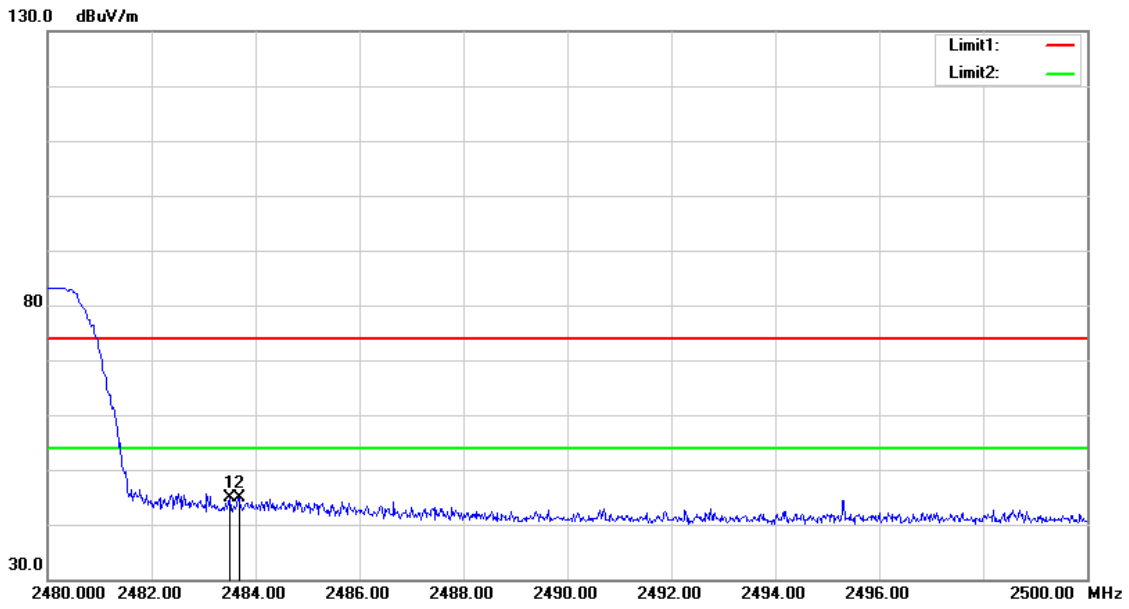

No.	Frequency (MHz)	Reading (dBuV)	Correct Factor (dB/m)	Result (dBuV/m)	Limit (dBuV/m)	Margin (dB)	Remark
1	2483.500	47.80	-2.93	44.87	74.00	-29.13	peak
2	2483.680	47.74	-2.93	44.81	74.00	-29.19	peak

Note:1.Result (dBuV/m) = Correct Factor (dB/m) + Reading(dBuV).

2.Correction factor (dB/m) = Antenna Factor (dB/m) + Cable loss (dB) – Pre-Amplifier gain (dB).

3. When the peak results are less than average limit, so not need to evaluate the average.

6 Maximum Conducted Output Power Measurement

■ Limit

For systems using digital modulation in the 2400-2483.5MHz, the limit for peak output power is 30dBm.

■ Test Setup

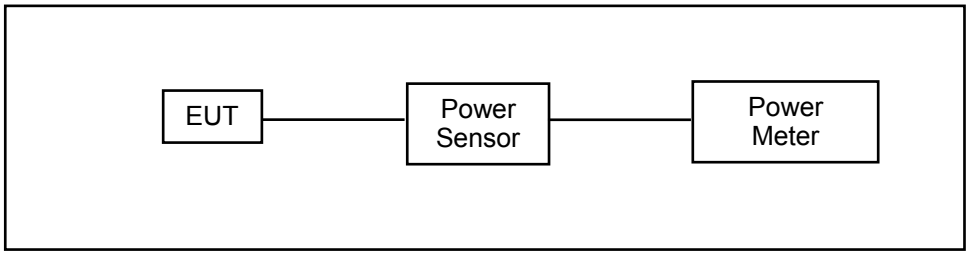

■ Test Procedure

The testing follows the Measurement Procedure of ANSI C63.10-2013 section 11.9.2.3 Method AVGPM.

The tests below are run with the EUT's transmitter set at high power in TX mode. The EUT is needed to force selection of output power level and channel number. While testing, EUT was set to transmit continuously. Remove the Subjective device's antenna and connect the RF output port to power sensor..

■ Test Result

Test Mode	Frequency (MHz)	Average Power		Peak Power		Limit (dBm)
		(dBm)	(W)	(dBm)	(W)	
Mode 2	2402	2.02	0.00159	**2.63**	**0.00183**	< 30
Mode 2	2440	1.38	0.00137	2.06	0.00161	< 30
Mode 2	2480	0.89	0.00123	1.43	0.00139	< 30

Note: The relevant measured result has the offset with cable loss already.

7 6dB RF Bandwidth Measurement

■ Limit

6dB RF Bandwidth: Systems using digital modulation techniques may operate in the 2400–2483.5 MHz bands. The minimum 6 dB band-width shall be at least 500 kHz.

99 % Occupied Bandwidth: N/A

■ Test Setup

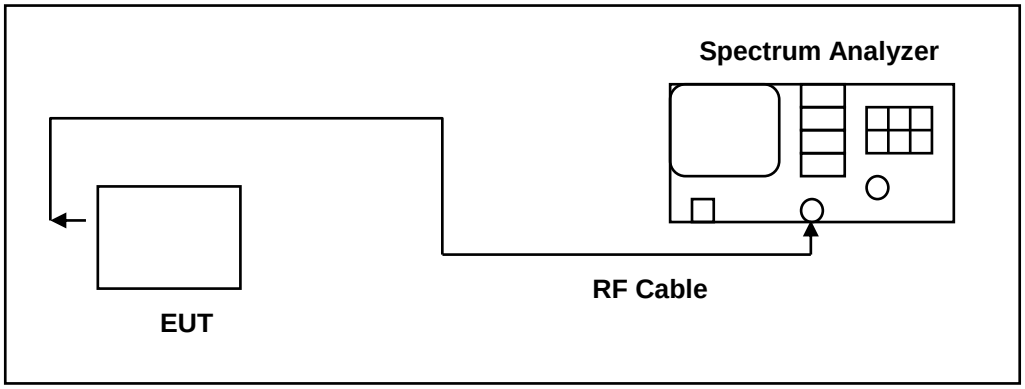

■ Test Procedure

The EUT tested to DTS test procedure of KDB558074D01 for compliance to FCC 47CFR 15.247 requirements.

6dB RF Bandwidth: The antenna port of the EUT was connected to the input of a spectrum analyzer. Analyzer RBW was set to 100 kHz. For each RF output channel investigated, the spectrum analyzer center frequency was set to the channel carrier. A peak output reading was taken, a DISPLAY line was drawn 6 dB lower than peak level. The 6 dB bandwidth was determined from where the channel output spectrum intersected the display line.

The test was performed at 3 channels (Channel low, middle, high)

■ Test Result

Test Mode	Frequency (MHz)	Measurement Results (kHz)	Limit (kHz)
Mode 2	2402	781.500	> 500
Mode 2	2440	790.400	> 500
Mode 2	2480	781.200	> 500

■ Test Graphs

Test Mode:	Mode 2
2402 MHz	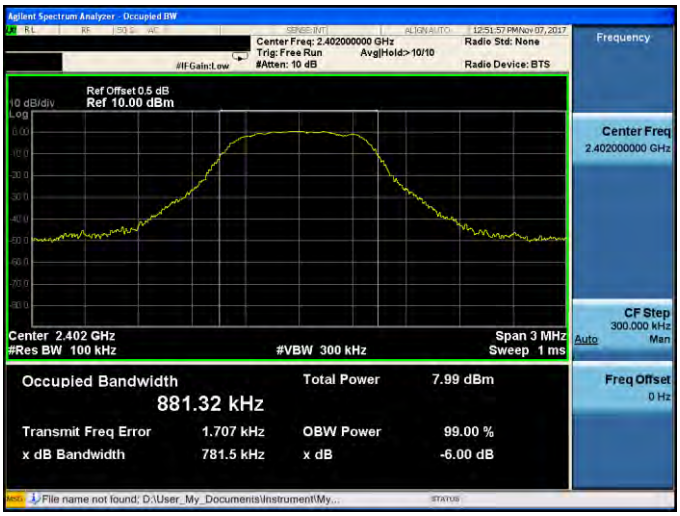
2440 MHz	
2480 MHz	

8 Maximum Power Density Measurement

■ Limit

For digitally modulated systems, the power spectral density conducted from the intentional radiator to the antenna shall not be greater than 8 dBm in any 3 kHz band during any time interval of continuous transmission.

■ Test Setup

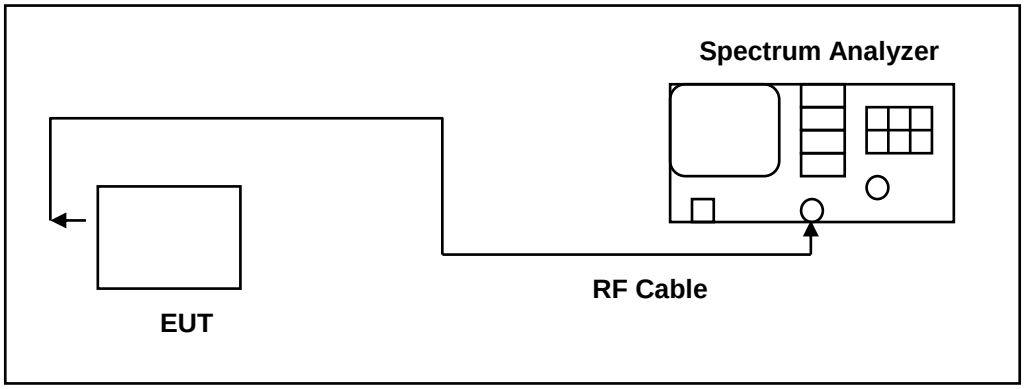

■ Test Procedure

The EUT tested to DTS test procedure of KDB558074D01 section 10.2 Method PKPSD for compliance to FCC 47CFR 15.247 requirements.

1. Set analyzer center frequency to DTS channel center frequency.
2. Set the span to 1.5 times the DTS bandwidth.
3. Set the RBW to: 3 kHz ≤ RBW ≤ 100 kHz.
4. Set the VBW ≥ 3 × RBW.
5. Detector = peak.
6. Sweep time = auto couple.
7. Trace mode = max hold.
8. Allow trace to fully stabilize.
9. Use the peak marker function to determine the maximum amplitude level within the RBW.
10. If measured value exceeds limit, reduce RBW (no less than 3 kHz) and repeat.

■ Test Result

Test Mode	Frequency (MHz)	Measurement Results (dBm/3KHz)	Limit (dBm)
Mode 2	2402	-11.823	< 8
Mode 2	2440	-12.761	< 8
Mode 2	2480	-13.588	< 8

■ Test Graphs

Test Mode:	Mode 2
2402 MHz	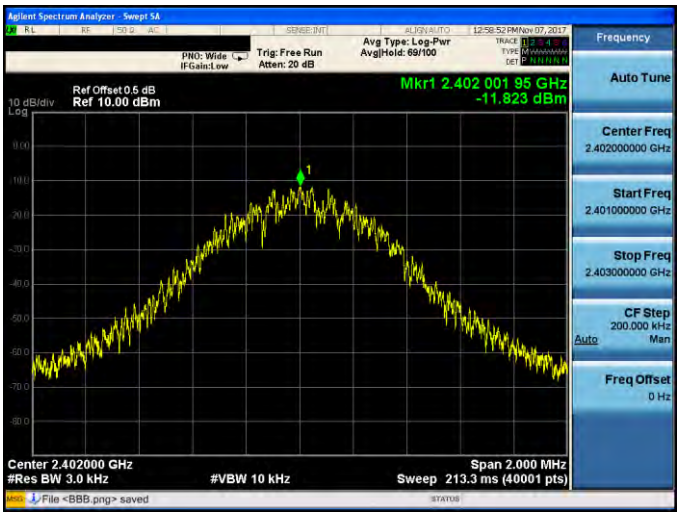
2440 MHz	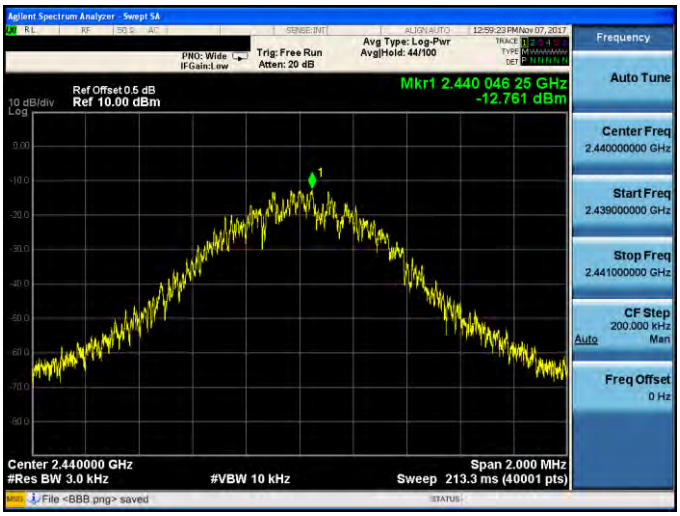
2480 MHz	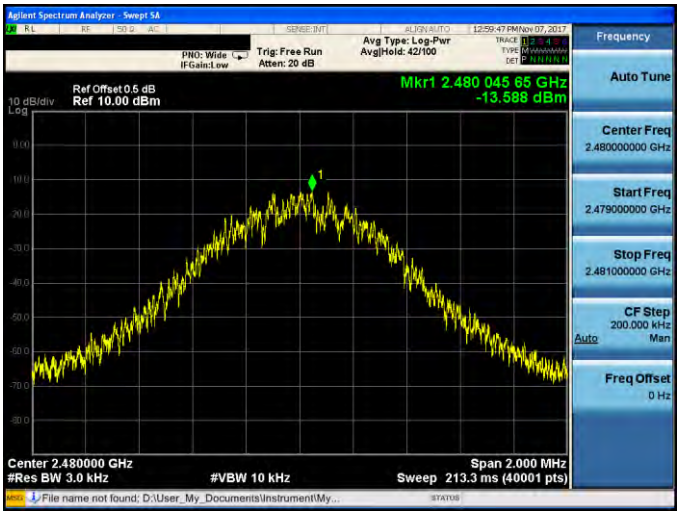

9 Out of Band Conducted Emissions Measurement

■ Limit

In any 100 kHz bandwidth outside the frequency band in which the spread spectrum or digitally modulated intentional radiator is operating, the radio frequency power that is produced by the intentional radiator shall be at least 20 dB below that in the 100 kHz bandwidth within the band that contains the highest level of the desired power

■ Test Setup

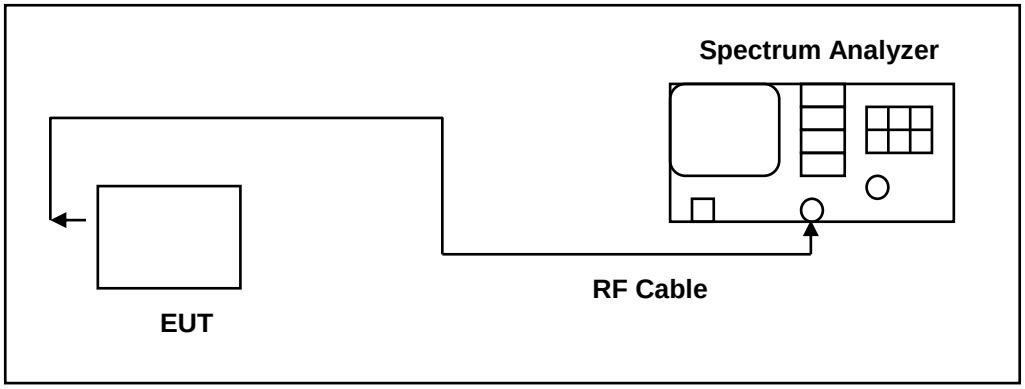

■ Test Procedure

In any 100 kHz bandwidth outside the EUT pass band, the RF power produced by the modulation products of the spreading sequence, the information sequence, and the carrier frequency shall be at least 20 dB below that of the maximum in-band 100 kHz emission, antenna output of the EUT was coupled directly to spectrum analyzer; if an external attenuator and/or cable was used, these losses are compensated for with the analyzer OFFSET function.

All other types of emissions from the EUT shall meet the general limits for radiated frequencies outside the pass band.

The test was performed at 3 channels.

■ Test Graphs

Reference level	
Test Mode:	Mode 2
2402 MHz	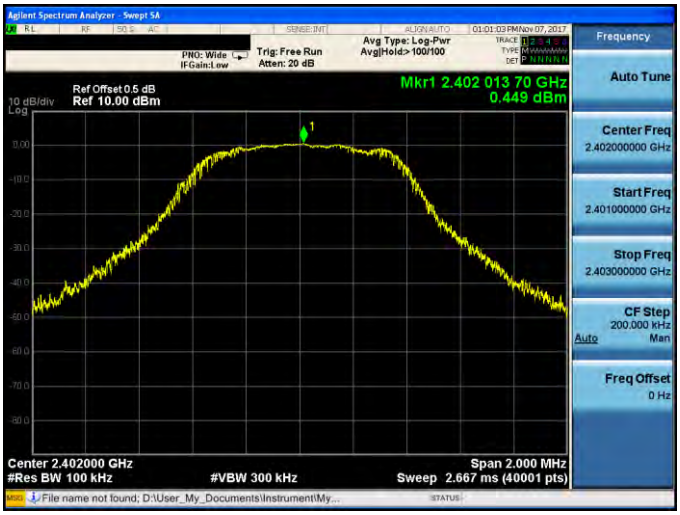
2440 MHz	
2480 MHz	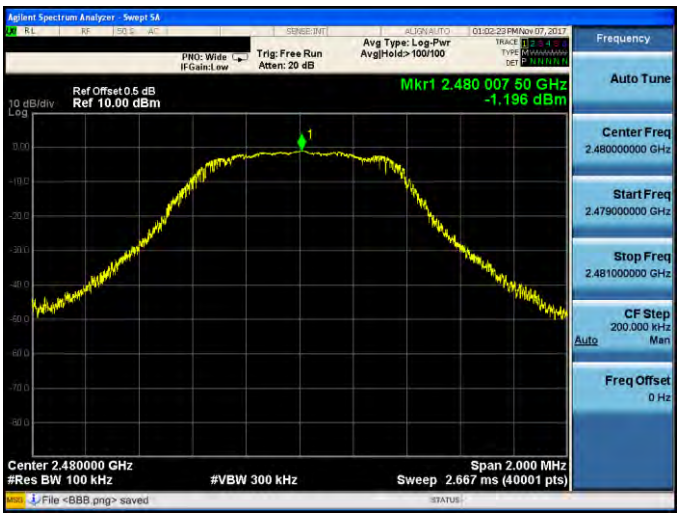

Out of Band Conducted Emissions	
Test Mode:	Mode 2
2402 MHz	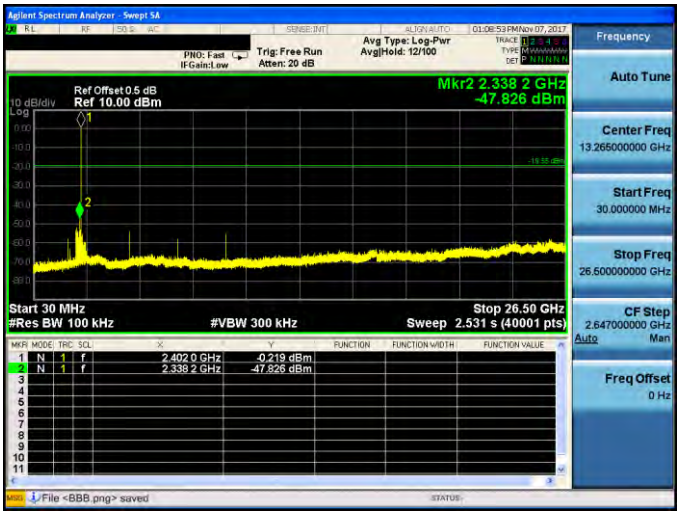
2440 MHz	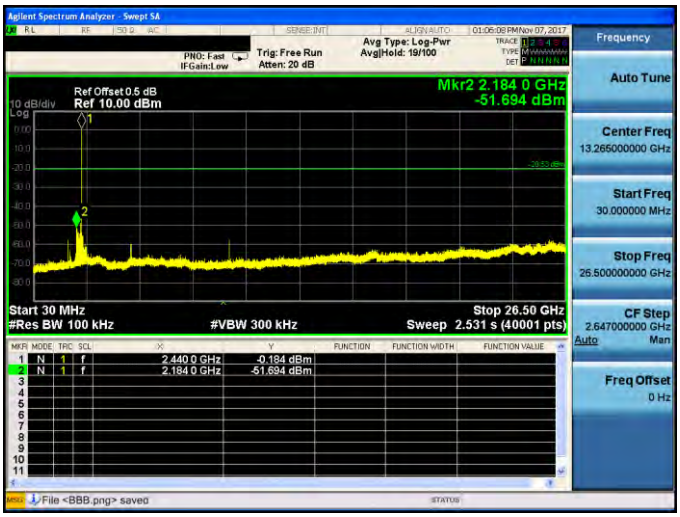
2480 MHz	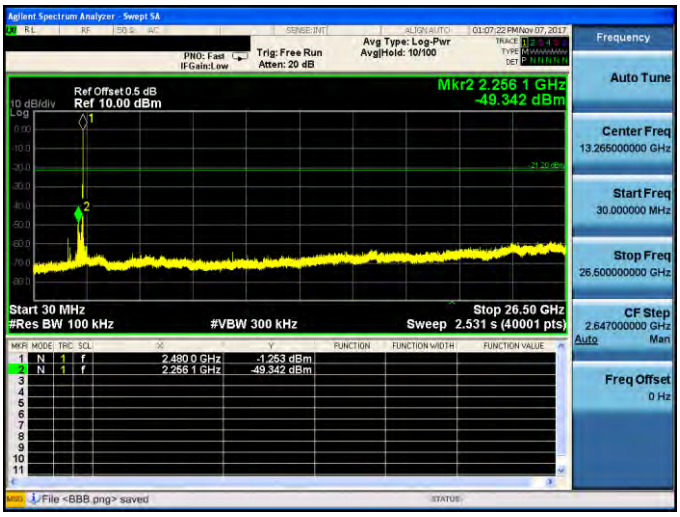

Conducted Band Edge	
Test Mode:	Mode 2
2402 MHz	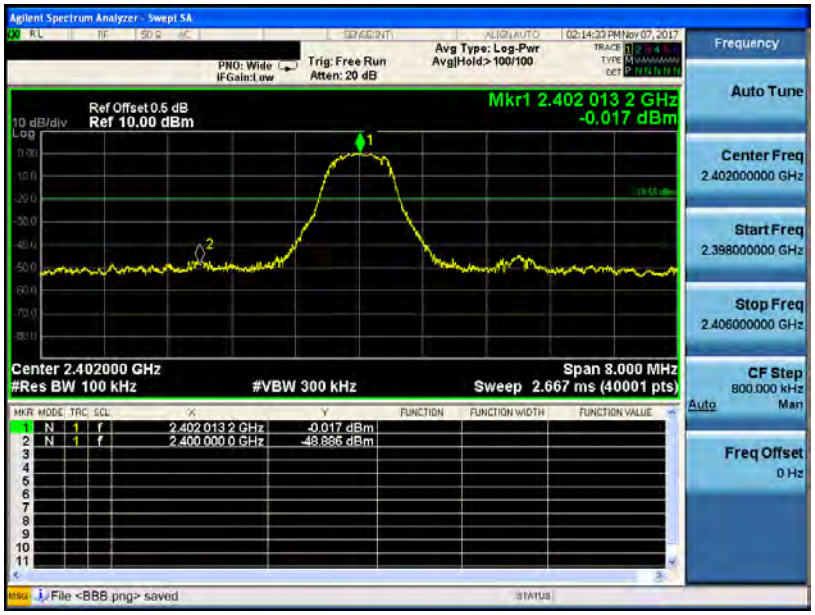
2480 MHz	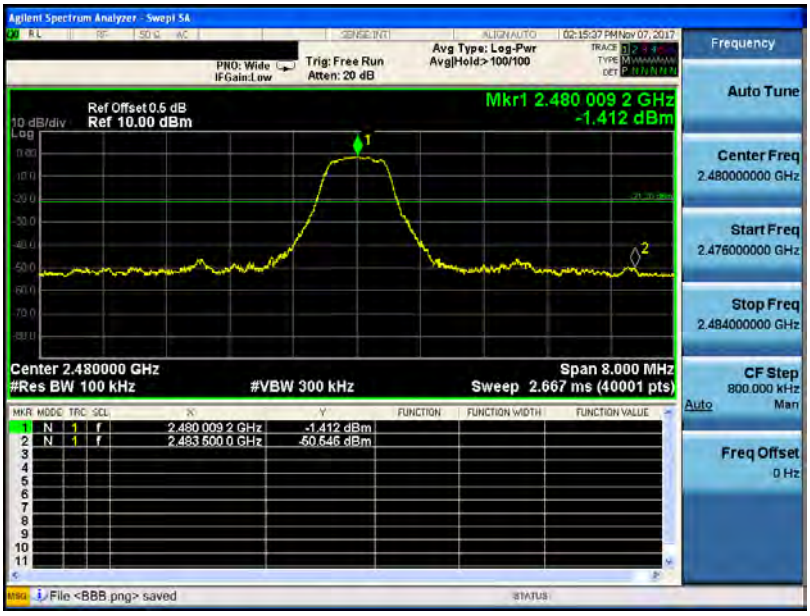

10 Antenna Measurement

■ Limit

For intentional device, according to 15.203, an intentional radiator shall be designed to ensure that no antenna other than that furnished by the responsible party shall be used with the device.

And According to 15.247 (b), if transmitting antennas of directional gain greater than 6 dBi are used, the power shall be reduced by the amount in dB that the directional gain of the antenna exceeds 6dBi.

■ Antenna Connector Construction

See section 2 – antenna information.