S T S L A B

RADIO TEST REPORT

Report No: STS1711176W01

Issued for

Fujian Crony Electronics Co.,Ltd.

Changxin Industrial Estate, Dongyuan Town, Quanzhou City, Fujian Province, China.

Product Name:	FRS/Public walkie talkie
Brand Name:	CRONY
Model Name:	T-358
Series Model:	N/A
FCC ID:	2AODKT-358
Test Standard:	FCC Part 95

Any reproduction of this document must be done in full. No single part of this document may be reproduced without permission from STS, All Test Data Presented in this report is only applicable to presented test sample.

Shenzhen STS Test Services Co., Ltd.
1/F., Building B, Zhuoke Science Park, No.190,Chongqing Road,
Fuyong Street, Bao'an District, Shenzhen, Guangdong,China
TEL: +86-755 3688 6288 FAX: +86-755 3688 6277 E-mail:sts@stsapp.com

TEST REPORT CERTIFICATION

Applicant's name .....: Fujian Crony Electronics Co.,Ltd.

Address .....: Changxin Industrial Estate, Dongyuan Town, Quanzhou City, Fujian Province, China.

Manufacture's Name..... : Fujian Crony Electronics Co.,Ltd.

Address ..... : Changxin Industrial Estate, Dongyuan Town, Quanzhou City, Fujian Province, China.

Product description

Product name ..... : FRS/Public walkie talkie

Brand name.....: CRONY

model Name ..... : T-358

Series model..... : N/A

Test Standards ..... : FCC Part 95

Test procedure.....: TIA-603-D-2010

This device described above has been tested by STS, the test results show that the equipment under test (EUT) is in compliance with the IC requirements. And it is applicable only to the tested sample identified in the report.

This report shall not be reproduced except in full, without the written approval of STS, this document may be altered or revised by STS, personal only, and shall be noted in the revision of the document.

Date of Test .....

Date of performance of tests..... 16 Nov. 2017 ~ 24 Nov 2017

Date of Issue ..... 27 Nov 2017

Test Result..... **Pass**

Testing Engineer : Sean She

(Sean she)

Technical Manager : Hakim. hou

(Hakim.hou)

Authorized Signatory : Vita Li

(Vita Li)

Table of Contents

1. SUMMARY OF TEST RESULTS 6

1.1 TEST FACTORY 7

1.2 MEASUREMENT UNCERTAINTY 7

2. GENERAL INFORMATION 8

2.1 GENERAL DESCRIPTION OF EUT 8

2.2 DESCRIPTION OF TEST MODES 10

2.3 BLOCK DIGRAM SHOWING THE CONFIGURATION OF SYSTEM TESTED 10

2.4 DESCRIPTION OF SUPPORT UNITS 11

2.5 EQUIPMENTS LIST FOR ALL TEST ITEMS 12

3. FIELD STRENGTHS AND RADIATED SPURIOUS EMISSION 13

3.1 RADIATED EMISSION LIMITS 13

3.2 TEST PROCEDURE 14

3.4 TEST RESULT 16

4. SPURIOUS EMISSION ON ANTENNA PORT 18

4.1 APPLIED PROCEDURES / LIMIT 18

4.2 TEST PROCEDURE 18

4.3 TEST SETUP 18

4.4 EUT OPERATION CONDITIONS 19

5. BANDWIDTH TEST 20

5.1 APPLIED PROCEDURES / LIMIT 20

5.2 TEST PROCEDURE 20

5.3 TEST SETUP 20

5.4 EUT OPERATION CONDITIONS 20

5.5 TEST RESULTS 21

6. TRANSMITTER OUTPUT POWER AND EFFECTIVE RADIATED POWER (E.R.P) 23

6.1 APPLIED PROCEDURES / LIMIT 23

6.2 TEST PROCEDURE 23

6.3 TEST SETUP 24

6.4 TEST RESULTS 24

7. EMISSION MASK 25

7.1 APPLIED PROCEDURES / LIMIT 25

7.2 TEST PROCEDURE 25

7.3 TEST SETUP 25

Table of Contents

7.4 EUT OPERATION CONDITIONS 25
7.5 TEST RESULT 26
8. FREQUENCY STABILITY 27
8.1 APPLIED PROCEDURES / LIMIT 27
8.2 TEST PROCEDURE 27
8.3 TEST SETUP 27
8.4 EUT OPERATION CONDITIONS 27
8.5 TEST RESULT 28
9. MODULATION LIMIT 29
9.1 APPLIED PROCEDURES / LIMIT 29
9.2 TEST PROCEDURE 29
9.3 TEST SETUP 29
9.4 TEST RESULT 30
10. AUDIO LOW PASS FILTER RESPONSE 32
10.1 APPLIED PROCEDURES / LIMIT 32
10.2 TEST PROCEDURE 32
10.3 TEST SETUP 32
10.4 TEST RESULT 33
11. AUDIO FREQUENCY RESPONSE 35
11.1 APPLIED PROCEDURES / LIMIT 35
11.2 TEST PROCEDURE 35
11.3 TEST SETUP 35
11.4 TEST SETUP 36
APPENDIX 1- PHOTOS OF TEST SETUP 38

Revision History

Rev.	Issue Date	Report NO.	Effect Page	Contents
00	27 Nov 2017	STS1711176W01	ALL	Initial Issue

1/F., Building B, Zhuoke Science Park, No.190,Chongqing Road, Fuyong Street, Bao'an District, Shenzhen, Guangdong,China
Tel: 0755-36886288 Fax: 0755-36886277 Http://www.stsapp.com E-mail: sts@stsapp.com

1. SUMMARY OF TEST RESULTS

Test procedures according to the technical standards:

FCC Part 95			
Standard Section	Test Item	Judgment	Remark
FCC Part 95.567	Transmitter Output Power and Effective Radiated Power (e.r.p)	PASS	--
FCC Part 95.573	Authorized Bandwidth	PASS	--
FCC Part 95.579	Emission Mask	PASS	--
FCC Part 95.579	Transmitter Radiated Spurious Emission	PASS	--
FCC Part 95.579	Spurious Emission On Antenna Port	PASS	--
FCC Part 95.565	Frequency Stability	PASS	--
FCC Part 95.575	Audio low pass filter response	PASS	--
FCC Part 95.575	Audio Frequency Response	PASS	--
FCC Part 95.575	Modulation Requirements	PASS	--

NOTE: (1)"N/A" denotes test is not applicable in this Test Report

(2) All tests are according to TIA-603-D-2010

1.1 TEST FACTORY

Shenzhen STS Test Services Co., Ltd.
Add. : 1/F., Building B, Zhuoke Science Park, No.190, Chongqing Road, Fuyong Street, Bao'an District, Shenzhen, Guangdong, China
CNAS Registration No.: L7649; FCC Registration No.: 625569
IC Registration No.: 12108A; A2LA Certificate No.: 4338.01;

1.2 MEASUREMENT UNCERTAINTY

The reported uncertainty of measurement **y** ± **U**，where expended uncertainty **U** is based on a standard uncertainty multiplied by a coverage factor of **k=2**，providing a level of confidence of approximately **95** %。

No.	Item	Uncertainty
1	Conducted Emission (9KHz-150KHz)	±2.88dB
2	Conducted Emission (150KHz-30MHz)	±2.67dB
3	RF power,conducted	±0.71dB
4	Spurious emissions,conducted	±0.63dB
5	All emissions,radiated(<1G) 30MHz-200MHz	±2.83dB
6	All emissions,radiated(<1G) 200MHz-1000MHz	±2.94dB
8	All emissions,radiated(>1G)	±3.03dB

2. GENERAL INFORMATION

2.1 GENERAL DESCRIPTION OF EUT

Product Name	FRS/Public walkie talkie	
Brand Name	CRONY	
Model Name	T-358	
Series Model	N/A	
Model Difference	N/A	
Operation Frequency Range:	FRS	462.5500MHz~462.7250MHz
		467.5625MHz~467.7125MHz
Modulation Type	FRS	FM
emission types	FRS	8K39F3E
Adapter	N/A	
Battery	Battery(rating): Rated Voltage: 1.5V*4=6V	
Hardware version number	V1.0	
Software version number	V1.0	
Connecting I/O Port(s)	Please refer to the User's Manual	

Note:

1. For a more detailed features description, please refer to the manufacturer's specifications or the User's Manual.

2. Table for filed Antenna

Ant.	Brand	Model Name	Antenna Type	Connector	Gain (dBi)	NOTE
1	CRONY	T-358	Integral Antenna	N/A	1.5	Antenna

The EUT antenna is internal Antenna. No antenna other than that furnished by the responsible party shall be used with the device.

3. Channel List

Channel	Frequency	Model	Channel	Frequency	Model
1	462.5625	FRS	12	467.6625	FRS
2	462.5875	FRS	13	467.6875	FRS
3	462.6125	FRS	14	467.7125	FRS
4	462.6375	FRS	15	462.5500	FRS
5	462.6625	FRS	16	462.5750	FRS
6	462.6875	FRS	17	462.6000	FRS
7	462.7125	FRS	18	462.6250	FRS
8	467.5625	FRS	19	462.6500	FRS
9	467.5875	FRS	20	462.6750	FRS
10	467.6125	FRS	21	462.7000	FRS
11	467.6375	FRS	22	462.7250	FRS

4. Test channel

Operation Mode	Channel Separation (kHz)	Test Channel	Test Frequency (MHz)
FRS	12.5	CH18	462.6250
	25	CH11	467.6375

2.2 DESCRIPTION OF TEST MODES

To investigate the maximum EMI emission characteristics generates from EUT, the test system was pre-scanning tested base on the consideration of following EUT operation mode or test configuration mode which possible have effect on EMI emission level. Each of these EUT operation mode(s) or test configuration mode(s) mentioned above was evaluated respectively.

Pretest Mode	Description
Mode 1	FRS CH18 TX Mode
Mode 2	FRS CH11 TX Mode

	For Radiated Emission
Final Test Mode	Description
Mode 1	FRS CH18 TX Mode
Mode 2	FRS CH11 TX Mode

2.3 BLOCK DIGRAM SHOWING THE CONFIGURATION OF SYSTEM TESTED

During test, Keep EUT is in continuous transmission mode, Both open button and closed button have been tested, The two keys were tested to assess and only record the worst case in the report(Open botton).

E-1
EUT

2.4 DESCRIPTION OF SUPPORT UNITS

The EUT has been tested as an independent unit together with other necessary accessories or support units. The following support units or accessories were used to form a representative test configuration during the tests.

Item	Equipment	Mfr/Brand	Model/Type No.	Serial No.	Note
N/A	N/A	N/A	N/A	N/A	N/A

Item	Shielded Type	Ferrite Core	Length	Note
N/A	N/A	N/A	N/A	N/A

Note:

(1)The support equipment was authorized by Declaration of Confirmation.

(2)For detachable type I/O cable should be specified the length in cm in 『Length』 column.

2.5 EQUIPMENTS LIST FOR ALL TEST ITEMS

Radiation Test equipment

Kind of Equipment	Manufacturer	Type No.	Serial No.	Last calibration	Calibrated until
Test Receiver	R&S	ESCI	101427	2017.10.15	2018.10.14
Bilog Antenna	TESEQ	CBL6111D	34678	2017.03.24	2018.03.23
Horn Antenna	Schwarzbeck	BBHA 9120D(1201)	9120D-1343	2017.03.06	2018.03.05
Loop Antenna	EMCO	6502	9003-2485	N/A	N/A
Pre-mplifier (0.1M-3GHz)	EM	EM330	60538	2017.03.12	2018.03.11
PreAmplifier (1G-26.5GHz)	Agilent	8449B	60538	2017.10.15	2018.10.14
Low frequency cable	EM	R01	N/A	2017.03.12	2018.03.11
Low frequency cable	EM	R06	N/A	2017.03.12	2018.03.11
High frequency cable	SCHWARZBECK	AK9515H	SN-96286/96287	2017.03.12	2018.03.11
Semi-anechoic chamber	Changling	966	N/A	2017.10.15	2018.10.14
Signal Analyzer	Agilent	N9020A	MY49100060	2017.03.11	2018.03.10
RF COMMUNICATION TEST SET	HP	N8920A	348A05658	2017.10.15	2018.10.14

Note: The temporary antenna connector is soldered on the PCB board in order to perform conducted tests and this temporary antenna connector is listed in the equipment list.

3. FIELD STRENGTHS AND RADIATED SPURIOUS EMISSION

3.1 RADIATED EMISSION LIMITS

In measuring unwanted emissions, the spectrum shall be investigated from 30 MHz or the lowest radio frequency signal generated in the equipment, whichever is lower, without going below 9 kHz, up to at least the frequency given below:
(a) If the equipment operates below 10 GHz to the tenth harmonic of the highest fundamental frequency or to 40 GHz, whichever is lower.
(b) If the equipment operates at or above 10 GHz: to the fifth harmonic of the highest fundamental frequency or to 100 GHz, whichever is lower.
Particular attention should be paid to harmonics and sub-harmonics of the carrier frequency, as well as to those frequencies removed from the carrier by multiples of the oscillator frequency.
Radiation at the frequencies of multiplier stages should also be checked.
The amplitude of spurious emissions attenuated more than 20 dB below the permissible value need not be reported.
43 + 10 log (Pwatts)
Calculation: Limit (dBm) =EL-43-10log10 (TP)
Notes: EL is the emission level of the Output Power expressed in dBm,
In this application, the EL is P(dBm).
Limit (dBm) = P(dBm)-43-10 log (Pwatts) = -13 dBm

Spectrum Parameter	Setting
Detector	Peak
Attenuation	Auto
Start Frequency	30 MHz
Stop Frequency	10th carrier harmonic

3.2 TEST PROCEDURE

1. EUT was placed on a 1.5 meter high non-conductive stand at a 3 meter test distance from the receive antenna. A receiving antenna was placed on the antenna mast 3 meters from the EUT for emission measurements. The height of receiving antenna is 1. 0 m. Detected emissions were maximized at each frequency by rotating the EUT through 360° and adjusting the receiving antenna polarization. The radiated emission measurements of all transmit frequencies in three channels were measured with peak detector.
2. A log-periodic antenna or double-ridged waveguide horn antenna shall be substituted in place of the EUT. The log-periodic antenna will be driven by a signal generator and the level will be adjusted till the same power value on the spectrum analyzer or receiver. The level of the spurious emissions can be calculated through the level of the signal generator, cable loss, the gain of the substitution antenna and the reading of the spectrum analyzer or receiver.
3. The EUT is then put into continuously transmitting mode at its maximum power level during the test.Set Test Receiver or Spectrum RBW=1MHz,VBW=3MHz for above 1GHz and BW=100kHz,VBW=300kHz for 30MHz to 1GHz, And the maximum value of the receiver should be recorded as (Pr).
4. The EUT shall be replaced by a substitution antenna. In the chamber, an substitution antenna for the frequency band of interest is placed at the reference point of the chamber. An RF Signal source for the frequency band of interest is connected to the substitution antenna with a cable that has been constructed to not interfere with the radiation pattern of the antenna. A power (P_{Mea}) is applied to the input of thesubstitution antenna, and adjust the level of the signal generator output until the value of the receiver reach the previously recorded (Pr). The power of signal source (P_{Mea}) is recorded. The test should be performed by rotating the test item and adjusting the receiving antenna polarization.
5. A amplifier should be connected to the Signal Source output port. And the cable should be connect between the Amplifier and the Substitution Antenna. The cable loss (Pcl) ,the Substitution Antenna Gain (Ga) and the Amplifier Gain (PAg) should be recorded after test. The measurement results are obtained as described below:
   Power(EIRP)=P_{Mea}- P_{Ag} - P_{cl} + G_a
   We used signal generator which signal level can up to 33dBm,so we not used power Amplifier for substituation test; The measurement results are amend as described below:
   Power(EIRP)=P_{Mea}- P_{cl} +G_a
6. This value is EIRP since the measurement is calibrated using an antenna of known gain (2.15 dBi) and known input power
7. ERP can be calculated from EIRP by subtracting the gain of the dipole, ERP = EIRP-2.15dBi

3.3 TEST SETUP

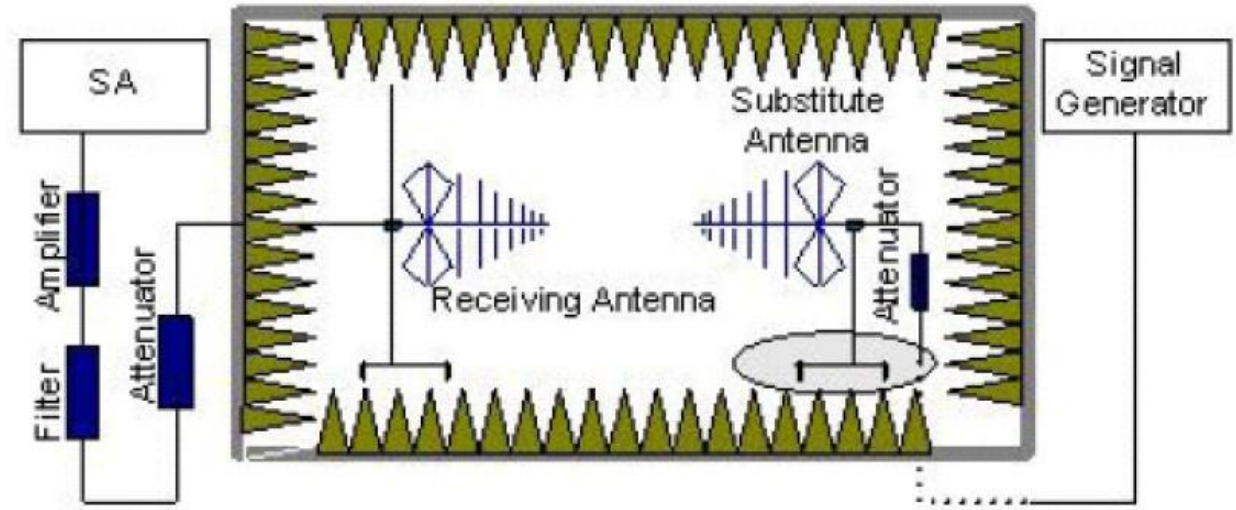

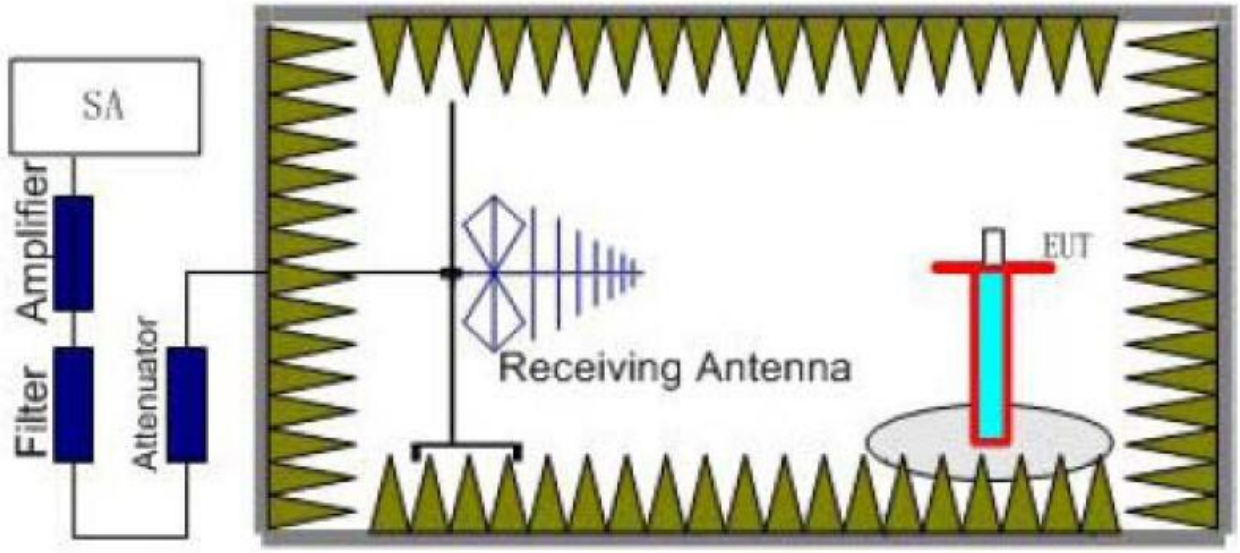

4.5 EUT OPERATING CONDITIONS

The EUT tested system was configured as the statements of 2.4 Unless otherwise a special operating condition is specified in the follows during the testing.

3.4 TEST RESULT

Temperature：	26 ℃	Relative Humidity：	60%
Pressure：	1010hPa	Phase：	N/A
Test Mode：	Mode 1		

462.6250MHz-FRS								
Frequency	Meter Reading	Loss	Antenna Factor	Orrected Factor	Corrected Amplitude			RX Antenna
						Limit	Margin	Polar
(MHz)	(dBμV/m)	（dB）	（dB/m）	（dB）	(dBμV/m)	(dBμV/m)	(dB)	(H/V)
49.248	-45.27	1.71	16.61	14.90	-30.37	-13	-17.37	H
49.248	-44.48	1.71	16.61	14.90	-29.58	-13	-16.58	V
316.983	-41.54	2.89	18.23	15.34	-26.20	-13	-13.20	H
316.983	-40.73	2.89	18.23	15.34	-25.39	-13	-12.39	V
925.658	-39.18	4.12	19.56	15.44	-23.74	-13	-10.74	H
925.658	-38.36	4.12	19.56	15.44	-22.92	-13	-9.92	V
1388.276	-44.41	6.83	21.26	14.43	-29.98	-13	-16.98	H
1388.276	-43.58	6.83	21.26	14.43	-29.15	-13	-16.15	V
2746.780	-45.17	7.95	28.35	20.40	-24.77	-13	-11.77	H
2746.780	-44.38	7.95	28.35	20.40	-23.98	-13	-10.98	V
4212.597	-46.56	8.12	30.29	22.17	-24.39	-13	-11.39	H
4212.597	-45.76	8.12	30.29	22.17	-23.59	-13	-10.59	V

Temperature：	26 ℃	Relative Humidity：	60%
Pressure：	1010hPa	Phase：	N/A
Test Mode：	Mode 2		

467.6375MHz-FRS								
Frequency	Meter Reading	Loss	Antenna Factor	Orrected Factor	Corrected Amplitude			RX Antenna
						Limit	Margin	Polar
(MHz)	(dBμV/m)	（dB）	（dB/m）	（dB）	(dBμV/m)	(dBμV/m)	(dB)	(H/V)
49.705	-45.32	1.71	16.61	14.90	-30.42	-13	-17.42	H
49.705	-45.09	1.71	16.61	14.90	-30.19	-13	-17.19	V
317.098	-41.53	2.89	18.23	15.34	-26.19	-13	-13.19	H
317.098	-41.35	2.89	18.23	15.34	-26.01	-13	-13.01	V
935.834	-39.15	4.12	19.56	15.44	-23.71	-13	-10.71	H
935.834	-38.94	4.12	19.56	15.44	-23.50	-13	-10.50	V
1403.733	-44.42	6.83	21.26	14.43	-29.99	-13	-16.99	H
1403.733	-44.21	6.83	21.26	14.43	-29.78	-13	-16.78	V
2748.785	-45.17	7.95	28.35	20.40	-24.77	-13	-11.77	H
2748.785	-44.97	7.95	28.35	20.40	-24.57	-13	-11.57	V
4213.216	-46.56	8.12	30.29	22.17	-24.39	-13	-11.39	H
4213.216	-46.37	8.12	30.29	22.17	-24.20	-13	-11.20	V

4. SPURIOUS EMISSION ON ANTENNA PORT

4.1 APPLIED PROCEDURES / LIMIT

43 + 10 log (Pwatts)
Calculation: Limit (dBm) =EL-43-10log10 (TP)
Notes: EL is the emission level of the Output Power expressed in dBm,
In this application, the EL is P(dBm).
Limit (dBm) = P(dBm)-43-10 log (Pwatts) = -13 dBm

4.2 TEST PROCEDURE

1. The EUT was modulated by 2.5kHz sine wave audio signal; the level of the audio signal employed is 16dB greater than that necessary to produce 50% of rated system deviation. Rated system deviation is 2.5kHz and 5kHz).
2. Spectrum set as follow:
Centre frequency = fundamental frequency, span=50kHz,
RBW=100Hz, VBW=300Hz, Sweep = auto,Detector function = peak, Trace = max hold
3. Set 99% Occupied Bandwidth and 26dB Occupied Bandwidth
4. Measure and record the results in the test report.

4.3 TEST SETUP

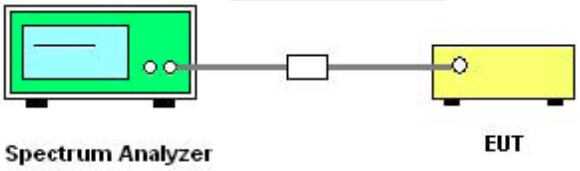

4.4 EUT OPERATION CONDITIONS

TX mode.

CH18

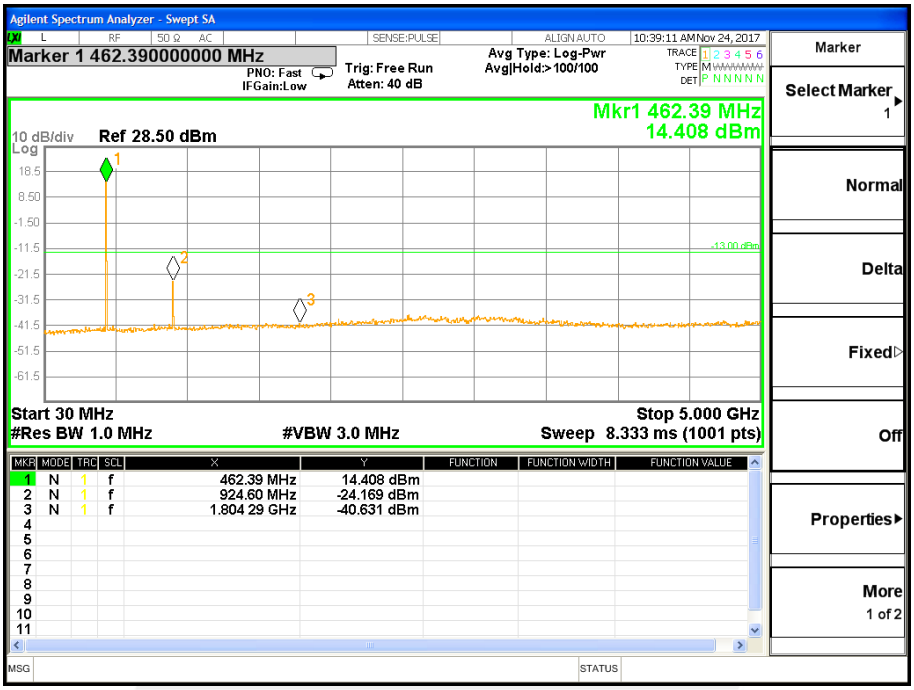

CH11

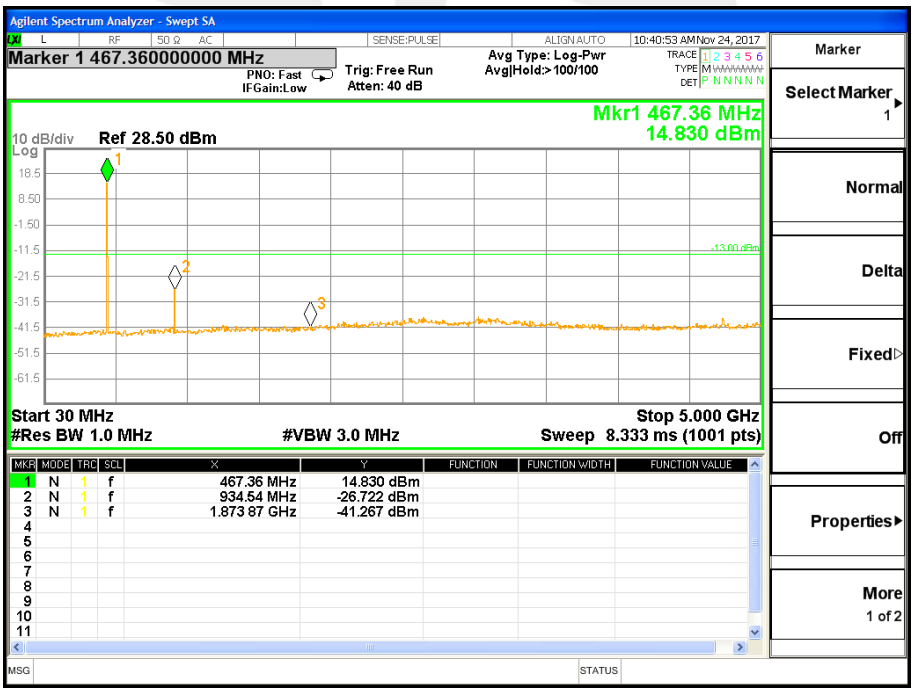

5. BANDWIDTH TEST

5.1 APPLIED PROCEDURES / LIMIT

FRS:
The authorized bandwidth for an FRS unit is 12.5 kHz..

5.2 TEST PROCEDURE

1. The EUT was modulated by 2.5kHz sine wave audio signal; the level of the audio signal employed is 16dB greater than that necessary to produce 50% of rated system deviation. Rated system deviation is 2.5kHz and 5kHz).
2. Spectrum set as follow:
Centre frequency = fundamental frequency, span=50kHz,
RBW=100Hz, VBW=300Hz, Sweep = auto,Detector function = peak, Trace = max hold
3. Set 99% Occupied Bandwidth and 26dB Occupied Bandwidth
4. Measure and record the results in the test report.

5.3 TEST SETUP

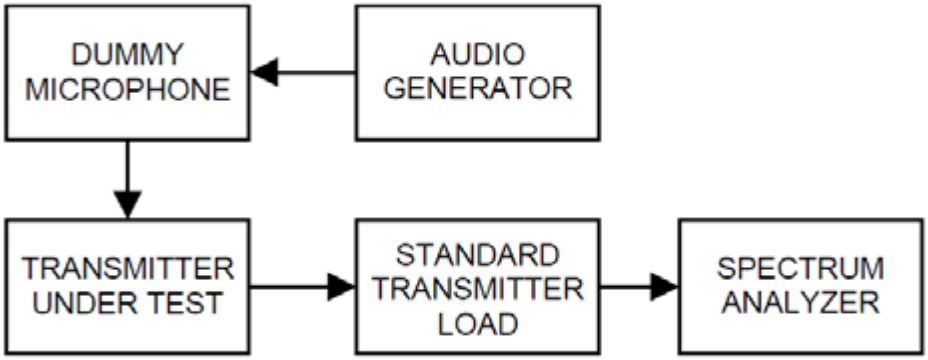

5.4 EUT OPERATION CONDITIONS

TX mode.

5.5 TEST RESULTS

Operation Mode	Test Channel	Occupied Bandwidth(KHz)		Limit(kHz)	Result
		99%	26dB		
FRS	CH18	8.351	10.560	≤12.5	Pass
FRS	CH11	8.386	10.51	≤12.5	Pass

CH18

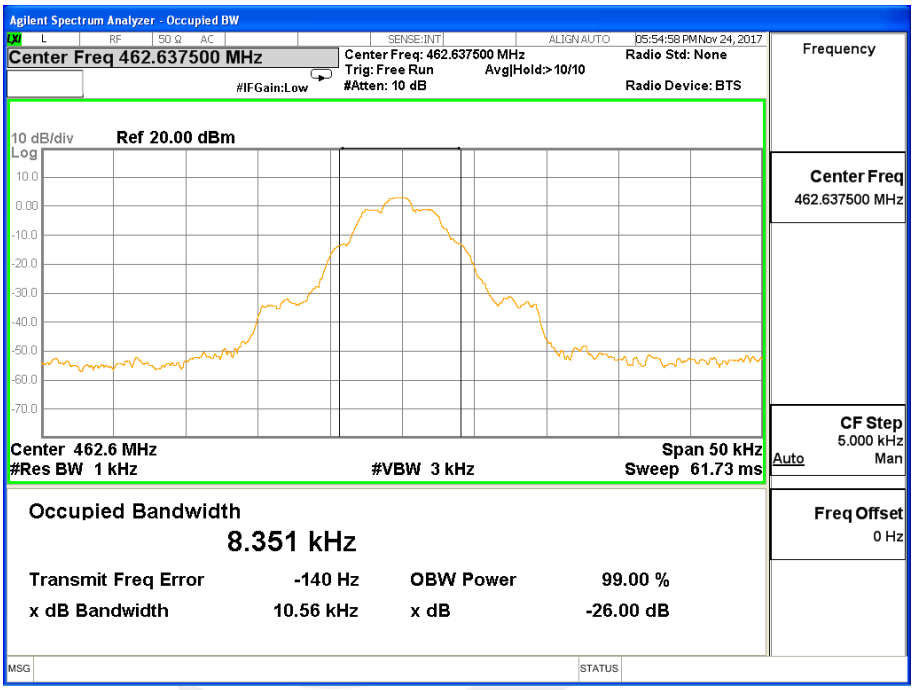

CH11

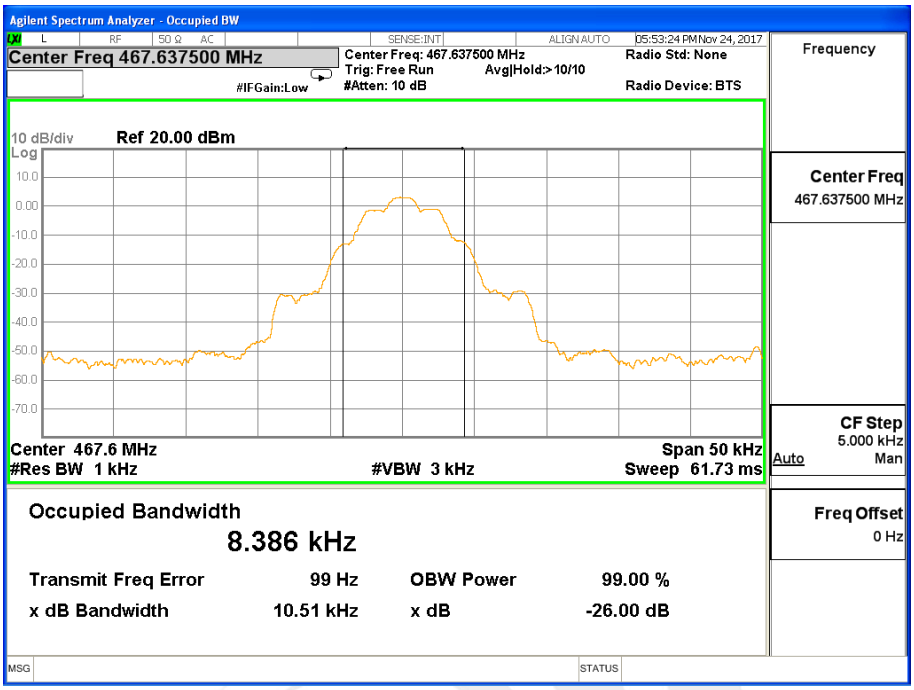
Agilent Spectrum Analyzer - Occupied BW
Center Freq 467.637500 MHz
Center Freq: 467.637500 MHz
Trig: Free Run
Avg|Hold:>10/10
#Atten: 10 dB
#IFGain:Low
Radio Std: None
Radio Device: BTS
05:53:24 PM Nov 24, 2017
Frequency
10 dB/div
Ref 20.00 dBm
Log
10.0
0.00
-10.0
-20.0
-30.0
-40.0
-50.0
-60.0
-70.0
Center Freq
467.637500 MHz
Center 467.6 MHz
#Res BW 1 kHz
#VBW 3 kHz
Span 50 kHz
Sweep 61.73 ms
CF Step
5.000 kHz
Auto
Man
Occupied Bandwidth
8.386 kHz
Freq Offset
0 Hz
Transmit Freq Error 99 Hz
OBW Power 99.00 %
x dB Bandwidth 10.51 kHz
x dB -26.00 dB
MSG
STATUS

6. TRANSMITTER OUTPUT POWER AND EFFECTIVE RADIATED POWER (E.R.P)

6.1 APPLIED PROCEDURES / LIMIT

FRS:

The maximum permissible transmitted ERP of the equipment under any operating conditions shall not exceed 0.5 W

6.2 TEST PROCEDURE

1. EUT was placed on a 1.5 meter high non-conductive stand at a 3 meter test distance from the receive antenna. A receiving antenna was placed on the antenna mast 3 meters from the EUT for emission measurements. The height of receiving antenna is 1. 0 m. Detected emissions were maximized at each frequency by rotating the EUT through 360° and adjusting the receiving antenna polarization. The radiated emission measurements of all transmit frequencies in three channels were measured with peak detector.
2. A log-periodic antenna or double-ridged waveguide horn antenna shall be substituted in place of the EUT. The log-periodic antenna will be driven by a signal generator and the level will be adjusted till the same power value on the spectrum analyzer or receiver. The level of the spurious emissions can be calculated through the level of the signal generator, cable loss, the gain of the substitution antenna and the reading of the spectrum analyzer or receiver.
3. The EUT is then put into continuously transmitting mode at its maximum power level during the test.Set Test Receiver or Spectrum RBW=1MHz,VBW=3MHz for above 1GHz and BW=100kHz,VBW=300kHz for 30MHz to 1GHz, And the maximum value of the receiver should be recorded as (Pr).
4. The EUT shall be replaced by a substitution antenna. In the chamber, an substitution antenna for the frequency band of interest is placed at the reference point of the chamber. An RF Signal source for the frequency band of interest is connected to the substitution antenna with a cable that has been constructed to not interfere with the radiation pattern of the antenna. A power (P_{Mea}) is applied to the input of thesubstitution antenna, and adjust the level of the signal generator output until the value of the receiver reach the previously recorded (Pr). The power of signal source (P_{Mea}) is recorded. The test should be performed by rotating the test item and adjusting the receiving antenna polarization.
5. A amplifier should be connected to the Signal Source output port. And the cable should be connect between the Amplifier and the Substitution Antenna. The cable loss (Pcl) ,the Substitution Antenna Gain (Ga) and the Amplifier Gain (PAg) should be recorded after test. The measurement results are obtained as described below:
   Power(EIRP)=P_{Mea}- P_{Ag} - P_{cl} + G_a
   We used signal generator which signal level can up to 33dBm,so we not used power Amplifier for substituation test; The measurement results are amend as described below:
   Power(EIRP)=P_{Mea}- P_{cl} +G_a
6. This value is EIRP since the measurement is calibrated using an antenna of known gain (2.15 dBi) and known input power
7. ERP can be calculated from EIRP by subtracting the gain of the dipole, ERP = EIRP-2.15dBi

6.3 TEST SETUP

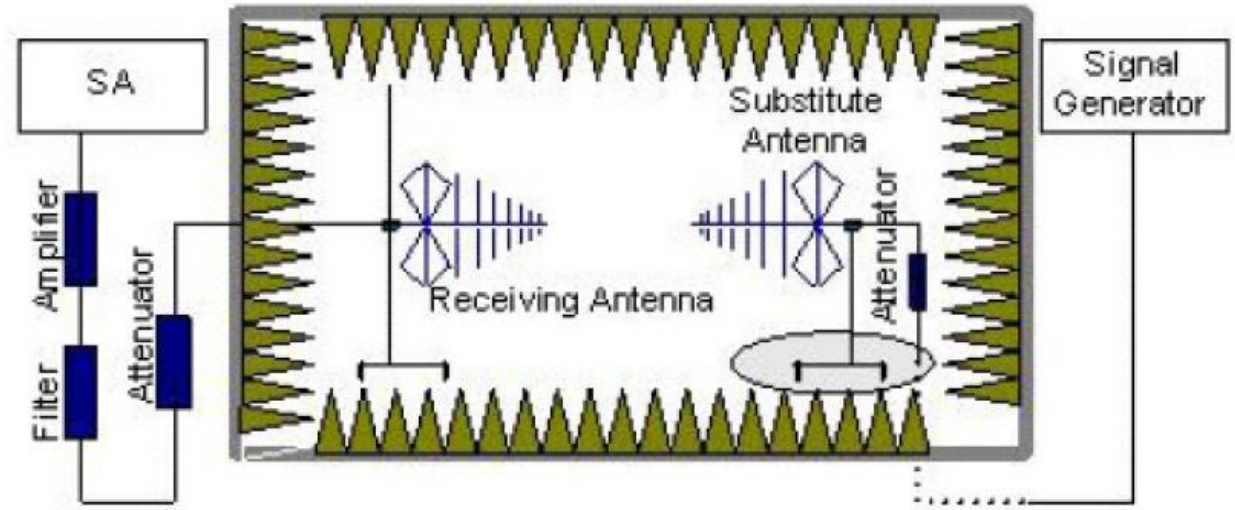

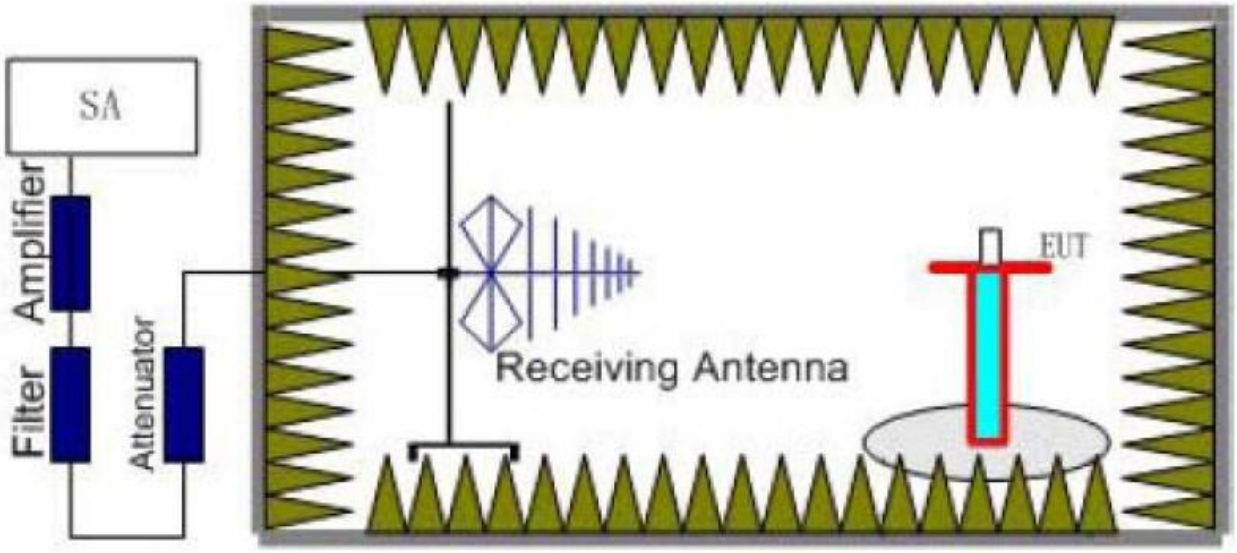

6.4 TEST RESULTS

Operation Mode	Test Channel	polarity	Measured ERP (dBm)	Limit (dBm)	Result
FRS	CH18	Horizontal	16.654	33.01	Pass
		Vertical	17.792	33.01	Pass
FRS	CH11	Horizontal	15.939	27.00	Pass
		Vertical	17.182	27.00	Pass

7. EMISSION MASK

7.1 APPLIED PROCEDURES / LIMIT

FRS:

a. 25 dB, measured with a bandwidth of 300 Hz, in the band 6.25 kHz to 12.5 kHz removed from the channel centre frequency;
b. 35 dB, measured with a bandwidth of 300 Hz, in the band 12.5 kHz to 31.25 kHz removed from the channel centre frequency; and
c. 43 dB + 10 $\log_{10}$ (transmitter power in watts) dB, measured with a bandwidth of 30 kHz for frequencies beyond 31.25 kHz removed from the channel centre frequency.

7.2 TEST PROCEDURE

1. Connect the equipment as illustrated
2. Spectrum set as follow:
Centre frequency = fundamental frequency, span=125kHz for 12.5kHz channel spacing, RBW=300Hz, VBW=1000Hz, Sweep = auto,
Detector function = peak, Trace = max hold
3. Key the transmitter, and set the level of the unmodulated carrier to a full scale reference line. This is the 0dB reference for the measurement
4. Modulate the transmitter with a 2500 Hz sine wave at an input level 16 dB greater than that necessary to produce 50% of rated system deviation(Rated system deviation is 2.5 kHz for 12.5kHz channel spacing). The input level shall be established at the frequency of maximum response of the audio modulating circuit. Transmitters employing digital modulation techniques that bypass the limiter and the audio low-pass filter shall be modulated as specified by the manufacturer
5. Measure and record the results in the test report

7.3 TEST SETUP

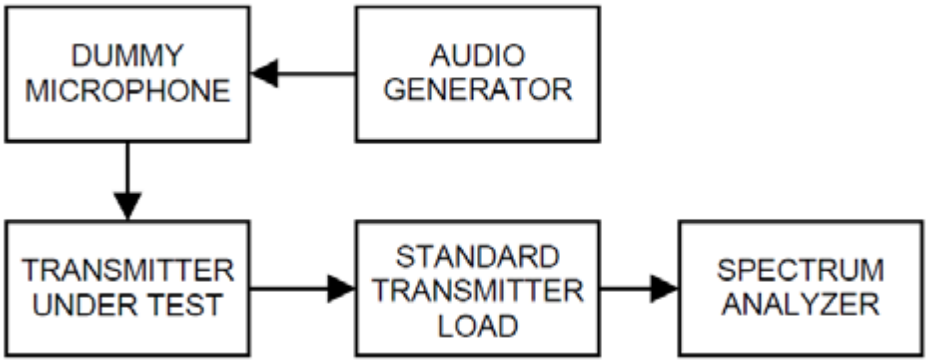

7.4 EUT OPERATION CONDITIONS

TX mode.

7.5 TEST RESULT

CH18

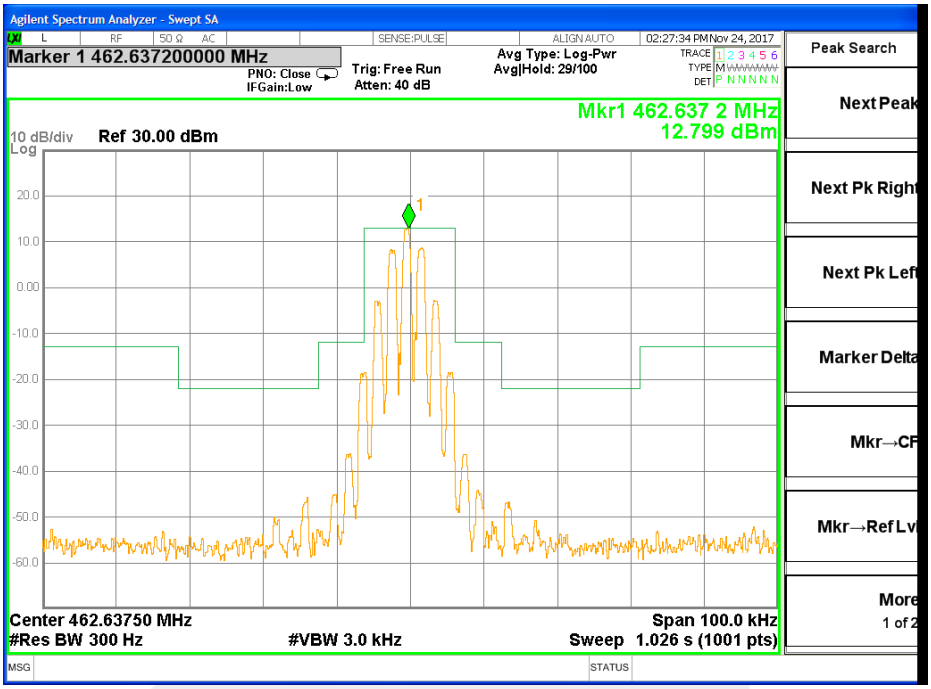

CH11

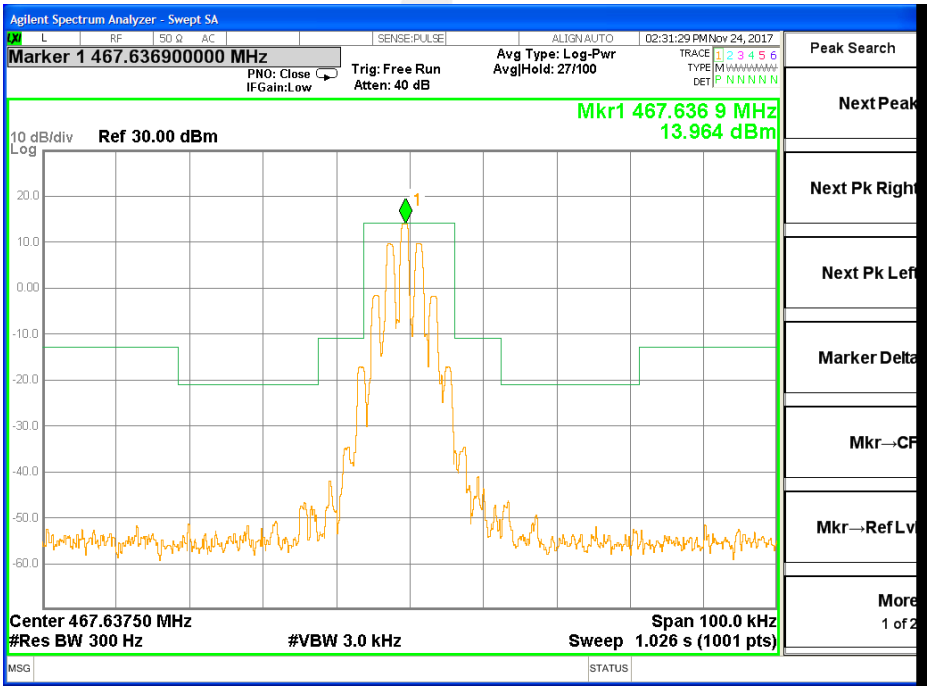

8. FREQUENCY STABILITY

8.1 APPLIED PROCEDURES / LIMIT

The carrier frequency stability shall be better than ±5 ppm

8.2 TEST PROCEDURE

1. The frequency stability shall be measured with variation of ambient temperature from -30℃ to +50℃
2. For battery powered equipment, the frequency stability shall be measured with reducing primary supply voltage to the battery operating end point, which is specified by the manufacture.
3. Vary primary supply voltage from 3.06V to 4.14V.
4. The EUT was set in the climate chamber and connected to an external DC power supply. The RF output was directly connected to Spectrum Analyzer The coupling loss of the additional cables was recorded and taken in account for all the measurements. After temperature stabilization (approx. 20 min for each stage), the frequency for the lower, the middle and the highest frequency range was recorded. For Frequency stability Vs. Voltage the EUT was connected to a DC power supply and the voltage was adjusted in the required ranges. The result was recorded

8.3 TEST SETUP

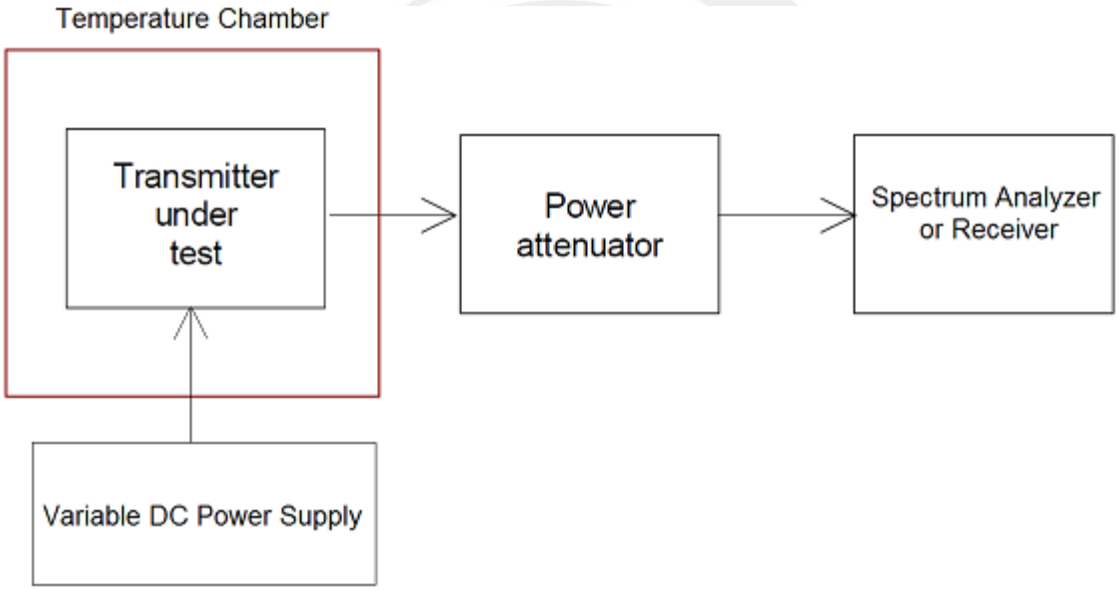

8.4 EUT OPERATION CONDITIONS

TX mode.

8.5 TEST RESULT

FRS				
Test conditions		Frequency error (ppm)	Limit (ppm)	Result
Voltage(V)	Temp(℃)	CH18	±2.5	Pass
6.0	-30	0.53		
	-20	0.76		
	-10	0.63		
	0	0.62		
	10	0.95		
	20	0.87		
	30	0.77		
	40	0.46		
	50	0.6		
5.1	20	0.96		
6.9	20	0.92		

FRS				
Test conditions		Frequency error (ppm)	Limit (ppm)	Result
Voltage(V)	Temp(℃)	CH11	±2.5	Pass
6.0	-30	0.59		
	-20	0.74		
	-10	0.63		
	0	0.59		
	10	0.93		
	20	0.92		
	30	0.83		
	40	0.48		
	50	0.95		
5.1	20	0.81		
6.9	20	0.84		

9. MODULATION LIMIT

9.1 APPLIED PROCEDURES / LIMIT

FRS:
The peak frequency deviation shall not exceed ±2.5 kHz

9.2 TEST PROCEDURE

1. Connect the equipment as illustrated.
2. Adjust the transmitter per the manufacturer's procedure for full rated system deviation
3. Set the test receiver to measure peak positive deviation. Set the audio bandwidth for ⩽0.25 Hz to ⩾15,000 Hz. Turn the de-emphasis function off
4. Apply a 1000 Hz modulating signal to the transmitter from the audio frequency generator, and adjust the level to obtain 60% of full rated system deviation, this level is as a reference (0dB) and vary the input level from –20 to +20dB.
5. Measure both the instantaneous and steady-state deviation at and after the time of increasing the audio input level
6. Repeat step 4-5 with input frequency changing to 300Hz, 1004Hz, 1500Hz and 2500Hz in sequence.

9.3 TEST SETUP

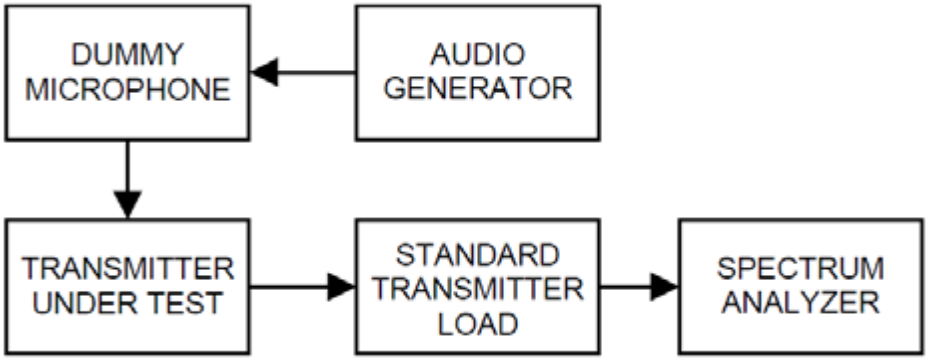

9.4 TEST RESULT

FRS CH18						
Modulation Level (dB)	Peak frequency deviation (kHz)				Limit (kHz)	Result
	300Hz	1004Hz	1500Hz	2500Hz		
-20	0.159	0.201	0.241	0.417	±2.5	Pass
-15	0.088	0.317	0.462	0.956		
-10	0.137	0.551	0.874	1.595		
-5	0.256	0.987	1.649	1.943		
0	0.429	1.386	1.949	2.155		
5	0.381	1.693	2.058	2.228		
10	0.452	1.852	2.203	2.279		
15	0.511	2.027	2.168	2.318		
20	0.744	2.143	2.274	2.352		

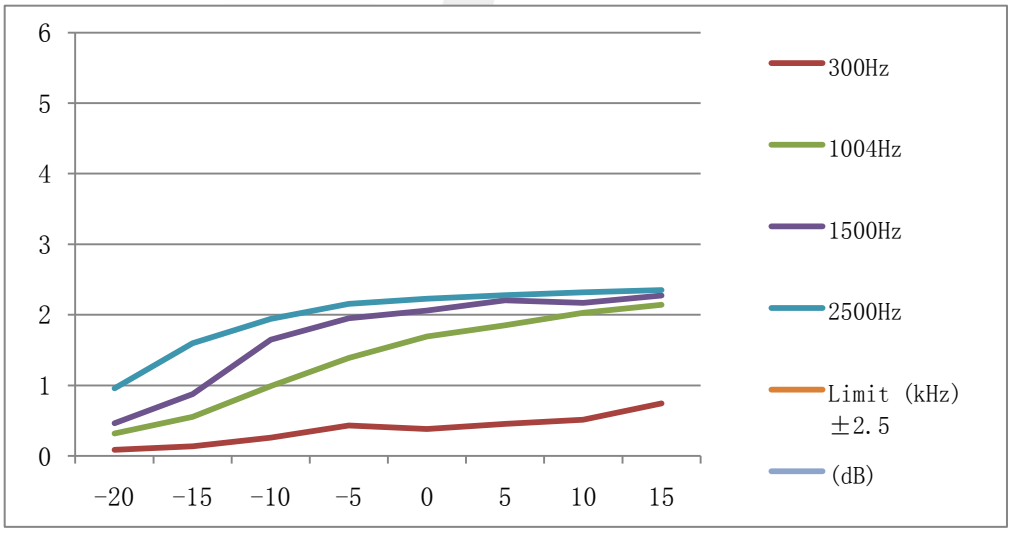

FRS CH11						
Modulation Level (dB)	Peak frequency deviation (kHz)				Limit (kHz)	Result
	300Hz	1004Hz	1500Hz	2500Hz		
-20	0.095	0.251	0.233	0.443	±2.5	Pass
-15	0.061	0.327	0.458	0.818		
-10	0.131	0.612	0.896	1.565		
-5	0.148	1.084	1.599	2.069		
0	0.433	1.432	2.071	2.151		
5	0.462	1.631	2.172	2.183		
10	0.514	1.84	2.189	2.246		
15	0.646	1.877	2.23	2.161		
20	0.772	2.126	2.225	2.229		

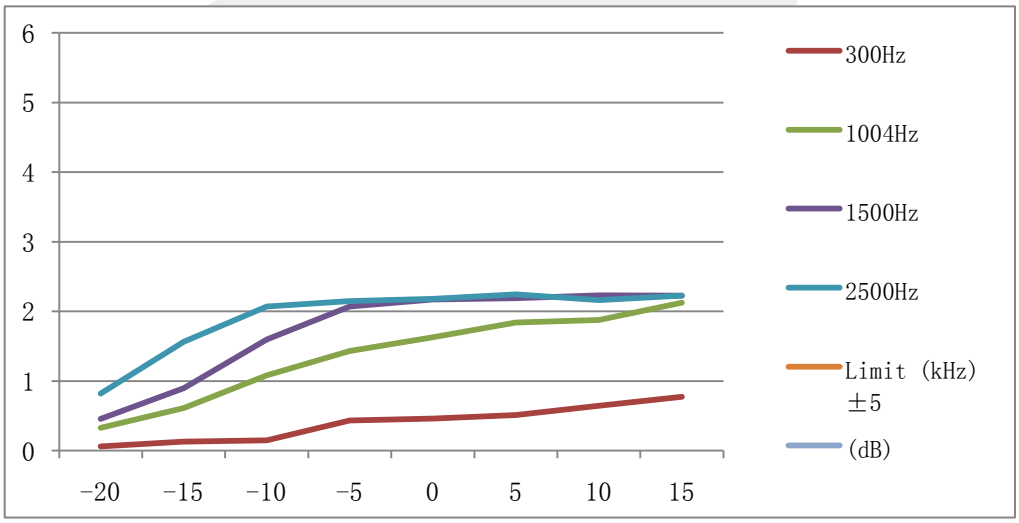

10. AUDIO LOW PASS FILTER RESPONSE

10.1 APPLIED PROCEDURES / LIMIT

The filter must be between the modulation limiter and the modulated stage of the transmitter. At any frequency (f in kHz) between 3 and 20 kHz, the filter must have an attenuation of at least 60 log10 (f/3) dB greater than the attenuation at 1 kHz. Above 20 kHz, it must have an attenuation of at least 50 dB greater than the attenuation at 1 kHz

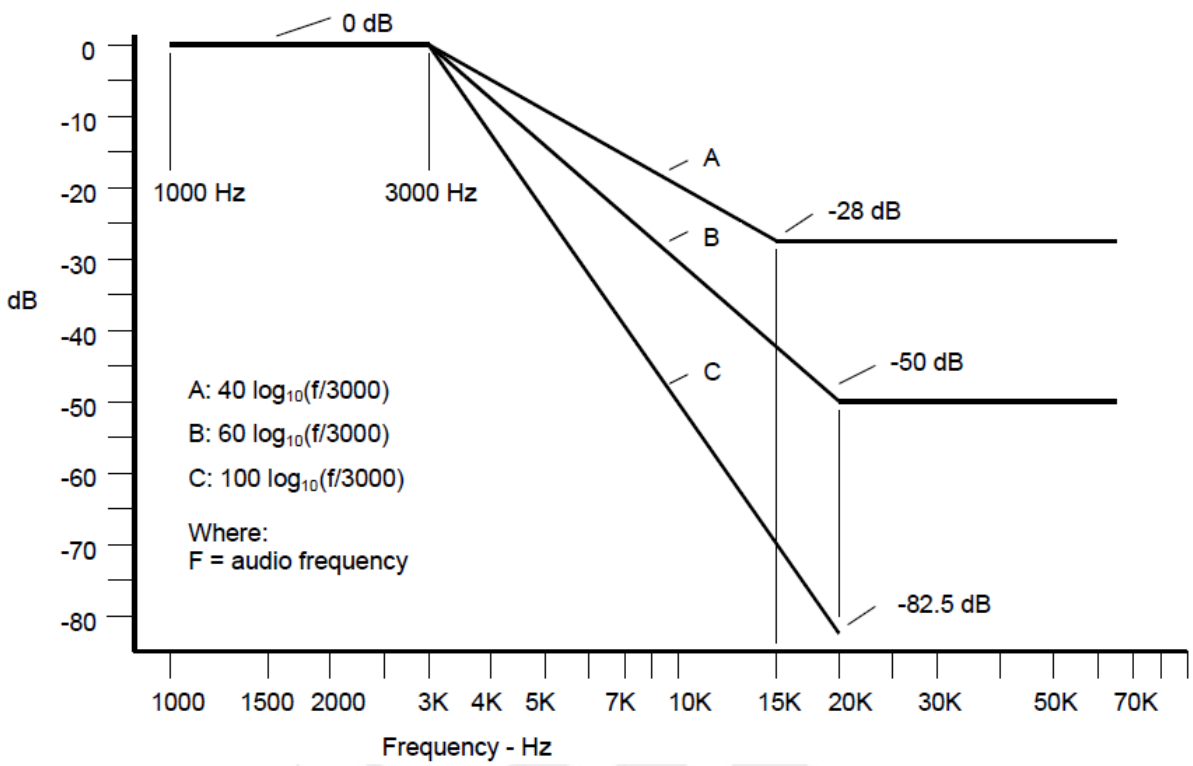

10.2 TEST PROCEDURE

1. Configure the EUT as shown in figure
2. Apply a 1000 Hz tone from the audio signal generator and adjust the level per manufacturer's specifications. Record the dB level of the 1000 Hz tone as LEV_{REF}.
3. Set the audio signal generator to the desired test frequency between 3000 Hz and the upper low pass filter limit. Record the dB level at the test frequency as LEV_{FREQ}
4. Calculate the audio frequency response at the test frequency as:

low pass filter response = LEV_{FREQ} - LEV_{REF}

10.3 TEST SETUP

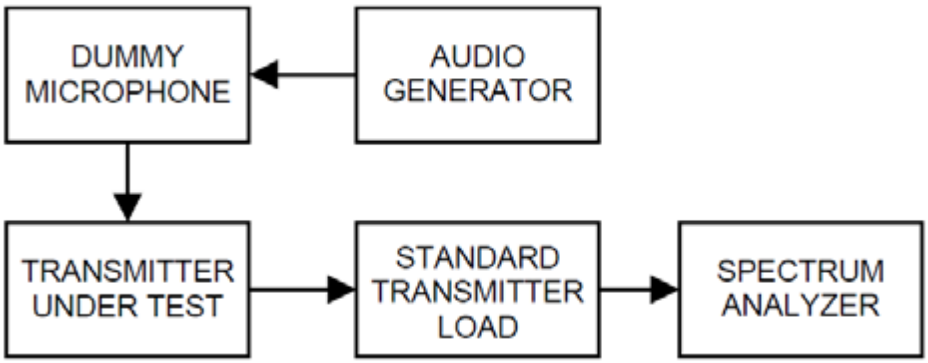

10.4 TEST RESULT

Operation Channel	Audio Frequency (Hz)	Response Attenuation (dB)	Limit	Result
CH18	1000	-2.62	0	Pass
	3000	-3.49	0	
	4000	-6.58	-7.5	
	5000	-11.64	-13.3	
	6000	-17.84	-18.1	
	8000	-22.47	-25.6	
	10000	-29.43	-31.4	
	15000	-39.6	-41.9	
	20000	-55.37	-50	
	30000	-60.52	-50	
	40000	-61.12	-50	
	50000	-61.36	-50	
	60000	-60.98	-50	
	70000	-61.61	-50	
	80000	-61.18	-50	
	90000	-60.2	-50	
	100000	-67.2	-50	

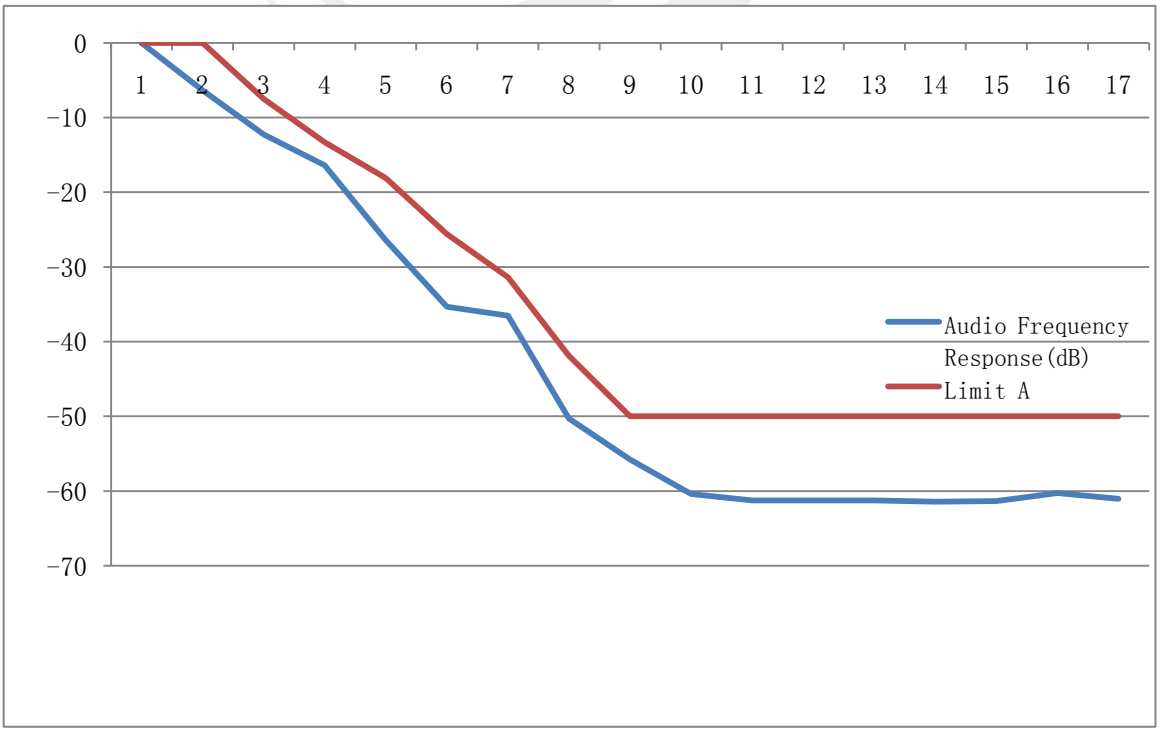

Operation Channel	Audio Frequency (Hz)	Response Attenuation (dB)	Limit	Result
CH11	1000	-3.58	0	Pass
	3000	-3.98	0	
	4000	-4.48	-7.5	
	5000	-12.49	-13.3	
	6000	-17.33	-18.1	
	8000	-24.15	-25.6	
	10000	-30.45	-31.4	
	15000	-40.57	-41.9	
	20000	-55.45	-50	
	30000	-60.3	-50	
	40000	-61.38	-50	
	50000	-61.19	-50	
	60000	-61.37	-50	
	70000	-61.2	-50	
	80000	-61.2	-50	
	90000	-60.29	-50	
	100000	-61.12	-50	

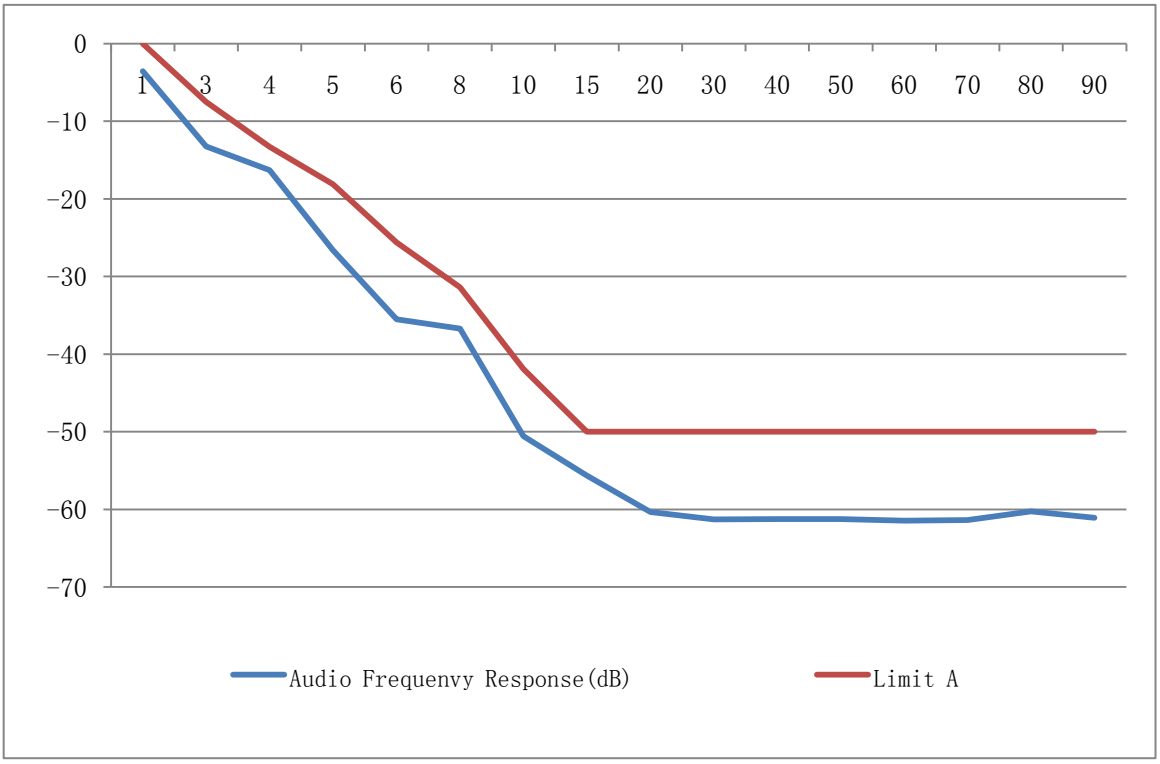

11. AUDIO FREQUENCY RESPONSE

11.1 APPLIED PROCEDURES / LIMIT

FCC Part 95.637(a),FCC Part 2.1047(a):
Voice modulated communication equipment. A curve or equivalent data showing the frequency response of the audio modulating circuit over a range of 100 to 5000 Hz shall be submitted. For equipment required to have an audio low-pass filter, a curve showing the frequency response of the filter or of all circuitry installed between the modulation limiter and the modulated stage shall be submitted.

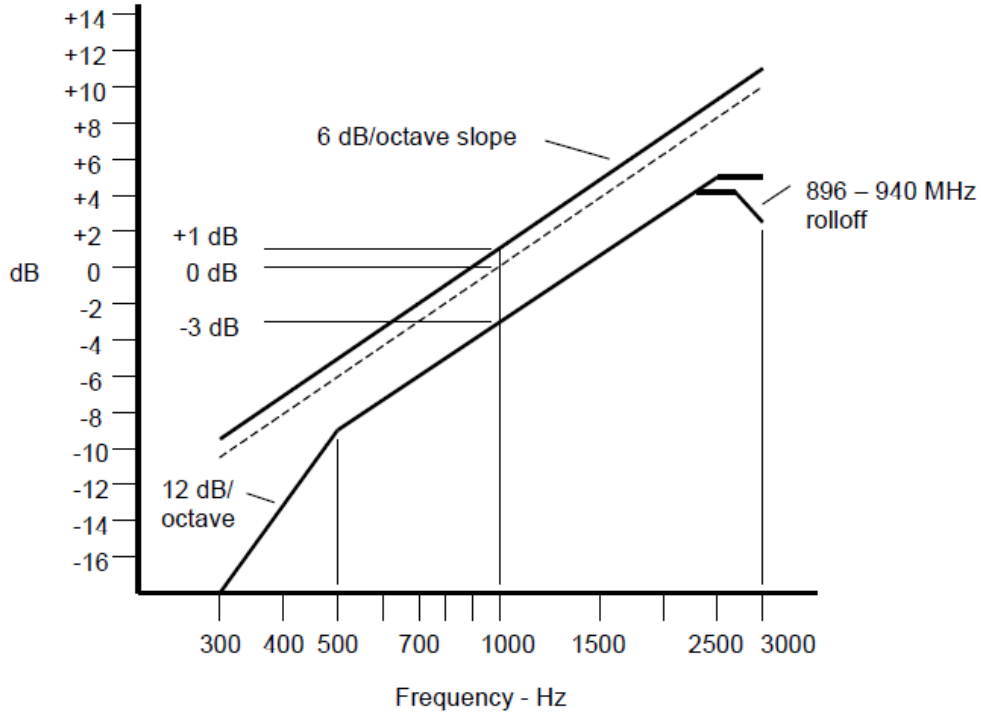

An additional 6 dB per octave attenuation is allowed from 2500 Hz to 3000 Hz in equipment operating in the 25 MHz to 869 MHz range

11.2 TEST PROCEDURE

1. Configure the EUT as shown in figure
2. Adjust the audio input for 20% of rated system deviation at 1kHz using this level as a reference.
3. Vary the Audio frequency from 300Hz to 3 kHz and record the frequency deviation.
4. Audio Frequency Response =20log10 (VFREQ/VREF).

11.3 TEST SETUP

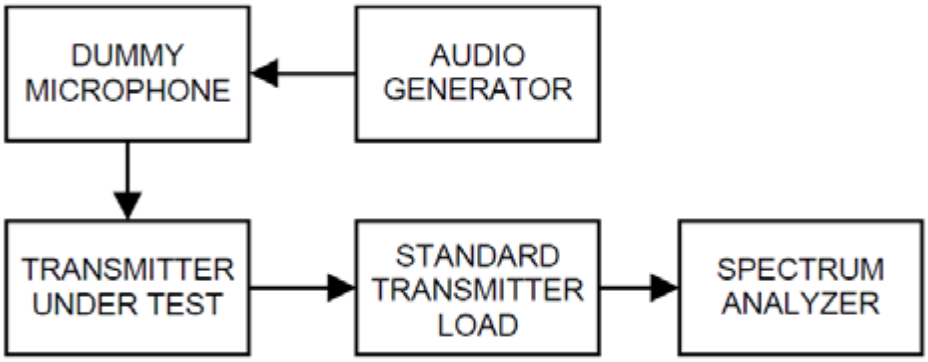

11.4 TEST SETUP

CH18			
Audio Frequency (Hz)	Audio Frequency Response (dB)	Audio Frequency (Hz)	Audio Frequency Response (dB)
100	-20.22	2100	12.47
200	-16.34	2200	13.47
300	-9.36	2300	14.76
400	-7.92	2400	16.18
500	-6.88	2500	17.20
600	-5.56	2600	18.41
700	-4.22	2700	19.67
800	-3.19	2800	21.01
900	-1.76	2900	22.23
1000	-0.74	3000	23.42
1200	1.55	3500	6.89
1400	3.89	4000	-1.71
1600	6.29	4500	-10.35
1800	8.66	5000	-16.56
2000	11.04	--	--

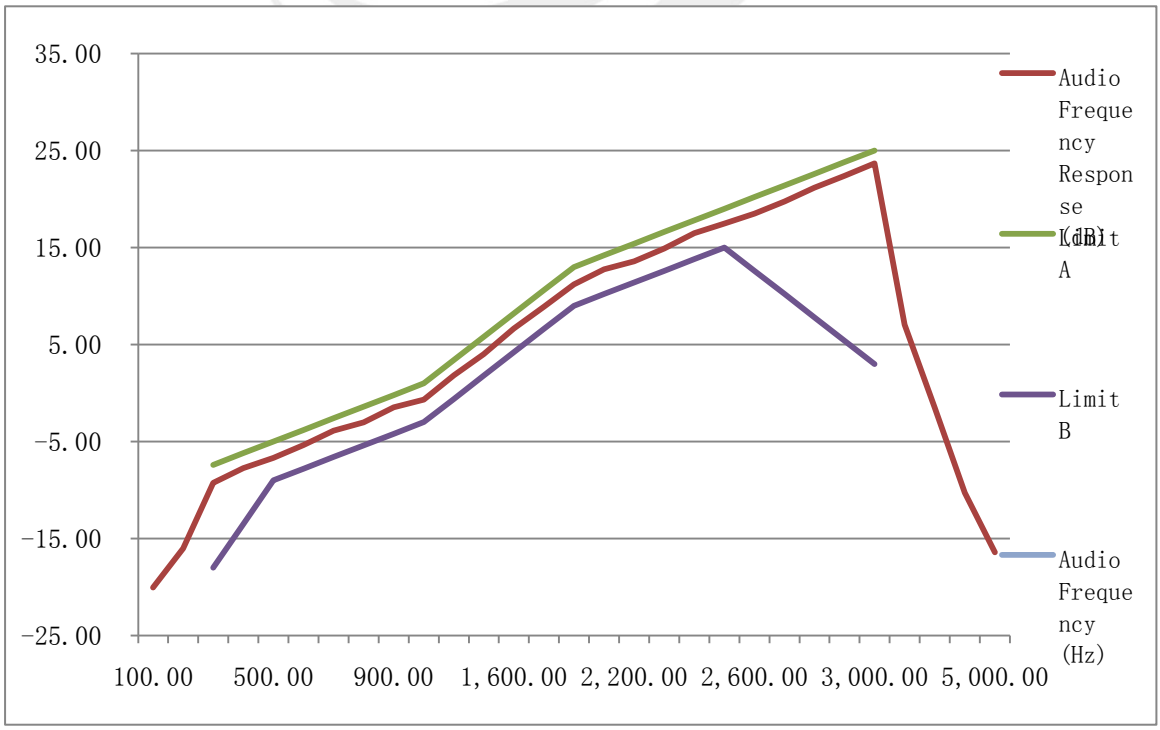

CH11			
Audio Frequency (Hz)	Audio Frequency Response (dB)	Audio Frequency (Hz)	Audio Frequency Response (dB)
100	-20.06	2100	12.75
200	-16.03	2200	13.59
300	-9.26	2300	14.90
400	-7.74	2400	16.49
500	-6.67	2500	17.48
600	-5.35	2600	18.49
700	-3.89	2700	19.76
800	-3.02	2800	21.18
900	-1.48	2900	22.39
1000	-0.68	3000	23.67
1200	1.82	3500	7.04
1400	4.00	4000	-1.49
1600	6.66	4500	-10.29
1800	8.89	5000	-16.43
2000	11.19	--	--

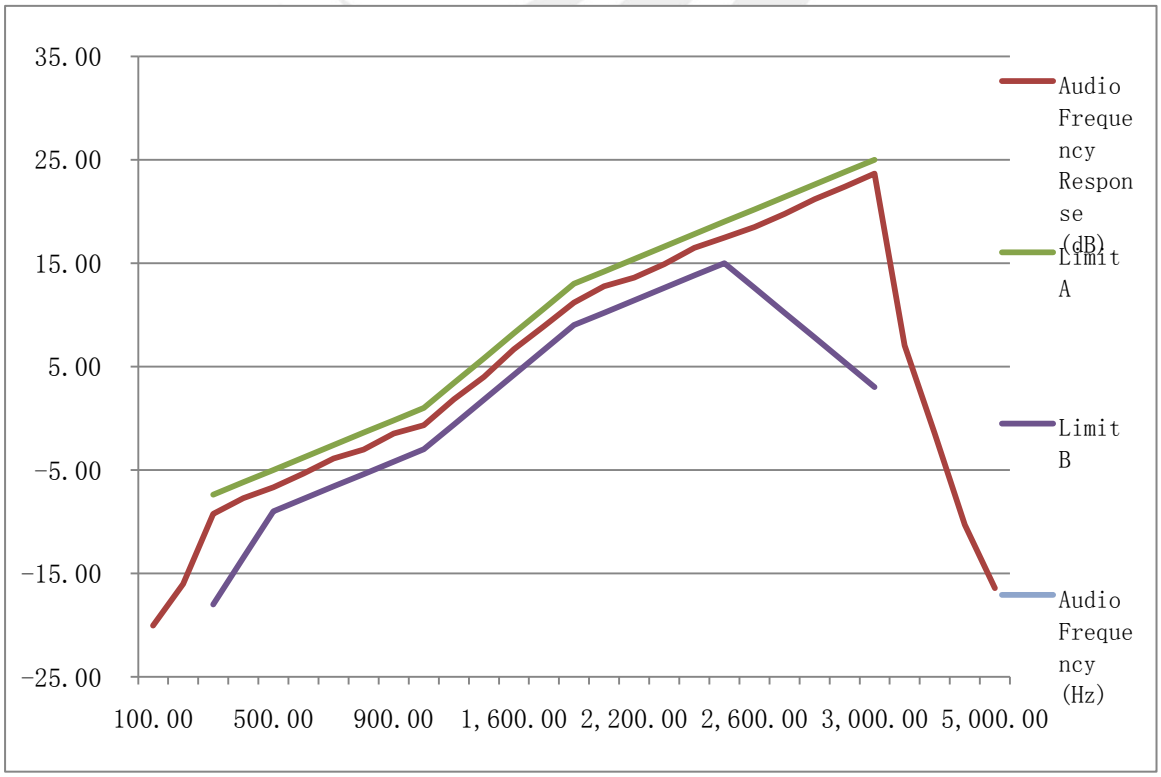

APPENDIX 1- PHOTOS OF TEST SETUP

Radiated Measurement Photos

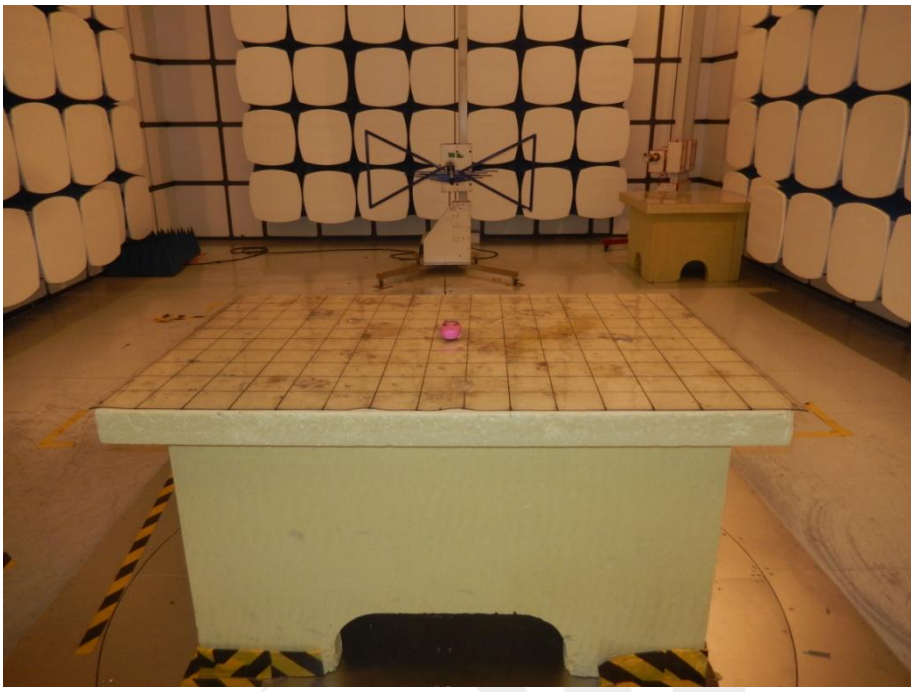

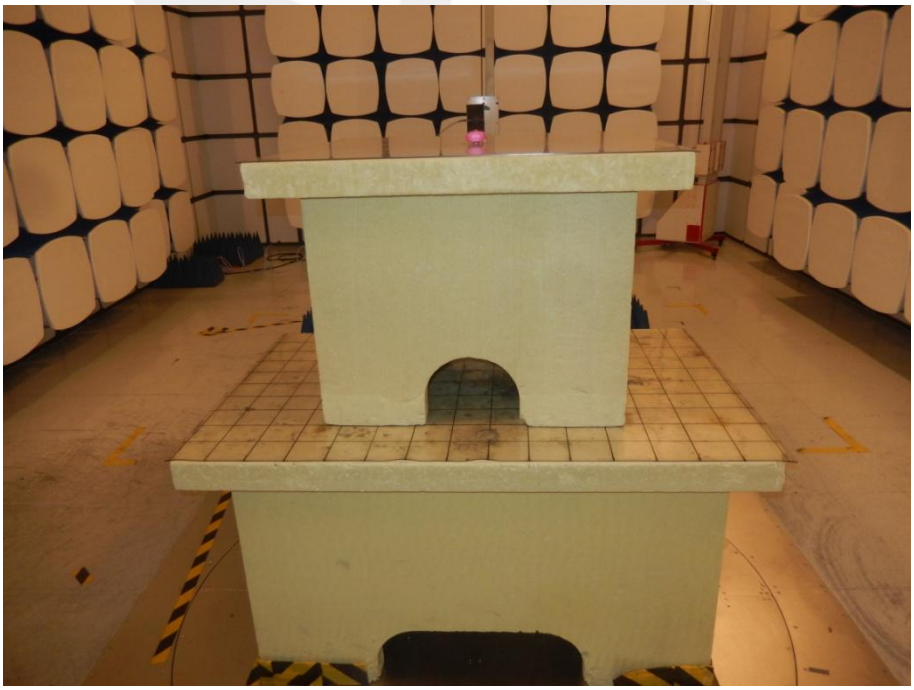

※※※※※END OF THE REPORT※※※※※