Zigbee Module Data Sheet

REX3M

V4.1.0

Copyright

The information contained in this document is the proprietary information of Zhejiang Rexense Technology Co., Ltd. (hereinafter referred as Rexense). All rights reserved. Without the written permission of the company may not to the company's employees, agents, partners or licensing party disclose to any third party other than the content of the document, in any form without authorization, copying or dissemination of this document. If the user violates copyright protection, the company has the right to the resulting legal responsibility shall be investigated for users.

Version update

V1.0.0 Preliminary
V2.0.0 2018/12/3 Hardware updates
V2.1.0 2019/4/2 Adjustment of product picture and size
V4.0.0 2019/5/28 Picture adjusted and package information added

Content

1. Product Introduction - 0 -

1.1 Introduction - 0 -

1.2 Application - 0 -

1.3 Main Characterstics - 1 -

1.4 Product Advantage - 2 -

1.5 Abbreviations - 2 -

1.6 Related Documents - 3 -

2. Product Overview - 3 -

2.1 Overview - 3 -

3.Technical Specifications - 4 -

3.1. Electrical Characteristics - 4 -

3.2. Physical /Ambient Characteristics - 6 -

3.3. Pin configuration - 7 -

3.4 Antenna Specification - 10 -

3.5. Module circuit reference design - 10 -

3.6. Module Debug Interface Description - 11 -

3.7. RF Performance Test Results - 13 -

3.8 Packing Layout Of Module - 15 -

3.9.Soldering Temperature - 16 -

4. Ordering Information - 16 -

5. Contact Us - 17 -

1. Product Introduction

1.1 Introduction

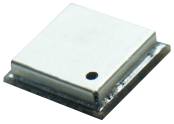

REX3M is a compact, high sensitivity, low power ZigBee module. Based on the innovative hardware platform of RexBee, this module conforms to the IEEE 802.15.4 standard and the ZigBee3.0 protocol standard, and has been widely used in wireless sensing, control and data acquisition. The application of this module saves users much time and energy in the development.

1.2 Application

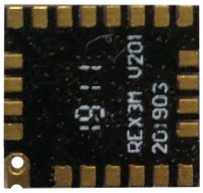

The RexBee module meets the IEEE802.15.4 standards and ZigBee3.0 protocol standards, supports self-healing and self-forming mesh networks, optimizes network traffic and reduces power consumption. This module supports two application configurations:

- Transparent transmission: The user can carry out the program development according to our AT instruction program
- Customization: We can provide reliable and safe application according to the specific application of our customers

Applications for modules include, but are not limited to:

- Building automation and monitoring
  - Lighting control
  - Wireless smoke detector and gas detector
  - Structural integrity monitoring
- HVAC Monitoring and control
- Inventory management
- environmental monitoring
- Security Protection
- Industrial Monitoring
  - Condition and performance monitoring of mechanical equipment

- Monitoring systems for plant (e.g. temperature, pressure, water flow, humidity, etc.)

- Automatic meter reading

1.3 Main Characterstics

- Size：10.5*10*1.8mm
- Output power up to 19.5dBm

EFR32MG1B132F256	max	16.5dBm
EFR32MG1B232F256	max	19.5dBm
EFR32MG13P632F512	max	10dBm
EFR32MG13P732F512	max	19dBm

- High receiver sensitivity：-100dBm
- Excellent link budget：119.5dBm
- Reliable wide range of communication：1000m（Visual distance）
- Very low power consumption
  - Sleep mode：<2.8μA
  - Receive mode：20mA
  - Emission mode：127mA@19.5dBm
- Rich storage resources:
  - EFR32MG1B132F256 256K byte Flash；32K byte RAM
  - EFR32MG1B232F256 256K byte Flash；32K byte RAM
  - EFR32MG13P632F512GM 512K byte Flash； 64K byte RAM
  - EFR32MG13P732F512GM 512K byte Flash； 64K byte RAM
- The 4 GPIO can be configured as multifunctional interfaces according to the user's needs
  - GPIO
  - External interrupt source
  - 12 bit precision ADC sampling channel
  - USART hardware flow control
  - TWI interface
  - SPI/I^2C interface
  - Support MAC address write to Flash
  - Many antennas are available
  - Conforms to the IEEE 802.15.4 specification and ZigBee3.0 standards

- 2.4G unlicensed work frequency band
- Support the AT directive

1.4 Product Advantage

- The package is compact and can be used even with very small equipment.
- Industry leading link budget
- Excellent battery life
- 4 layer PCB board design
- Rich storage resources for customer software applications
- Mesh networking capability
- Easy to use low cost development kit
- ISM unlicensed frequency band

1.5 Abbreviations

ADC	Analog-to -Digital Converter
API	Application Programming Interface
DC	Direct Current
DTR	Data Terminal Ready
DIP	Dual In-line package
EEPROM	Electrically Erasable Programmable Read-Only Memory
ESD	Electrostatic Discharge
GPIO	General Purpose Input/Output
HAL	Hardware Abstraction Layer
HVAC	Heating, Ventilating and Air Conditioning
HW	Hardware
TWI	Inter-Integrated Circuit
IEEE	Institute of Electrical and Electronics Engineers
IRQ	Interrupt Request
ISM	Industrial, Scientific and Medical radio band
JTAG	Digital interface for debugging of embedded device, also known as IEEE 1149.1 standard interface
MAC	Medium Access Control layer
MCU	Microcontroller Unit. In this document it also means the processor, which is the core of ZigBee module
NWK	Network layer
OEM	Original Equipment Manufacturer

OTA	Over-The-Air upgrade
PCB	Printed Circuit Board
PER	Package Error Ratio
PHY	Physical layer
RAM	Random Access Memory
RF	Radio Frequency
RTS/CTS	Request to Send/ Clear to Send
RX	Receiver
SMA	Surface Mount Assembly
SPI	Serial Peripheral Interface
SW	Software
TX	Transmitter
UART	Universal Asynchronous Receiver/Transmitter
USART	Universal Synchronous/Asynchronous Receiver/Transmitter
USB	Universal Serial Bus
ZDK	ZigBee Development Kit
ZigBeePRO	Wireless networking standards targeted at low-power applications
802.15.4	The IEEE 802.15.4-2003 standard applicable to low-rate wireless PAN

1.6 Related Documents

[1] ZigBee 3.0 – The Open, Global Standard for the Internet of Things December 2, 2014

2. Product Overview

2.1 Overview

REX3M is a compact, high sensitivity, low power ZigBee module, which conforms to the IEEE 802.15.4 standard and the ZigBee3.0 protocol standard. Raying based innovative RexBee hardware platform, with excellent RF performance, very low power consumption, very easy to user integration.

Figure 2-1 ***Product diagram***

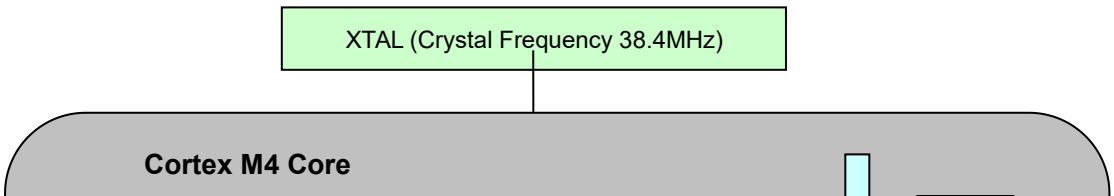

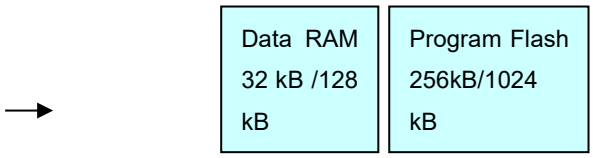

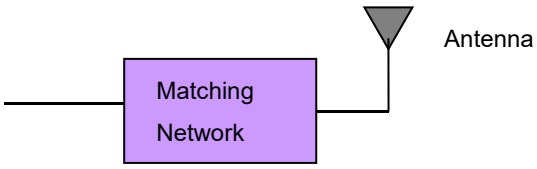

The REX3M module conforms to the FCC, IC, and CE specifications and can be applied to devices in a wide variety of environments, compliant with the RoHS specification. At the same time, the company also provides a complete set of development and evaluation kits, users can choose different versions of their own Suites for testing and development.

3.Technical Specifications

3.1. Electrical Characteristics

3.1.1. Electrical Characteristics

Table 3-1. Absolute maximum rating

Parameter	Minimum	Maximum

Module input voltage (VCC)	1.85V	3.8V
Pin voltage range (ADC except pin)	-0.3V	VDD_PADS+0.3
ADC pin voltage	-0.3V	2.1V
Data of maximum drive current of all I/Os		50 mA
Maximum RF signal receiving density of chips		+10 dBm

Note: exceeding the absolute maximum ratings may damage module. In any case, the user shall not violate the absolute maximum ratings listed in the previous table. If there is a violation, it may cause irreparable damage to the module.

3.1.2. Test condition

Table 3-2. Test conditions (unless otherwise agreed),, VCC = 3.3V, temperature = 25°C

Parameter	Range	Unit
Receiving current	20	mA
Emission current (@19.5dBm)	127	mA
Sleep current	2.8	μA
Transmitted power	-9 to +19.5	dBm
Receiving sensitivity	-100	dBm

3.1.3.RF characteristics

Table 3-3. RF characteristics

Parameter	Test Condition	Range	Unit
Operating frequency band		2400~2483.5	MHz
Bands Number		16	
Channel number		0B~1A	Hex
Channel interval		5	MHz
Transmitted power		-9 to +19.5	dBm
Receiving sensitivity	packet loss rate≤1%	-100	dBm
Maximum transmission rate		250	kbps
Rated input / output impedance	For unbalanced output	50	Ω

3.1.4. Processor characteristics

Table 3-4.Processor characteristics

Parameter	Test Condition	Range	Unit
On-chip Flash storage space		256K/512K	bytes
On-chip RAM storage space		32K/64K	bytes
working frequency		38.4	MHz

3.1.5. Module interface features

Table 3-5.Module interface features

Parameter	Test Condition	Range	Unit
UART Maximum baud rate		230400	bps
Analog channel resolution / conversion time	Half-Duplex Mode	12/4096	Bits/μs
Analog input impedance		>1	MΩ
Analog reference voltage (VREF)		1.2	V
Analog input voltage		0 - VREF	V
I2C bus maximum clock frequency		400	KHz
GPIO output voltage (logic 0)	-8/ 4 mA	0 ~ 0.18*VCC	V
GPIO output voltage (logic 1)	-8/ 4 mA	0.82*VCC ~ VCC	V
Real time clock frequency		32.768	KHz

3.2. Physical /Ambient Characteristics

Table 3-6. Physical / Environmental Characteristics

Parameter	Value	Remarks
Physical dimension	10*10*2.5mm	
Weight	<1g	
Working temperature	-40°C to +85°C	
Working relative humidity	<95%	

3.3. Pin configuration

Chart 3-1. Appearance dimension drawing

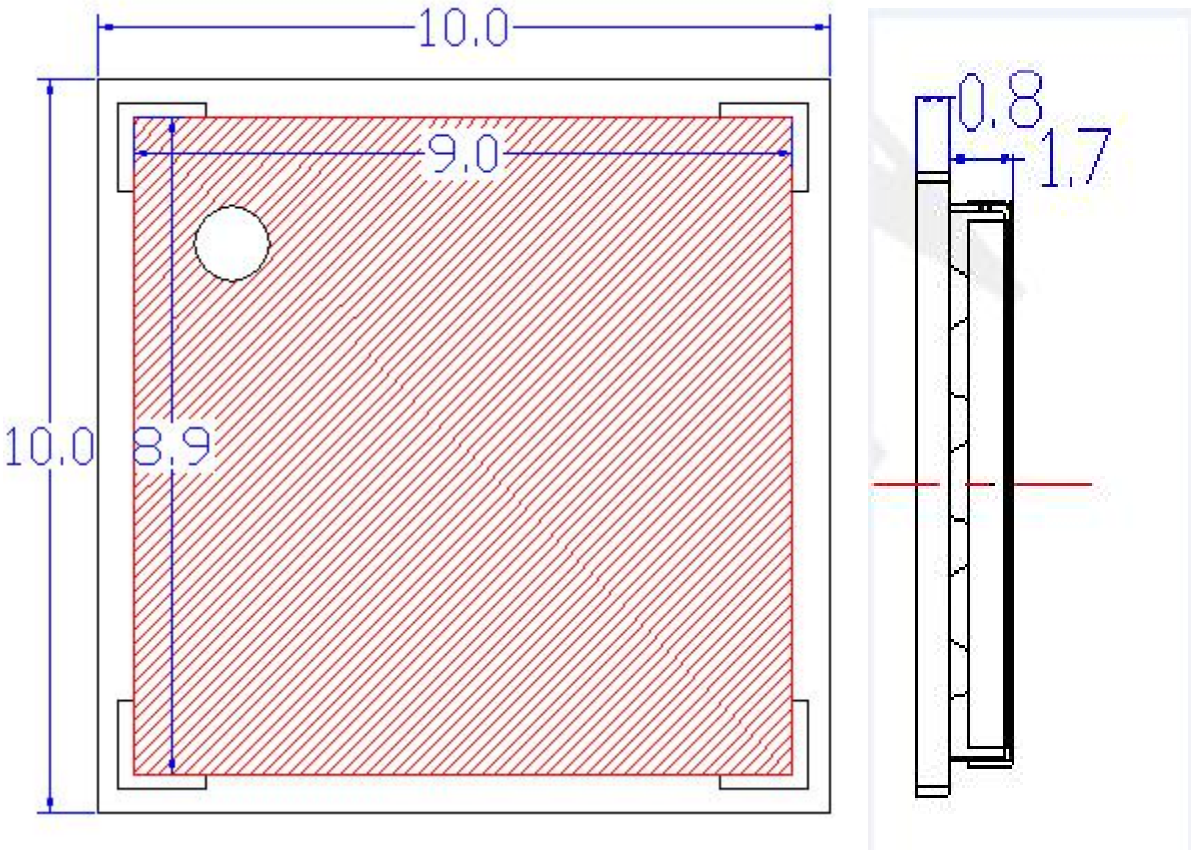

Chart 3-2. Product packaging

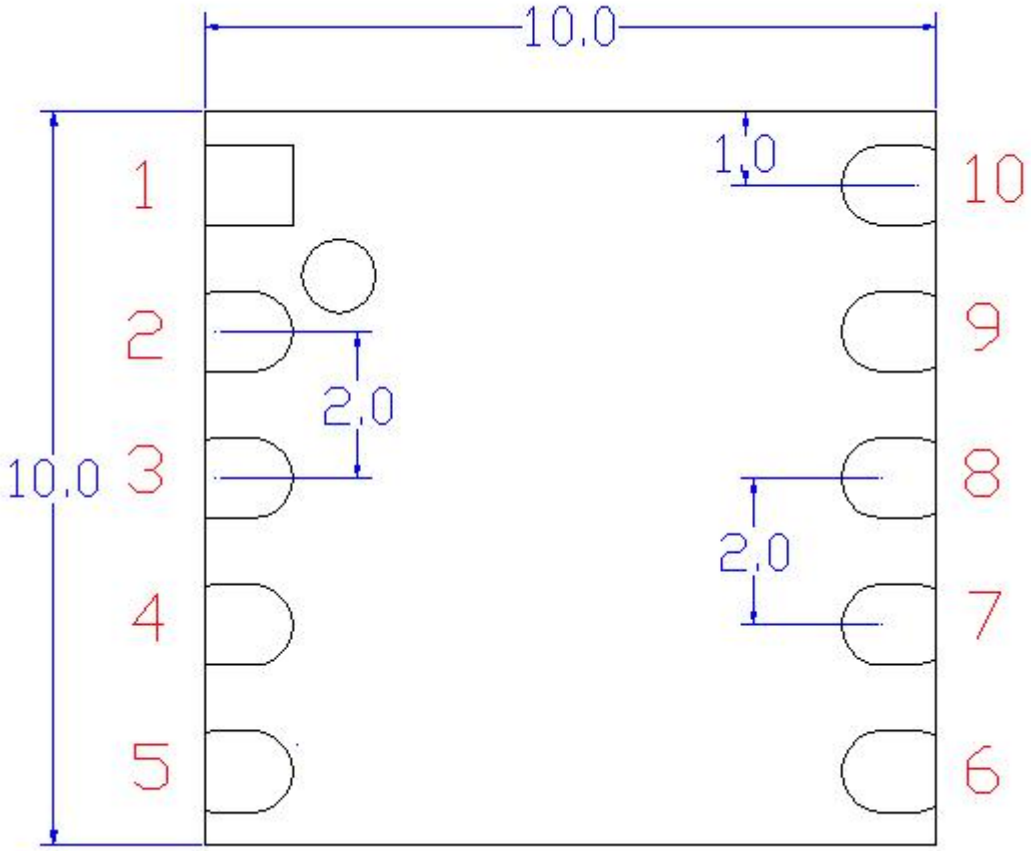

Chart 3-3. Pin configuration

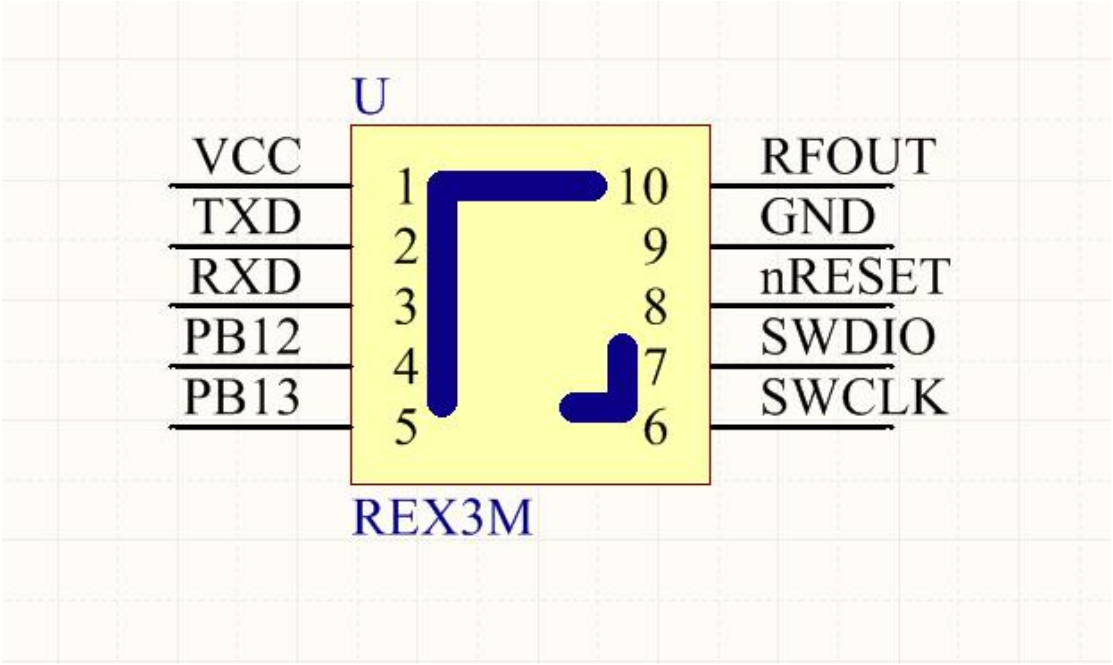

Figure 3-7. Pin description

MODULE Pin Number	QFN32 Package Pin Number	Pin Signal	Direction	Pin Description
1	5,13, 27,30	3.3V	I	DC3.3V supply
2	17	PA0	I/O	Digital I/O;TXD
3	18	PA1	I/O	Digital I/O;RXD
4	20	PB12	I/O	Digital I/O
5	21	PB13	I/O	Digital I/O.
6	1	SWCLK	I	SWD Clock
7	2	SWDIO	I/O	SWD Data
8	8	nRESET	I/O	Active low chip reset (internal pull-up)
9	9,10, 25	GND	I/O	Digital I/O
10	12	RFOUT		RF Output Pin

3.4 Antenna Specification

REX3M customers need to provide the connection of antenna, antenna and RF pin connection module need 50 ohm impedance matching, when the conditions are not allowed to do this when the impedance matching connection should be bold and the module is connected to the user via the nearest ground circuit board ground.

3.5. Module circuit reference design

3.5.1. When the system circuit is 3.3V

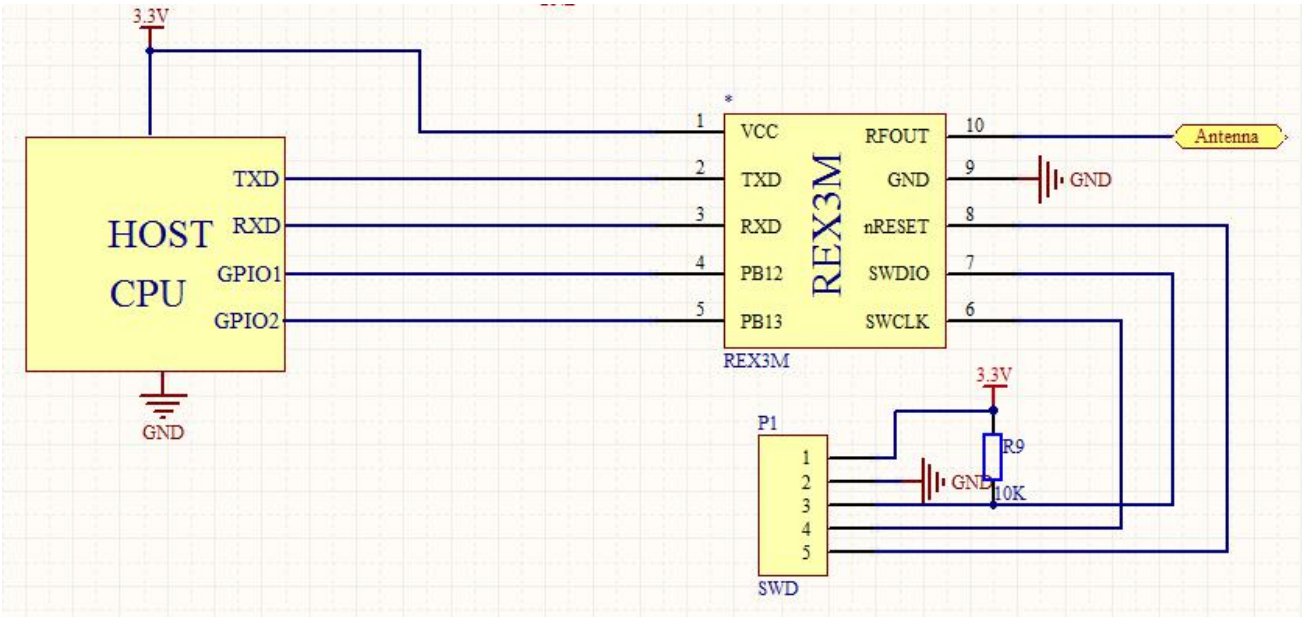

3.5.2. When the system circuit is 5.0V

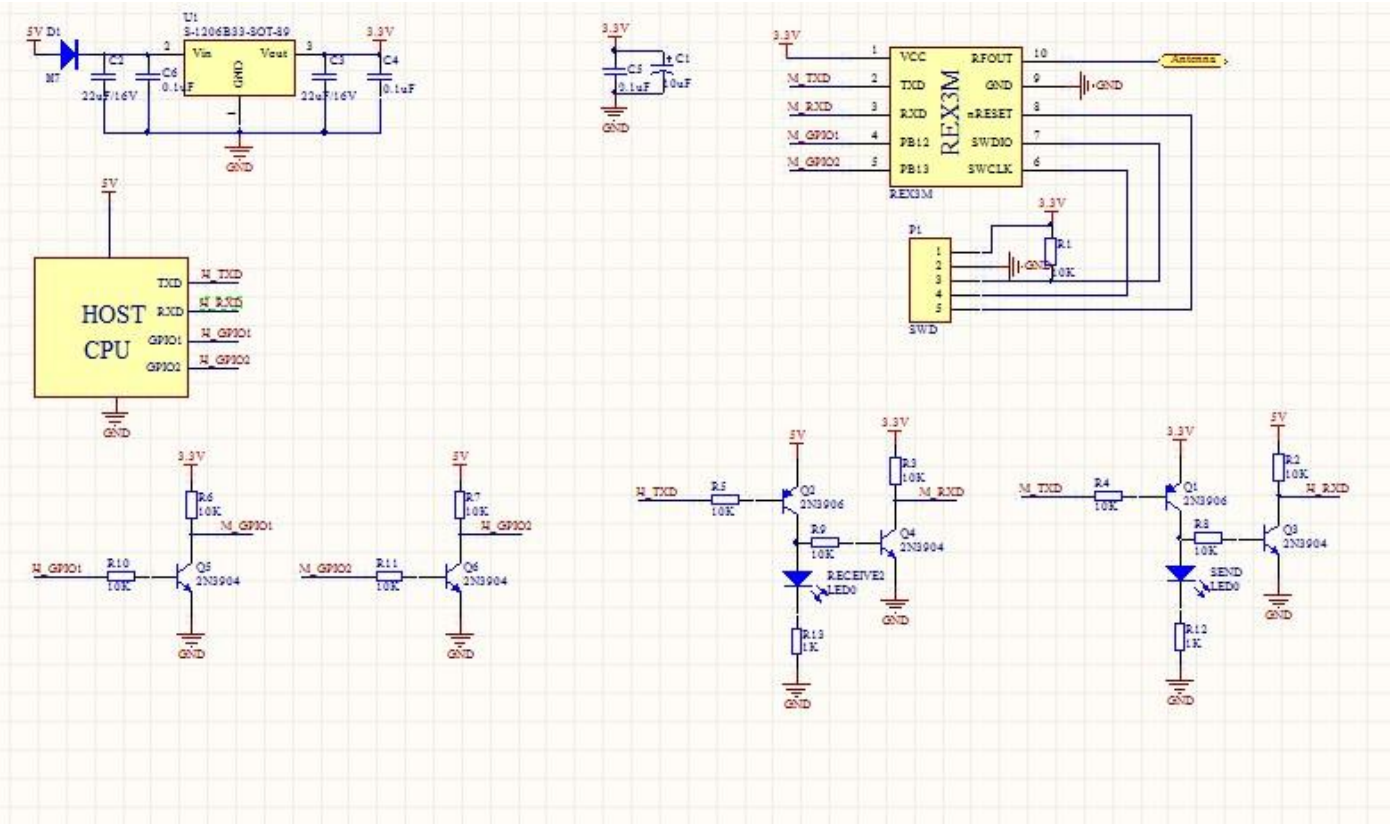

3.6. Module Debug Interface Description

3.6.1. Module debug interface definition

Picture 3-14. Debug programming interface

The debug programming interface, as shown above, does not support standard JTAG connections at this time. We recommend using the SWD connection as shown below.

3.6.2. Module debutting and Programming interface connection

Figure 3-15. SWD connection mode

3-16. The relationship between module debugging, programming interface and JTAG interface is shown below.

Zigbee module pin number	20 pin JTAG interface pin number (name)	SWD Connection mode pin number (name)
1、2(VCC)	1(VCC)	1(VCC)
	2(VCC)	——
	3(nTRST)	——
	4(GND)	——
	5(JTDI)	——

30、31、32（GND）	6(GND)	5(GND)
22（PC4）	7(JTMS)	7(SWDIO)
	8(GND)	——
20（SWCLK）	9(JTCK)	6(SWCLK)
	10(GND)	——
	11(RTCK)	——
	12(GND)	——
	13(JTDO)	——
	14(GND)	——
7（nRESET）	15(RESET)	8(RESET)
	16(GND)	——
	17(DBGRQ)	——
	18(GND)	——
	19(DBGACK)	——
	20(GND)	——
14（PA4）	——	9(PTI_EN)
15（PA5）	——	10(PTI_DATA)

3.7. RF Performance Test Results

Picture 3-17. Receiving sensitivity

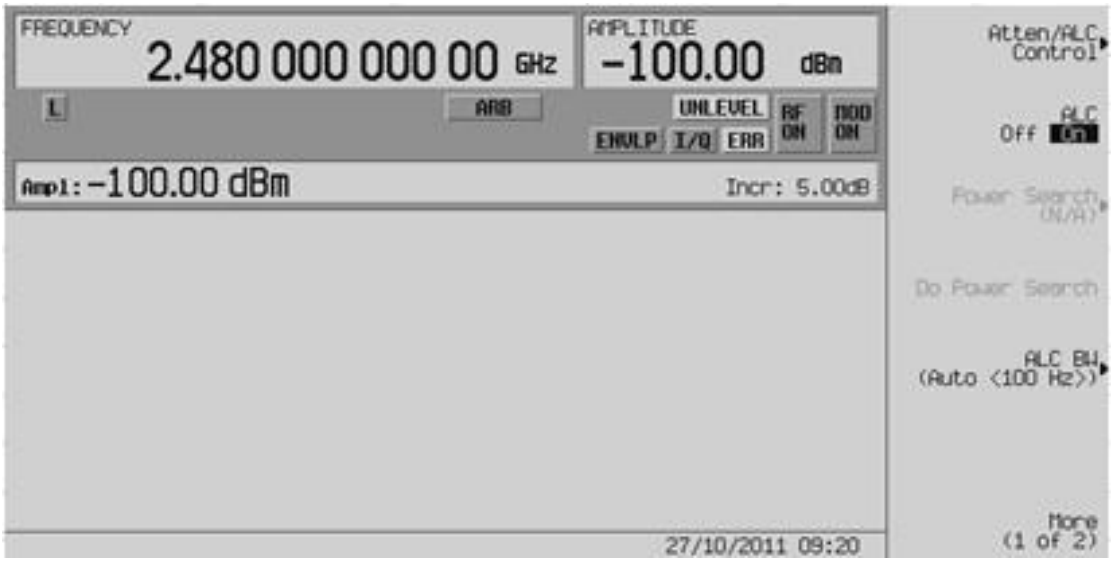

Picture 3-18. Carrier signal test

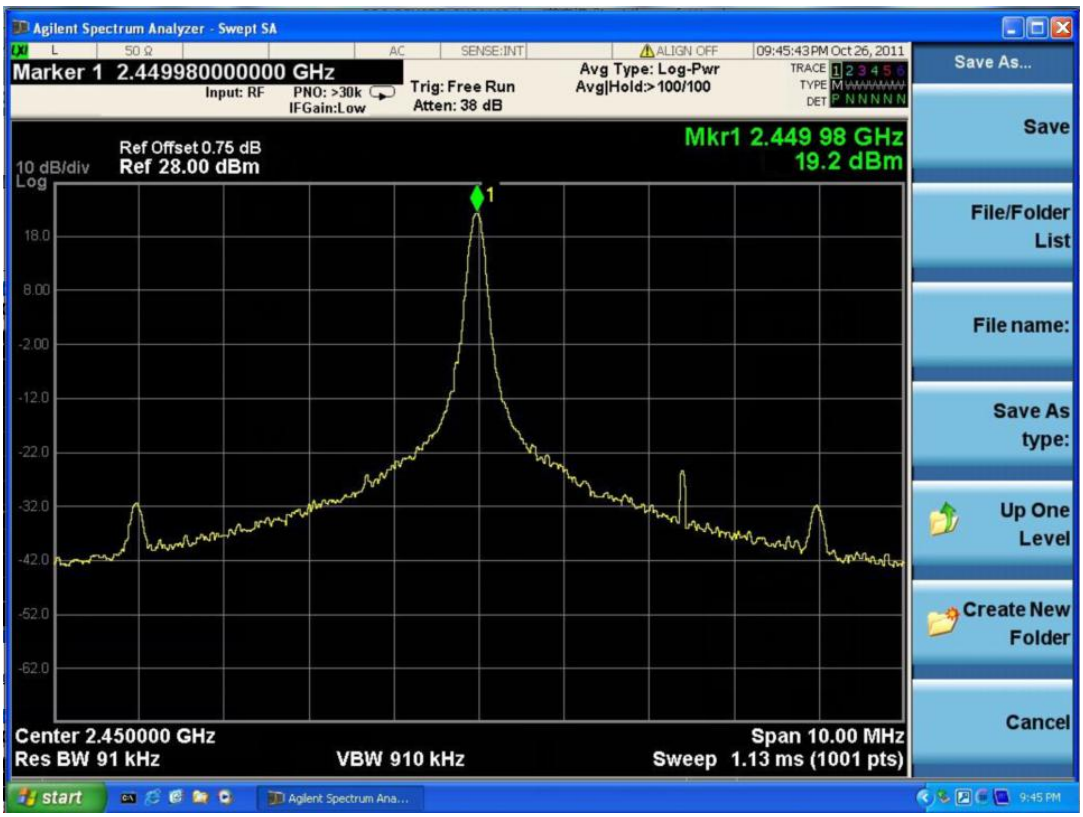

Picure 3-18. Modulation signal test

3.8 Packing Layout Of Module

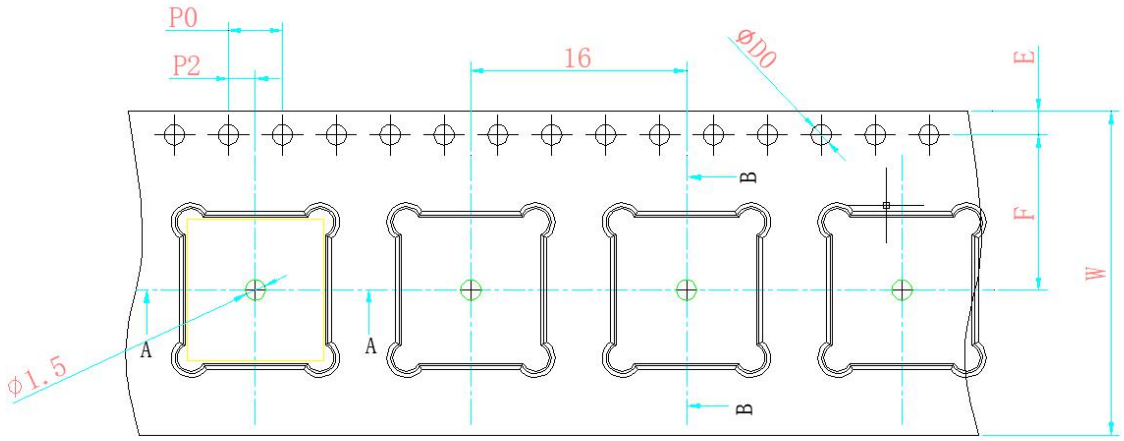

Size Column	
E	1.75±0.10
E2	22.25 MIN
F	11.50±0.10
P2	2.00±0.10
ØDo	$1.50 \pm {}^{0.10}_{0.00}$
ØD1	
Po	4.00±0.10
10Po	40.00±0.20
W	24.00±0.30
P	16.00±0.10
Ao	10.40±0.10
B0	10.85±0.10
K0	2.30±0.10
t	0.30±0.05

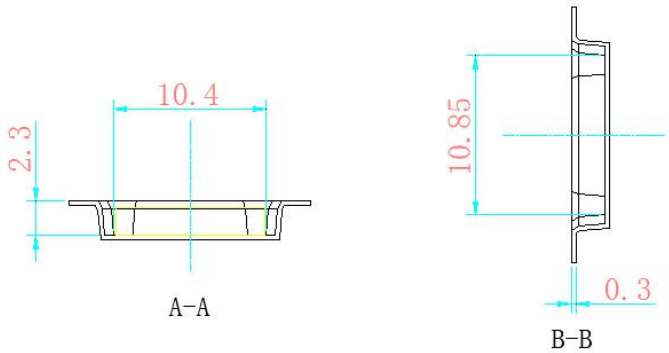

Note

1. Accuracy, of all the 10 side holes, cannot excel± 0.2mm in total.
2. Material specification: PS black antistatic, thickness 0.30mm

3.9.Soldering Temperature

The highest temperature is 237-245℃, duration <20s

4. Ordering Information

REX 3 M 012 P - V4 B0 -

Manufacturer

REX=REXENSE

Series

3=Zigbee

Packaging Type

M= MINI zigbee module

B =Module for Smart Light**(default)**

P =EFR32 Ultra-small Module

Chips

011= EFR32MG1B232F256

012= EFR32MG1B232F256 **(default)**

136= EFR32MG13P632F512

137= EFR32MG13P732F512

Antenna

P=**Pinout (defaul)**

Hardware Version

V4=Version V4

Appearance

B0=Black Ink without Shielding（default）

B=Black Ink

G=Green Ink

1=With Shielding

0=Without Shielding

For Industrial Application

Blank=Normal 85℃（Default）

Ⅰ=Industrial Application(Version for Hi-temp）

5. Contact Us

Zhejiang Raying IoT Technology Co., Ltd.

Add：10F,North of Building No.10,Wellong,Hangzhou,310051 China

Tel：0571-85395623

Fax：0571-87987620

Email: intl@rexense.com

Web：www.rexense.com

Antenna
Manufacturer: Shenzhen boantong technology co. LTD
深圳市博安通科技股份有限公司
Model: An2400p
Gain: 1.5dbi

FCC Statement
FCC standards: FCC CFR Title 47 Part 15 Subpart C Section 15.247
External antenna with antenna gain 1.5dBi

This device complies with part 15 of the FCC Rules. Operation is subject to the following two conditions: (1) This device may not cause harmful interference, and (2) this device must accept any interference received, including interference that may cause undesired operation.
Any Changes or modifications not expressly approved by the party responsible for compliance could void the user's authority to operate the equipment.
Note: This equipment has been tested and found to comply with the limits for a Class B digital device, pursuant to part 15 of the FCC Rules. These limits are designed to provide reasonable protection against harmful interference in a residential installation. This equipment generates, uses and can radiate radio frequency energy and, if not installed and used in accordance with the instructions, may cause harmful interference to radio communications. However, there is no guarantee that interference will not occur in a particular installation. If this equipment does cause harmful interference to radio or television reception, which can be determined by turning the equipment off and on, the user is encouraged to try to correct the interference by one or more of the following measures:
—Reorient or relocate the receiving antenna.
—Increase the separation between the equipment and receiver.
—Connect the equipment into an outlet on a circuit different from that to which the receiver is connected.
—Consult the dealer or an experienced radio/TV technician for help.

We will retain control over the final installation of the modular such that compliance of the end product is assured. In such cases, an operating condition on the limit modular approval for the module must be only approved for use when installed in devices produced by a specific manufacturer. If any hardware modify or RF control software modify will be made by host manufacturer,C2PC or new certificate should be apply to get approval,if those change and modification made by host manufacturer not expressly approved by the party responsible for compliance ,then it is illegal.

FCC Radiation Exposure Statement

This modular complies with FCC RF radiation exposure limits set forth for an uncontrolled environment. This transmitter must not be co-located or operating in conjunction with any other antenna or transmitter.

If the FCC identification number is not visible when the module is installed inside another device, then the outside of the device into which the module is installed must also display a label referring to the enclosed module. This exterior label can use wording such as the following: “Contains Transmitter Module FCC ID: 2AOE2-REX3M Or Contains FCC ID: 2AOE2-REX3M”
When the module is installed inside another device, the user manual of the host must contain below warning statements;
1. This device complies with Part 15 of the FCC Rules. Operation is subject to the following two conditions:
(1) This device may not cause harmful interference.
(2) This device must accept any interference received, including interference that may cause undesired operation.
Note: This equipment has been tested and found to comply with the limits for a Class B digital device, pursuant to part 15 of the FCC Rules. These limits are designed to provide reasonable protection against harmful interference in a residential installation. This equipment generates, uses and can radiate radio frequency energy and, if not installed and used in accordance with the instructions, may cause harmful interference to radio communications.
However, there is no guarantee that interference will not occur in a particular installation. If this equipment does cause harmful interference to radio or television reception, which can be determined by turning the equipment off and on, the user is encouraged to try to correct the interference by one or more of the following measures:
—Reorient or relocate the receiving antenna.
—Increase the separation between the equipment and receiver.
—Connect the equipment into an outlet on a circuit different from that to which the receiver is connected.
—Consult the dealer or an experienced radio/TV technician for help.

2. Changes or modifications not expressly approved by the party responsible for compliance could void the user's authority to operate the equipment.
The devices must be installed and used in strict accordance with the manufacturer's instructions as described in the user documentation that comes with the product.
Any company of the host device which install this modular with limit modular approval should perform the test of radiated & conducted emission and spurious emission,etc. according to FCC part 15C : 15.247 and 15.209 & 15.207 ,15B Class B requirement, Only if the test result comply with FCC part 15C : 15.247 and 15.209 & 15.207 ,15B Class B requirement， then the host can be sold legally.