Zigbee Module Data Sheet

REX3P

V3.0.0

Copyright

The information contained in this document is the proprietary information of Zhejiang Rexense Technology Co., Ltd. (hereinafter referred to as Rexense or the company). All rights reserved. Without the written permission of the company, the content of the document shall not be disclosed to the company's employees, agents, partners or any unauthorized parties in any form without authorization, copying or dissemination of this document is prohibited. Our company shall reserve rights to the legal responsibility again any user’s violation of copyright protection.

Document Change List

V1.0.0 Initial version
V3.0.0 2019/1/30 Hardware Version Added

Content

1. Production Introduction.....- 3 -

1.1 Introduction.....- 3 -

1.2 Application.....- 3 -

1.3 Main Characteristics.....- 4 -

1.4 Product Advantage..... - 4 -

1.5 Abbreviations..... - 5 -

1.6 Related documents..... - 6 -

2. Product Overview..... - 6 -

2.1 Overview..... - 6 -

3. Technical Specification..... - 7 -

3.1. Electrical Specification..... - 7 -

3.2. Physical/Ambient Characteristics..... - 9 -

3.3. Pin Configuration..... - 9 -

3.4. Test Result of RF Performance..... - 16 -

3.5. Packing Layout Of Module..... - 18 -

4. Ordering Information..... - 19 -

5. Contact Us..... - 19 -

1. Production Introduction

1.1 Introduction

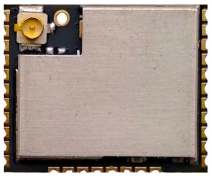

REX3P is a low-power ZigBee module with high sensitivity and compact in dimension. Basec on Rexense innovative RexBee hardware platform, this module conforms to IEEE 802.15.4 specification

and ZigBee3.0 protocol standard. It has been widely used in fields of wireless sensing, control and data collection. The application of this module saves users much time and energy in the development.

1.2 Application

REX3B module conforms to IEEE 802.15.4 specification and ZigBee3.0, supports the mesh network which is self-healing and self-assembling, optimizes the network rate and power consumption. This module supports the setting and configuration as below:

- Standard ZigBee 3.0
- Transparent transmitting: users can develop according to our AT command
- Customization: we can provide customers with reliable and safe application software according to their specific application.

Application of module, included but not limited to:

- Smart home
  - Light control
  - Security system
  - Air quality monitoring
  - Smart lock
  - Motorized curtain
  - Air-conditioning, heating and ventilation
  - Scenario automation
- Building automation and monitoring
- HVAC monitoring and control
- Warehouse management
- Smart agriculture
- Industrial monitoring
- Smart transportation
- Wireless meter reading

1.3 Main Characteristics

- Dimension：18*15*2.6mm
- Output power：

EFR32MG1B132F256	max	16.5dBm
EFR32MG1B232F256	max	19.5dBm
EFR32MG13P632F512	max	10dBm
EFR32MG13P732F512	max	19dBm

- Max receiving sensitivity：-101dBm
- Max link budget：120dBm
- Reliable communication distance：1000m（view distance）
- Extreme low power consumption
  - Sleep mode：<2.8μA
  - Receiving mode：12mA
  - Transmitting mode：127mA@19.5dBm
- Big storage resource:
  - EFR32MG1B132F256 256K Flash；32K RAM
  - EFR32MG1B232F256 256K Flash；32K RAM
  - EFR32MG13P632F512GM 512K Flash； 64K RAM
  - EFR32MG13P732F512GM 512K Flash； 64K RAM
- 25 GPIOs can be configured for various functional interfaces according to application
  - GPIO
  - External interrupts
  - 12 bytes precision ADC sampling channel
  - USART UART hardware flow control
  - TWI interface
  - SPI/I^2C interface
  - PWM output
  - hardware watchdog

1.4 Product Advantage

- Small package, suitable to small PCB
- Advanced link budget in the industry
- Outstanding battery life
- PCB design of 4-layers
- Rich storage resource, good for client software application
- Powerful mesh network forming ability
- 易 With development kit, easy to use and cost-effective
- ISM band license free

1.5 Abbreviation

ADC	Analog-to -Digital Converter
API	Application Programming Interface

DC	Direct Current
DTR	Data Terminal Ready
DIP	Dual In-line package
EEPROM	Electrically Erasable Programmable Read-Only Memory
ESD	Electrostatic Discharge
GPIO	General Purpose Input/Output
HAL	Hardware Abstraction Layer
HVAC	Heating, Ventilating and Air Conditioning
HW	Hardware
TWI	Inter-Integrated Circuit
IEEE	Institute of Electrical and Electronics Engineers
IRQ	Interrupt Request
ISM	Industrial, Scientific and Medical radio band
JTAG	Digital interface for debugging of embedded device, also known as IEEE 1149.1 standard interface
MAC	Medium Access Control layer
MCU	Microcontroller Unit. In this document it also means the processor, which is the core of ZigBee module
NWK	Network layer
OEM	Original Equipment Manufacturer
OTA	Over-The-Air upgrade
PCB	Printed Circuit Board
PER	Package Error Ratio
PHY	Physical layer
RAM	Random Access Memory
RF	Radio Frequency
RTS/CTS	Request to Send/ Clear to Send
RX	Receiver
SMA	Surface Mount Assembly
SPI	Serial Peripheral Interface
SW	Software
TX	Transmitter
UART	Universal Asynchronous Receiver/Transmitter
USART	Universal Synchronous/Asynchronous Receiver/Transmitter
USB	Universal Serial Bus
ZDK	ZigBee Development Kit
ZigBeePRO	Wireless networking standards targeted at low-power applications
802.15.4	The IEEE 802.15.4-2003 standard applicable to low-rate wireless PAN

1.6 Related documents

[1] ZigBee 3.0 – The Open, Global Standard for the Internet of Things December 2, 2014

2. Product Overview

2.1 Overview

REX3P is a ZigBee module of compact layout, higher sensitivity and lower power, and conforms to IEEE 802.15.4 and ZigBee 3.0 standard protocol. Based on Rexense's innovative RexBee hardware platform, this module has outstanding RF characteristics, lower power consumption, powerful.

Table 2-1 Product diagram

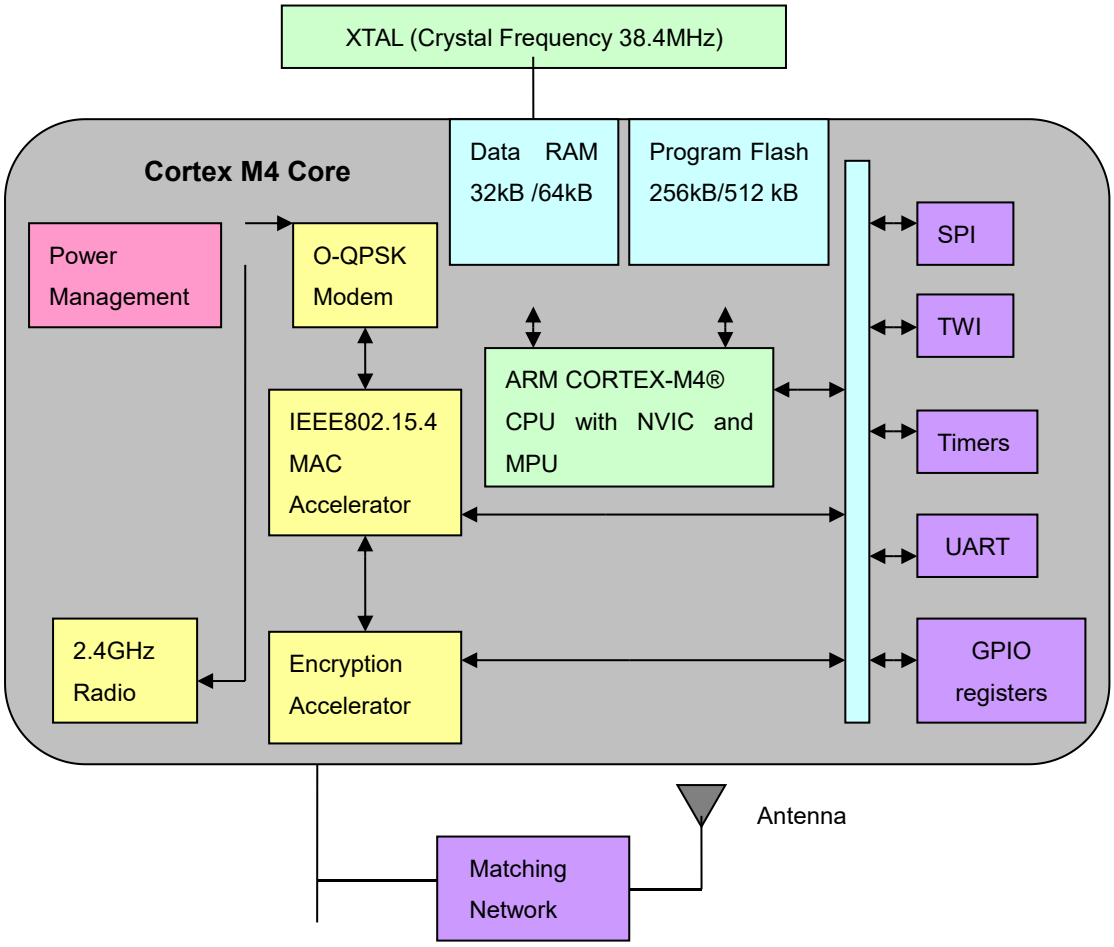

REX3P module conforms to the FCC, IC, CE, and RoHS, which can be applied to various devices in

different environments.

At the same time, our company also provides a complete set of development and evaluation kits, users can choose kits of different versions for testing and development according to their requirements.

3. Technical Specification

3.1. Electrical Specification

3.1.1. Electrical Specification

Table 3-1. Absolute Maximum Ratings

Parameter	Min	最Max
(VCC) Module input voltage (VCC)	1.85V	3.8V
Pin voltage (except ADC pin)	-0.3V	VDD_PADS+0.3
ADC Pin voltage	-0.3V	2.1V
Data of maximum drive current of all I/Os		50 mA
Maximum RF signal receiving density of chips		+10 dBm

Note: exceeding the absolute maximum ratings may damage module. In any case, the user shall not violate the absolute maximum ratings listed in the previous table. If there is a violation, it may cause irreparable damage to the module.

3.1.2. Test Conditions

Table 3-2. Test conditions(unless otherwise agreed), VCC = 3.3V, temperature = 25°C

Parameter	Range	Unit
Receiving current	12	mA
(@19dBm) Transmitting current	127	mA
Sleeping current	2.8	μA
Transmitting power	-9 to +19.5	dBm
Receiving sensitivity	-101	dBm

3.1.3. RF Electrical Characteristics

Table 3-3. RF Electrical Characteristics

Parameter	Test condition	Range	Unit
Frequency range		2400~2483.5	MHz
Channels		16	
Signal No.		0B~1A	Hex
Channel spacing		5	MHz
Transmitting power		-9 to +19	dBm
Receiving sensitivity	Packet loss≤1%	-100	dBm
Max transmitting rate		250	kbps
Rated Input / Output Impedance	For unbalanced output	50	Ω

3.1.4. Processor Characteristics

Table 3-4. Processor Characteristics

Parameter	Test Conditions	Range	Unit
On-chip flash storage		256K/512K	bytes
On-chip RAM storage		32K/64K	bytes
Working frequency		38.4	MHz

3.1.5. Module Interface Characteristics

Table 3-5. Module Interface Characteristics

Parameter	Test Conditions	Range	Unit
UART Max baud rate		230400	bps
The resolution / conversion time of the analog channel	Half-duplex mode	12/4096	Bits/μs
Analog input impedance		>1	MΩ
Analog reference voltage (VREF)		3.3	V
Analog input voltage		0 - VREF	V
I2C bus maximum clock frequency		400	KHz
GPIO output voltage (logic 0)	-8/ 4 mA	0 ~ 0.18*VCC	V
GPIO output voltage (logic 1)	-8/ 4 mA	0.82*VCC ~	V

		VCC	
Real-time clock frequency		32.768	KHz

3.2. Physical/Ambient Characteristics

Table 3-6. Physical/Ambient Characteristics

Parameter	Value	Note
Physical size	18.0*15.0*2.6mm	
Weight	<1g	
***Working temperature**	-40°C to +85°C	
Relative working Humidity	<95%	

3.3. Pin Configuration

Figure3-1. Layout Dimension

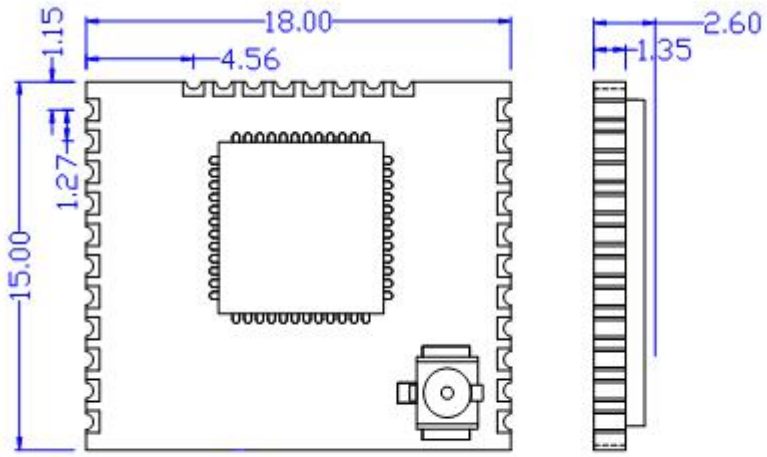

Figure3-2. Product Packages

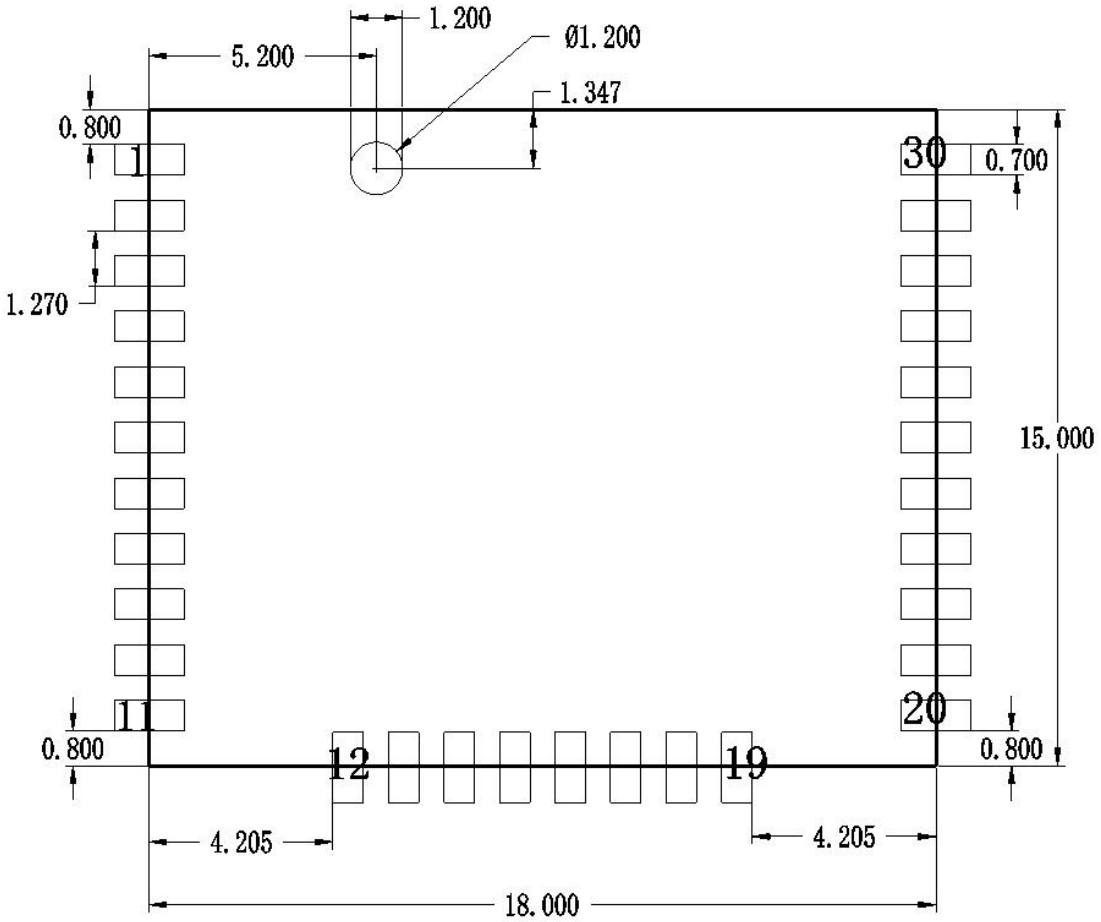

Table 3-9. Pin Configuration

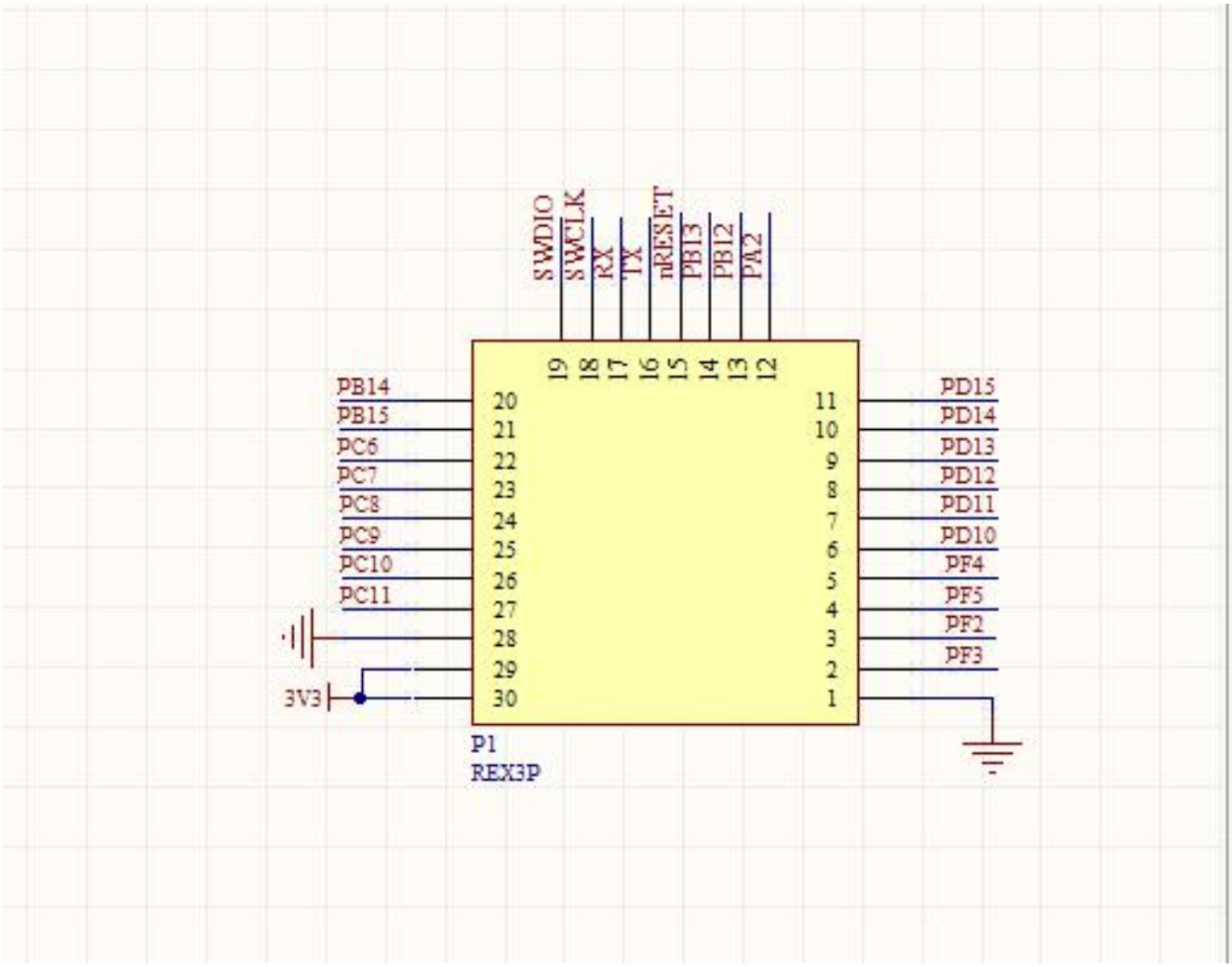

Table 3-10. Pin Description

No. of module pins	No. of QFN48 package pins	Pin signal	Direction	Pin specification
1	14，15，37	GND	-	Ground
2	4	PF3	I/O	Digital I/O;
3	3	PF2	I/O	Digital I/O;
4	6	PF5	I/O	Digital I/O
5	5	PF4	I/O	Digital I/O.

No. of module pins	No. of QFN48 package pins	Pin signal	Direction	Pin specification
6	19	PD10	I/O	Digital I/O
7	20	PD11	I/O	Digital I/O
8	21	PD12	I/O	Digital I/O
9	22	PD13	I/O	Digital I/O; PTA_PRIORITY
10	23	PD14	I/O	Digital I/O; PTA_GRANT
11	24	PD15	I/O	Digital I/O ; PTA_REQUEST
12	27	PA2	I/O	Digital I/O
13	32	PB12	I/O	Digital I/O ;PTI_DATA
14	33	PB13	I/O	Digital I/O ;PTI_FRAME
15	12	nRESET	I	Active low chip reset (internal pull-up)
16	25	PA0	I/O	Digital I/O ;TXD
17	26	PA1	I/O	Digital I/O ;RXD
18	1	SWCLK	I/O	SWD Clock
19	2	SWDIO	I/O	SWD Data
20	35	PB14	I/O	Digital I/O ; VCOM_TX
21	36	PB15	I/O	Digital I/O ; VCOM_RX
22	43	PC6	I/O	Digital I/O
23	44	PC7	I/O	Digital I/O
24	45	PC8	I/O t	Digital I/O
25	46	PC9	I/O	Digital I/O
26	47	PC10	I/O	Digital I/O
27	48	PC11	I/O	Digital I/O
28	14，15，37	GND	-	Ground
29	9，18，34，40	3.3V	I	DC3.3V supply
30				

3.4. Test Result of RF Performance

Figure3-17. Table 3-17 Receiving Sensitivity

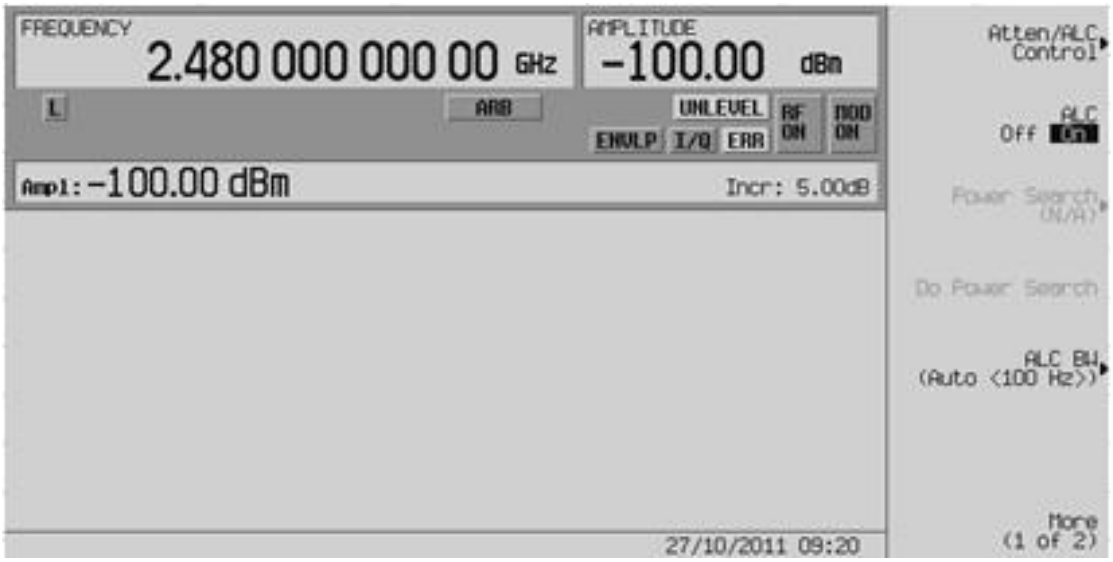

Figure 3-18. Test of Carrier Signal

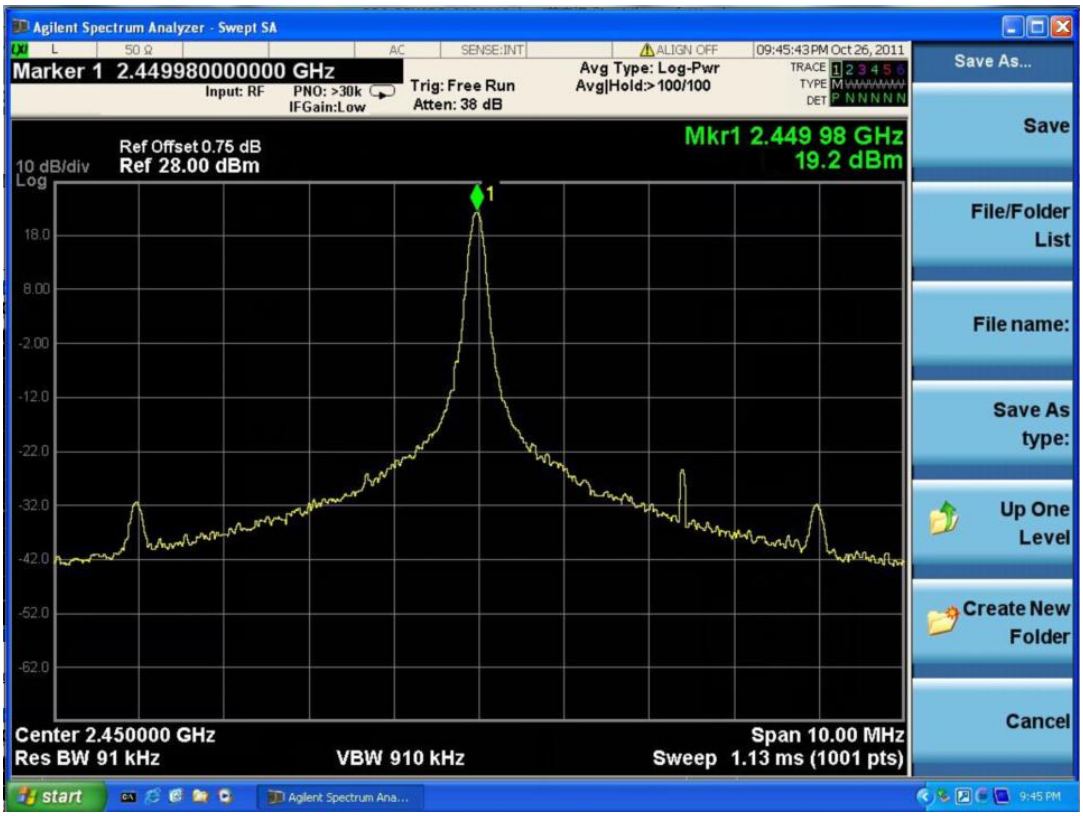

Figure 3-19. Test of Modulation Signal

3.6. Soldering Temperature for Module

The max temperature for soldering module shall be within 237-245℃ in 20s.

3.5. Packing Layout Of Module

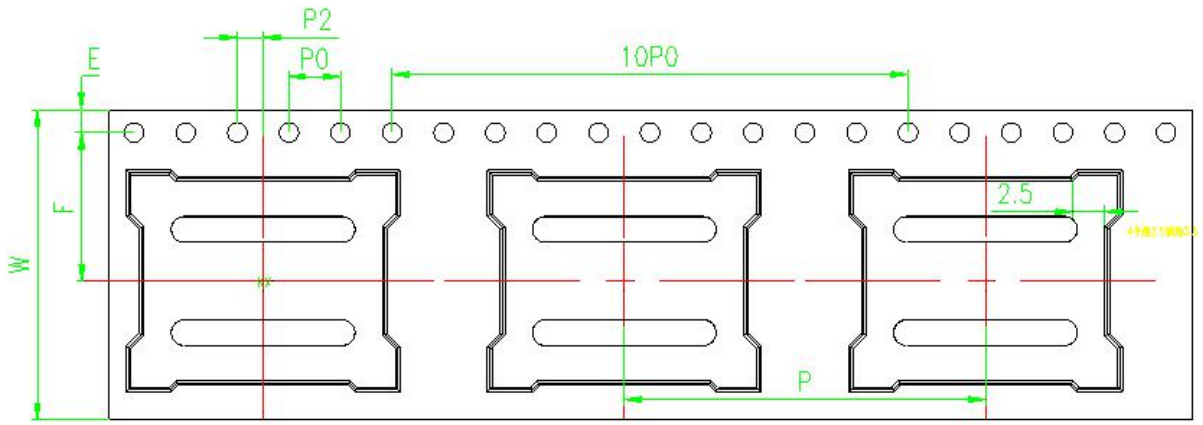

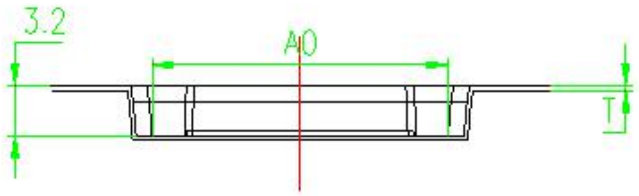

ITEM	SPEC(mm)
W	24.00±0.30
F	11.50±0.10
E	1.75±0.10
P	28.00±0.10
P2	2.00±0.10
ΦD0	$1.50^{+0.1}_{-0}$
P0	4.00±0.10
10P0	40.0±0.20
A0	18.50±0.10
B0	15.43±0.10
K0	3.20±0.10
T	0.40±0.05

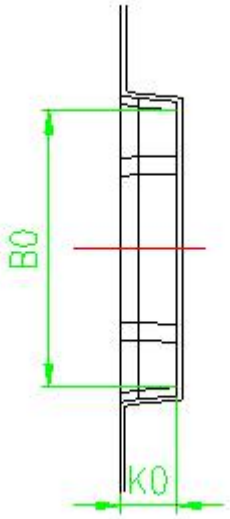

4. Ordering Information

REX 3 P 012 U - V4 B1 -

Manufacturer

REX=REXENSE

Series

3=Zigbee

Packaging Type

M=MINI zigbeemodule

B = Module for Smart Light(default)

P =EFR32 Ultra-small Module(default)

Chip Model

011= EFR32MG1B232F256

012= EFR32MG1B232F256(default)

136= EFR32MG13P632F512

137= EFR32MG13P732F512

Antenna

L=L, No IPEX connector

U=U.FL Interface(default)

Hardware Version

V4

Appearance

B1= Black Ink with Shielding（default）

B= Black Ink

G= Green Ink

1= With Shielding

0= Without Shielding

For Industrial Application

Blank=Normal 85℃（Default）

I =Industrial Application(Version for Hi-temp）

5. Contact Us

Zhejiang Raying IoT Technology Co., Ltd.

Add：10F,North of Building No.10,Wellong Science & Technology Park,
No.88 Jiangling Road, Binjiang District,Hangzhou,310051 China

Tel：+86-571-85395623

Fax：+86-571-87987620

Email: intl@rexense.com

Web：www.rexense.com

Antenna
Manufacturer: Shenzhen boantong technology co. LTD
深圳市博安通科技股份有限公司
Model: An2400p
Gain: 1.5dbi

FCC Statement
FCC standards: FCC CFR Title 47 Part 15 Subpart C Section 15.247
Exrernal antenna with antenna gain 1.5dBi

This device complies with part 15 of the FCC Rules. Operation is subject to the following two conditions: (1) This device may not cause harmful interference, and (2) this device must accept any interference received, including interference that may cause undesired operation.
Any Changes or modifications not expressly approved by the party responsible for compliance could void the user's authority to operate the equipment.
Note: This equipment has been tested and found to comply with the limits for a Class B digital device, pursuant to part 15 of the FCC Rules. These limits are designed to provide reasonable protection against harmful interference in a residential installation. This equipment generates, uses and can radiate radio frequency energy and, if not installed and used in accordance with the instructions, may cause harmful interference to radio communications. However, there is no guarantee that interference will not occur in a particular installation. If this equipment does cause harmful interference to radio or television reception, which can be determined by turning the equipment off and on, the user is encouraged to try to correct the interference by one or more of the following measures:
—Reorient or relocate the receiving antenna.
—Increase the separation between the equipment and receiver.
—Connect the equipment into an outlet on a circuit different from that to which the receiver is connected.
—Consult the dealer or an experienced radio/TV technician for help.

We will retain control over the final installation of the modular such that compliance of the end product is assured. In such cases, an operating condition on the limit modular approval for the module must be only approved for use when installed in devices produced by a specific manufacturer. If any hardware modify or RF control software modify will be made by host manufacturer,C2PC or new certificate should be apply to get approval,if those change and modification made by host manufacturer not expressly approved by the party responsible for compliance ,then it is illegal.

FCC Radiation Exposure Statement

This modular complies with FCC RF radiation exposure limits set forth for an uncontrolled environment. This transmitter must not be co-located or operating in conjunction with any other antenna or transmitter.

If the FCC identification number is not visible when the module is installed inside another device, then the outside of the device into which the module is installed must also display a label referring to the enclosed module. This exterior label can use wording such as the following: “Contains Transmitter Module FCC ID: 2AOE2-REX3P Or Contains FCC ID: 2AOE2-REX3P”
When the module is installed inside another device, the user manual of the host must contain below warning statements;
1. This device complies with Part 15 of the FCC Rules. Operation is subject to the following two conditions:
(1) This device may not cause harmful interference.
(2) This device must accept any interference received, including interference that may cause undesired operation.
Note: This equipment has been tested and found to comply with the limits for a Class B digital device, pursuant to part 15 of the FCC Rules. These limits are designed to provide reasonable protection against harmful interference in a residential installation. This equipment generates, uses and can radiate radio frequency energy and, if not installed and used in accordance with the instructions, may cause harmful interference to radio communications.
However, there is no guarantee that interference will not occur in a particular installation. If this equipment does cause harmful interference to radio or television reception, which can be determined by turning the equipment off and on, the user is encouraged to try to correct the interference by one or more of the following measures:
—Reorient or relocate the receiving antenna.
—Increase the separation between the equipment and receiver.
—Connect the equipment into an outlet on a circuit different from that to which the receiver is connected.
—Consult the dealer or an experienced radio/TV technician for help.

2. Changes or modifications not expressly approved by the party responsible for compliance could void the user's authority to operate the equipment.
The devices must be installed and used in strict accordance with the manufacturer's instructions as described in the user documentation that comes with the product.
Any company of the host device which install this modular with limit modular approval should perform the test of radiated & conducted emission and spurious emission,etc. according to FCC part 15C : 15.247 and 15.209 & 15.207 ,15B Class B requirement, Only if the test result comply with FCC part 15C : 15.247 and 15.209 & 15.207 ,15B Class B requirement， then the host can be sold legally.