Lierda SB16 Series Hardware Design Manual

Date: 23/08/14

Address：Lierda Internet of Things Technology Park, No.1326 Wenyi West Road, Hangzhou Tel：0571-88800000

Legal Notices

By receiving this document from Lierda Technology Group Corporation (hereinafter referred to as "Lierda"), you agree to the following terms. If you do not agree to the following terms, please stop using this document.

This document is copyrighted by Toledo Technology Group Corporation, with any rights not expressly granted in this document reserved. The document contains proprietary information of Lierda. This document and any images, forms, data and other information contained in this document may not be reproduced, transmitted, distributed, used or disclosed by any entity or individual without the prior written permission of Lierda.

This product complies with the design requirements regarding environmental protection and personal safety. The storage, use and disposal of the product should be carried out in accordance with the requirements of the product manual, the relevant contract or the relevant laws and regulations.

The Company reserves the right to make changes and improvements to the products described in this manual without prior notice; it also reserves the right to revise or withdraw this manual at any time.

Document revision history

Document version	Date of change	proposer	auditor	Changes

Lierda 利尔达

Safety instructions

It is the user's responsibility to follow the relevant regulations of other countries and the specific environmental regulations for the use of wireless communication modules and equipment. By observing the following safety principles, you can ensure your personal safety and help to protect the product and the working environment from potential damage. We are not liable for damages related to the customer's failure to comply with these regulations.

	Safety on the road comes first! When you are driving, do not use hand-held mobile terminal devices unless they have a hands-free function. Please stop the car before making a call!
	Please turn off your mobile devices before boarding the airplane. The wireless function of mobile devices is prohibited on board to prevent interference with the aircraft's communication system. Ignoring this reminder may lead to flight safety or even violate the law.
	When in a hospital or health care setting, note if there are restrictions on the use of mobile devices.RF interference can cause medical equipment to malfunction, so it may be necessary to turn off the mobile device.
	The mobile device does not guarantee a valid connection in all circumstances, for example if the mobile device is out of credit or the SIM is invalid. When you are in an emergency situation, please remember to use the emergency call and make sure that your device is switched on and in an area with sufficient signal strength.
	Your mobile device receives and transmits RF signals when it is switched on, which can cause RF interference when near a TV, radio computer or other electronic device.
	Keep the mobile terminal unit away from flammable gases. Turn off the mobile device when you are near gas stations, oil depots, chemical plants, or explosive workplaces. It is a safety hazard to operate electronic devices in any place where there is a potential explosion hazard.

Applicable modules Options

serial number	Module Model	Supported Frequency Bands	sizes	Module Introduction
1	L-BTMSB16-G0NP4	2.4 GHz ISM Band	9.4x14x2.4mm	

Lierda 利尔达

Catalogs

Legal Notices 1
Document Revision History 2
Safety Instructions 3
Applicable Module Selection 4
1 Introduction 7
2 Product overview 8
2.1 Key features 8
2.2 Product Advantages 8
2.3 Application Scenarios 8
2.4 Functional Block Diagrams 9
2.5 Pinouts 9
2.6 Pin Description Table 10
3 Application interfaces 12
3.1 UUART communication 12
3.1.1 Main serial port 12
4 Specifications 12
5 Application notes 14
5.1 Baseboard Layout Considerations 14
5.2 Notes 15
6 Mechanical dimensions 17
7 Production and Packaging Information 18
7.1 Production welding 18
7.1.1 Production guidelines 18
7.1.2 Requirements for module location on the base plate 18
7.1.3 Stencil opening design 19
7.1.4 Production Considerations 19

7.1.5 Reflow soldering instructions 20
7.2 Packaging specifications 21
7.2.1 Packaging methods 21
7.2.2 Belt Size and Product Orientation 21

Lierda 利尔达

1 Introduction

SB16 series standard Bluetooth module is a high-performance IoT Bluetooth transceiver developed based on FR801X chip platform. The module adopts postage-stamp package and supports external antenna and on-board PCB antenna. At the same time, the module also supports 105℃ working temperature, which can adapt to high temperature scenarios. The product also features low power consumption, small size, and strong anti-interference capability.

Lierda 利尔达

2 Product Overview

2.1 Key Features

connector	Stamp Interface
wireless standard	BLE5.0
Module Packaging	9.4x14x2.4mm
operating voltage	1.8V~4.3V, 3.3V typical
operating frequency	2402~2480MHZ(2.4 GHz ISM Band)
operating temperature	-40 ~ +105°C
Storage temperature	-40 ~ +105°C

2.2 Product Advantages

- Protocol stack version: supports Bluetooth 5.0
- Chip core: ARM® Cortex®-M3 32-bit processor, 48 MHz
- Storage Resources: 512KB Flash + 48 KB RAM
- Physical layer rate: 1 Mbps
- Receiving sensitivity: -94dBm in 1Mbps
- Output power: MAX +10dBm
- Operating voltage: 1.8 - 4.3V, 3.3V typical
- Interface resources: 10*GPIOs, 2*UARTs
- Working temperature: -40 ~ 105°C

2.3 application scenario

- 2.4GHz low power Bluetooth system;
- PCs, tablets, cell phones, handhelds, and other low-power peripherals (HIDs, remote controls, etc.);
- Sports, healthcare and other consumer electronics;
- Wireless sensor networks for smart meters, data acquisition, etc;
- Photovoltaic, charging pile, industrial instrumentation and other industries;
- Smart home, LAN, interactive devices, beacon lights;

2.4 functional block diagram

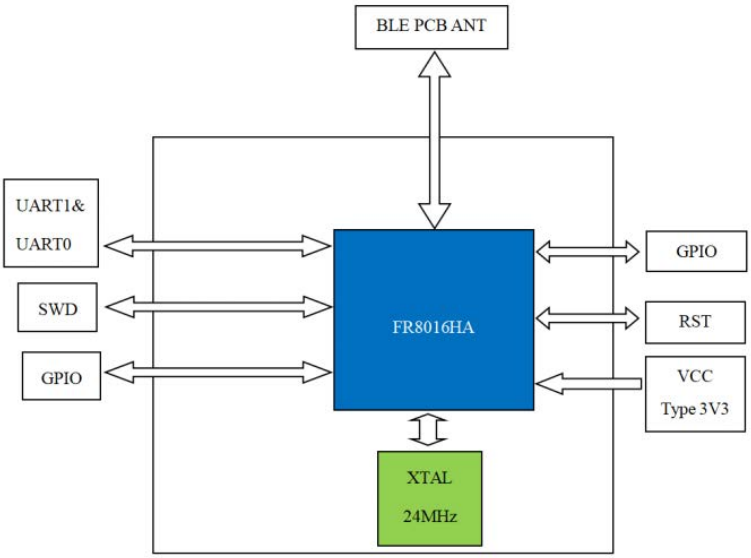

Figure 2.1 Functional Block Diagram

2.5 Pinouts

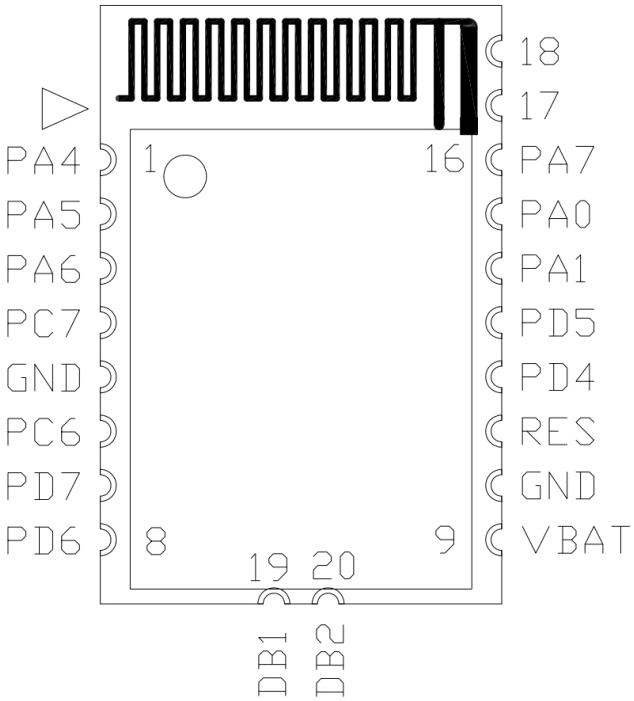

Figure 2-2 Pin Distribution Diagram

2.6 Pin Description Table

pin	Pin Definitions	I/O Type	Functional Description
1	PA4	IO	SCL0/I2SCLK/PWM4/SSPCLK/**URXD0**/ URXD1/CLKOUT/PDMCLK/PWM5
2	PA5	IO	SDA0/I2SFRM/PWM5/SSPCSN/**UTXD0**/ UTXD1/ANTCTL1/PDMDAT/PWM4
3	PA6	IO	SCL1/I2SDOUT/PWM0/SSPDOUT/URXD0/ URXD1/CLKOUT/PDMCLK/PWM1
4	PC7	IO	SDA1/I2SDIN/PWM5/SSPDIN/UTXD0/ UTXD1/**SWDIO**/PDMDAT/PWM4
5	GND	G	Ground
6	PC6	IO	SCL1/I2SDOUT/PWM4/SSPDOUT/URXD0/ URXD1/**SWTCK**/PDMCLK/PWM5
7	PD7	IO	SDA1/I2SDIN/PWM1/SSPDIN/UTXD0/ UTXD1/ANTCTL1/PDMDAT/PWM0/ADC3
8	PD6	IO	SCL1/I2SDOUT/PWM0/SSPDOUT/URXD0/ URXD1/CLKOUT/PDMCLK/PWM1/ADC2
9	VBAT	P	Positive Supply Input
10	GND	G	Ground
11	RES	I	Global Reset (low active)
12	PD4	IO	SCL0/I2SCLK/PWM4/SSPCLK/URXD0/ URXD1/ANTCTL0/PDMCLK/PWM5/ADC0
13	PD5	IO	SDA0/I2SFRM/PWM5/SSPCSN/UTXD0/ UTXD1/ANTCTL0/PDMDAT/PWM4/ADC1
14	PA1	IO	SDA0/I2SFRM/PWM1/SSPCSN/UTXD0/ UTXD1/ANTCTL0/PDMDAT/PWM0
15	PA0	IO	SCL0/I2SCLK/PWM0/SSPCLK/URXD0/ URXD1/CLKOUT/PDMCLK/PWM1
16	PA7	IO	SDA1/I2SDIN/PWM1/SSPDIN/UTXD0/ UTXD1/ANTCTL0/PDMDAT/PWM0
17	\	R	RESERVED
18	\	R	RESERVED
19	DB1	R	Debug Only,Not Recommend

20	DB2	R	Debug Only,Not Recommend

NOTE: 1. "P":POWER "I":INPUT "O":OUTPUT "G":GND "R":Reserved ":GND "R":Reserved

2. DB1 is internally connected to PA3 and DB2 is connected to PA2 ,they are for debugging only and are not recommended.

3. PIN17 and PIN18 aren't used for L-BTMSB16-G0NP4 ,must be kept unconnected.They are reserved for other types.

Lierda 利尔达

3 Application interface

3.1 UART Communication

The SB16 module provides one main UART0 communication interface.

3.1.1 Main serial port

The main serial port UART0 is defaulted to PA5 (TXD0) and PA4 (RXD0) for command configuration and data transmission, the default baud rate is 115200bps, and the serial port connection schematic is as follows:

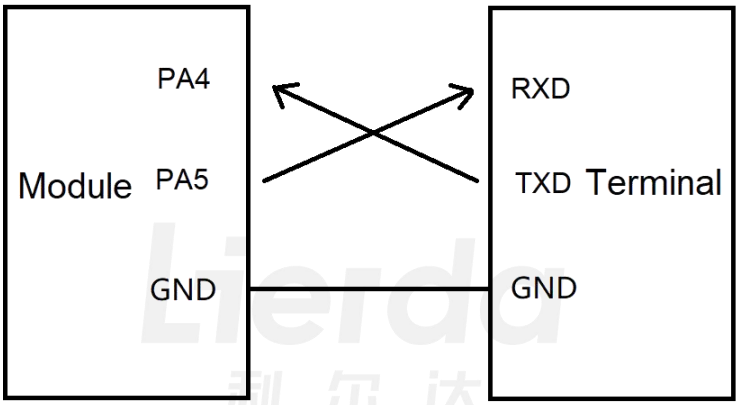

Figure 3-1 UART0 Connection Diagram

4 Specification

Table 4-1 Product Limit Parameters

Main parameters	performances		note
	Min value	Max values	
Supply Voltage (V)	1.8	4.3	/
IO Voltage (V)	-0.3	VDDIO+0.3	VDDIO = 3.3V
Storage temperature (℃)	-40	105	/
Working temperature (℃)	-40	105	/
V_{ESD}	4000V		VBAT&ANT PIN ESD performance

Table 4-2 Module Operating Parameters @25°C

Main parameters	performances			note
	minimum value	typical value	maximum values	
Operating voltage (V)	1.8	3.3	4.3	Ripple V_{PP} Less than 30mV
Operating frequency band (MHz)	2402	/	2480	/
Emission current (mA)	/	14.7	/	@1Mbps,0dbm,DC/DC
Receiving current (mA)	/	19	/	@1Mbps, DC/DC
Sleep current (μ A)	/	3.3	/	Power off state
operating mode	1Mbps			/
communications protocol	Bluetooth 5.0			/
Number of channels	40			/
Modulation Type	GFSK			/
Transmit power (dbm)	-20	/	10	/
Receiving sensitivity (dbm)	/	-94	/	@1Mbps, PER=30.8%

5 Application Notes

5.1 Baseboard Layout Considerations

The antenna needs to be surrounded by as large a headroom area as possible. The headroom refers to the open area within the projection area of the vertical plane of the antenna (the upper and lower ranges should be considered). Within the projection area of the antenna, whether patch or side insertion method, do not pave the ground (especially for board mounted antennas), there can be no metal devices, to maintain the antenna's headroom, in order to improve the antenna radiation efficiency. The RF part of the module should avoid being wrapped by the metal cavity as much as possible, and the distance between the RF part and the interference source should be more than 10mm (the bigger the better if the conditions allow). Common sources of interference include: batteries (including electrical connector), capacitors, inductors, pushbuttons, oscillators, power cables, screws or nuts containing metal, CPUs, LCDs, transformers, speakers, cameras, wiring of the product's internal communication interface, power supply circuits, motors, and so on.

Baseboard Layout Requirements.

Module PCB antenna should be in the whole bottom PCB edge, PCB antenna to keep 10mm spacing around the antenna, antenna around the layers can not cloth copper, wire, layout components; if there are a variety of antennas, antennas and antennas should be as far away as possible between the distance, to avoid the same frequency interference and cross-modulation interference. The following figure around the antenna, including the upper and lower vertical range can not have metal devices, it is recommended to stick on the base plate, this part of the region hollow processing. The following figure in the gray area of the laying copper size is recommended in 4 * 4cm.

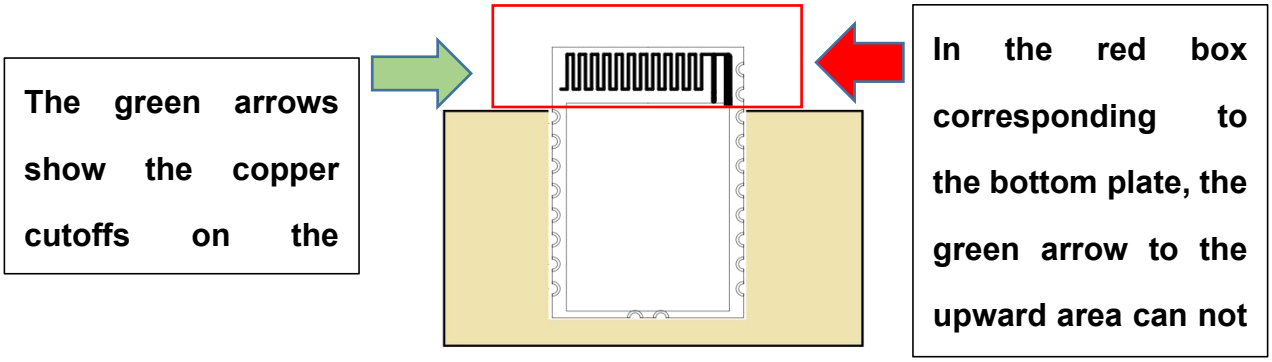

Figure 5-1 Recommended Reference Placement of Modules

Description of test points at the Module Bottom level:

RF performance of the test pads have a windowed area (that is, exposed copper), the base plate mapped to the location can not be placed over the hole or exposed copper, and should be covered with white oil to prevent short-circuit. It is recommended that the bottom of the board alignment or exposed copper to avoid the red box area in the following figure.

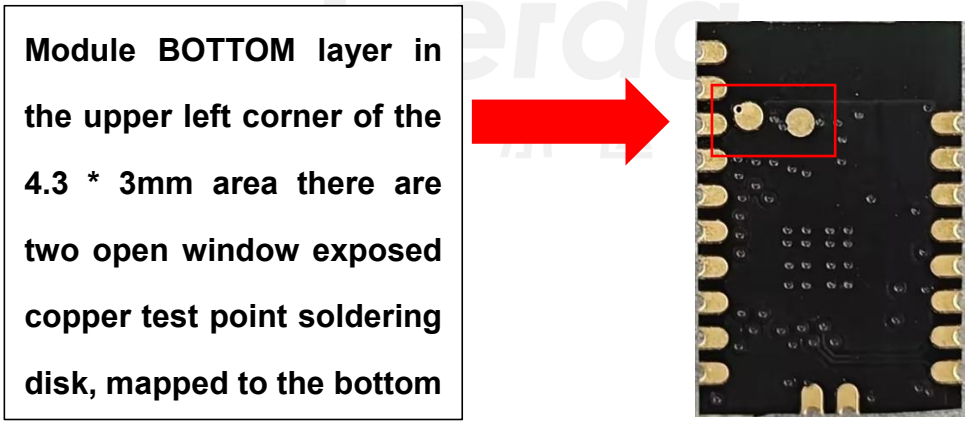

Figure 5-2 Test Spot Solder Pad Locations on the Bottom of the Module

5.2 caveat

1. power supply

It is recommended to use a DC regulated power supply to power the module, the power supply ripple is as small as possible, usually requires a ripple of less than 30mV, the ripple is too large will lead to poor sensitivity and other connection anomalies. At the same time, the Bluetooth transmitting signal will be coupled into the interference signal, resulting

in RF indicators beyond the Bluetooth specification, which will cause serious failure to connect and communicate. Try to use LDO to provide power to the module, and at the same time, LDO should be far away from DC-DC power supply and inductance to prevent DC-DC radiation from polluting the power supply of LDO. The module needs to be grounded reliably, and please pay attention to the correct connection of the positive and negative poles of the power supply, such as reverse connection may lead to permanent damage to the module.

A 10uF and 0.1uF decoupling capacitor is recommended for the SB16 module power pin (VBAT). The capacitor should be as close as possible to the VDD power supply pin. The power supply voltage range is 1.8~4.3V, and when using 3.3V power supply, we need to ensure that the power supply voltage is not lower than 1.8V. The VDD pin needs to meet the power supply capacity of 150mA peak current, and the power supply ripple is recommended to be less than 30mV, so as to avoid excessive ripple caused by the degradation of RF performance. The recommended circuits for power supply are as follows:

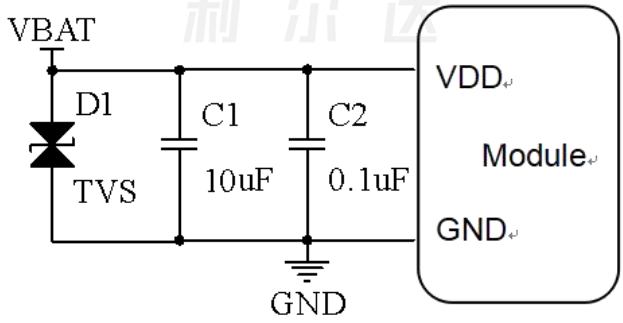

Figure 5-3 Power Supply Recommended Design

Note: D1 TVS static protection is used, it is recommended to place a TVS tube for static protection.

2. ESD Electrostatic discharge protection

Users need to pay attention to the electrostatic requirements of the product during design, see Table 4-1, and add electrostatic protection measures to the design of the end product.

6 Mechanical dimensions

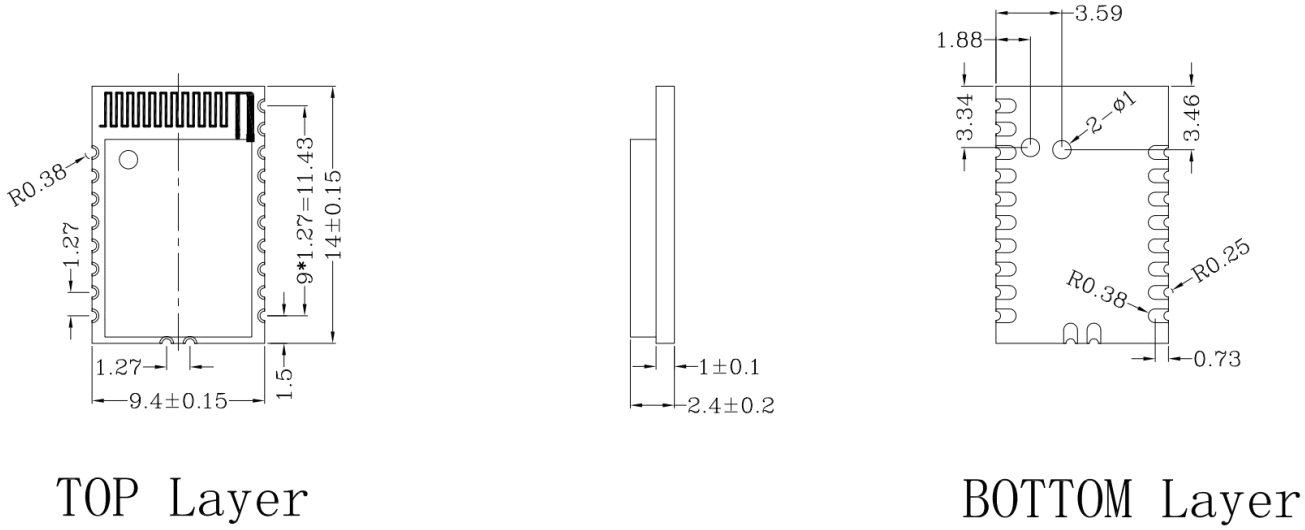

Figure 6-1 Module external dimensions

7 Production and Packaging Information

7.1 Production Welding

7.1.1 Production Guidelines

It is recommended that the stamp port encapsulated module be mounted using SMT machine and the mounting should be completed within 24 hours after unpacking, otherwise it should be re-vacuum-packed to avoid moisture leading to poor mounting.

If the package contains a humidity indication card, it is recommended to judge whether the module needs to be baked according to the humidity card indication, and the conditions during baking are as follows:

Baking temperature: 125℃±5℃;

The alarm temperature is set to 130°C;

After cooling <36℃ under natural conditions, it is ready for SMT placement;

If the unpacking time is more than 3 months, you need to pay special attention to whether the product is affected by moisture, because the PCB immersed gold process, more than 3 months may lead to oxidation of the pads, the patch may lead to false soldering, leakage of soldering and other problems.

In order to ensure that the reflow soldering pass rate, the first patch is recommended to take 10% of the products for visual inspection, AOI testing to ensure that the furnace temperature control, device adsorption method, placement of the rationality of the way;

Operators at each station must wear electrostatic gloves during the entire production process.

7.1.2 Module location requirements at the base plate

It is recommended that the base plate module location of the green oil thickness of less than 0.02mm, to avoid excessive thickness, padding module can not effectively contact with the solder paste affects the welding quality. Also need to consider the interface board

module location within 2mm around the layout of other devices, in order to protect the maintenance of the module.

7.1.3 Stencil opening design

The thickness of the stencil on the base plate is selected in principle according to the type of packaging of the device on the board to be selected, need to focus on the following requirements:

Module pad locations can be locally thickened to 0.15~0.20mm to avoid void soldering.

7.1.4 Production Precautions

- During the production process, each operator must wear electrostatic gloves;
- Baking should not exceed the specified baking time;
- It is strictly prohibited to add explosive, flammable and corrosive substances during baking;
- During baking, modules should be placed in high temperature trays to maintain air circulation between modules;
- The door of the baking box needs to be closed during baking to ensure that the baking box is closed and to prevent the temperature from leaking out;
- Try not to open the door when the oven is running, if you have to open it, try to shorten the time you can open the door;
- After baking, wait until the module cools down naturally to below 36℃ before taking it out with electrostatic gloves to avoid burns;
- When operating, do not allow the bottom surface of the module to get wet or dirty;

7.1.5 Reflow soldering work instructions

Note: This work instruction is suitable for lead-free work only and is for reference only.

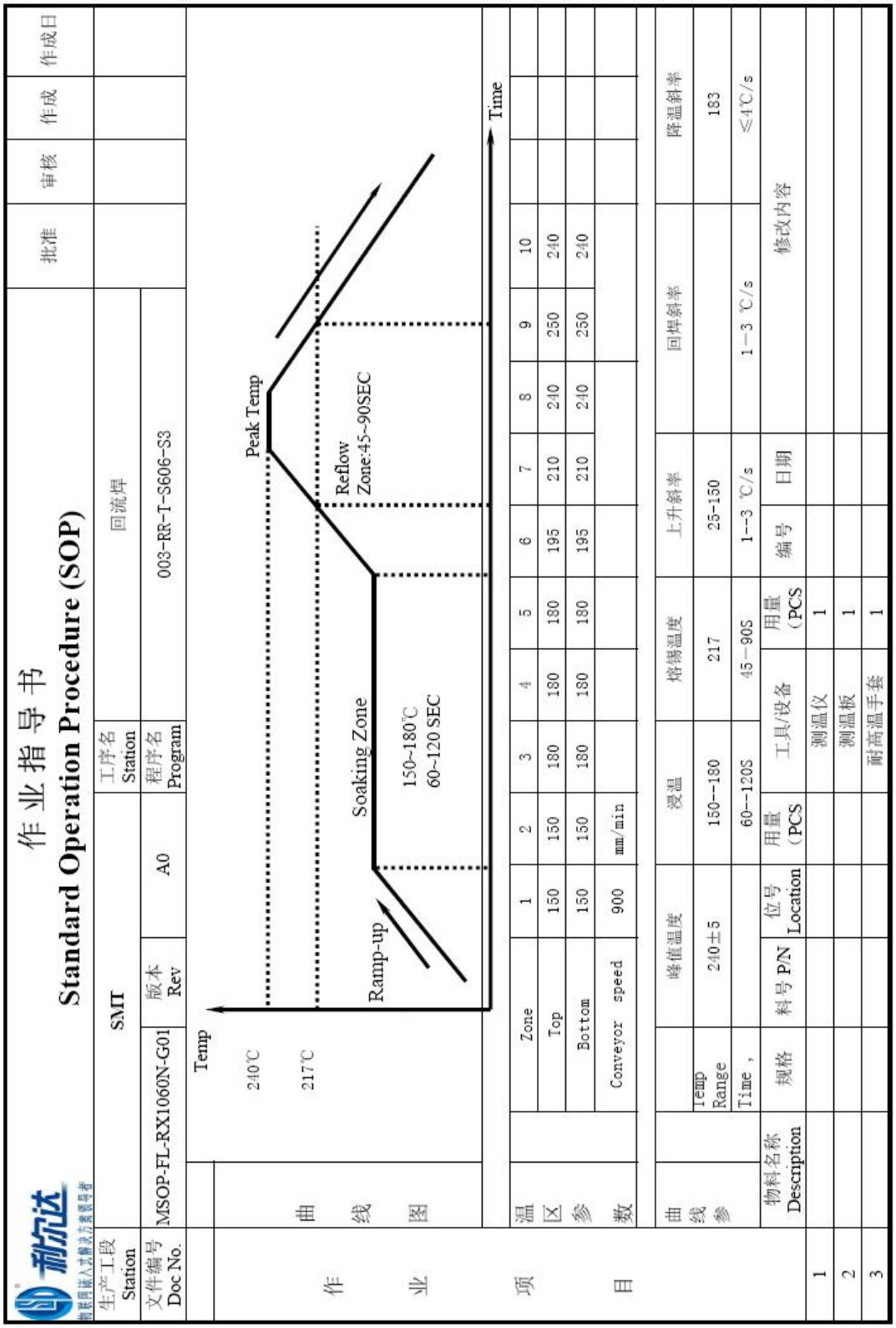

Figure 7-1 Reflow Soldering Operating Instructions

7.2 Packaging specification

7.2.1 Packaging

model number	Packaging	Full Carton(PCS)	Minimum Packing Quantity (PCS)	Number of reels per case
L-BTMSB16-G0BP4	reel	6500	1300	5

7.2.2 Belt size and product orientation

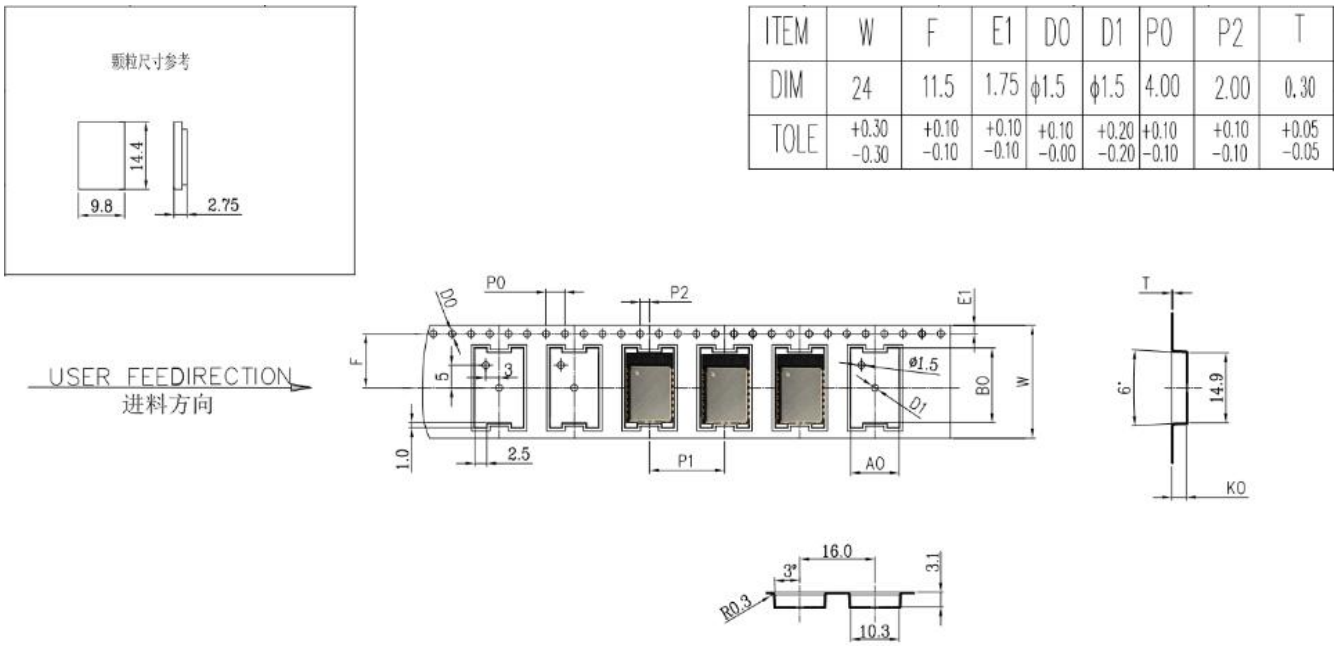

ITEM	W	F	E1	D0	D1	P0	P2	T
DIM	24	11.5	1.75	ϕ1.5	ϕ1.5	4.00	2.00	0.30
TOLE	+0.30 −0.30	+0.10 −0.10	+0.10 −0.10	+0.10 −0.00	+0.20 −0.20	+0.10 −0.10	+0.10 −0.10	+0.05 −0.05

Figure 7-2 Belt Size and Product Orientation

Federal Communication Commission (FCC) Radiation Exposure Statement

When using the product, maintain a distance of 20cm from the body to ensure compliance with RF exposure requirements.

This device complies with part 15 of the FCC rules. Operation is subject to the following two conditions: (1) this device may not cause harmful interference, and (2) this device must accept any interference received, including interference that may cause undesired operation.

NOTE: The manufacturer is not responsible for any radio or TV interference caused by unauthorized modifications or changes to this equipment. Such modifications or changes could void the user's authority to operate the equipment.

NOTE: This equipment has been tested and found to comply with the limits for a Class B digital device, pursuant to part 15 of the FCC Rules. These limits are designed to provide reasonable protection against harmful interference in a residential installation. This equipment generates uses and can radiate radio frequency energy and, if not installed and used in accordance with the instructions, may cause harmful interference to radio communications. However, there is no guarantee that interference will not occur in a particular installation. If this equipment does cause harmful interference to radio or television reception, which can be determined by turning the equipment off and on, the user is encouraged to try to correct the interference by one or more of the following measures:

- Reorient or relocate the receiving antenna.
- Increase the separation between the equipment and receiver.
- Connect the equipment into an outlet on a circuit different from that to which the receiver is connected.
- Consult the dealer or an experienced radio/TV technician for help.

FCC Caution: Any changes or modifications not expressly approved by the party responsible for compliance could void the user's authority to operate this equipment.

ORIGINAL EQUIPMENT MANUFACTURER (OEM) NOTES

The OEM must certify the final end product to comply with unintentional radiators (FCC Sections 15.107 and 15.109) before declaring compliance of the final product to Part 15 of the FCC rules and regulations. Integration into devices that are directly or indirectly connected to AC lines must add with Class II Permissive Change.

The OEM must comply with the FCC labeling requirements. If the module's label is not visible when installed, then an additional permanent label must be applied on the outside of the finished product which states: "Contains transmitter module FCC ID: 2AOFDL-BTMSB16. Additionally, the following statement should be included on the label and in

the final product's user manual: "This device complies with Part 15 of the FCC Rules. Operation is subject to the following

two conditions: (1) This device may not cause harmful interferences, and

(2) this device must accept any interference received, including interference that may cause undesired operation."

The module is allowed to be installed in mobile and portable applications A module or modules can only be used without additional authorizations if they have been tested and granted under the same intended end - use operational conditions, including simultaneous transmission operations. When they have not been tested and granted in this manner, additional testing and/or FCC application filing may be required. The most straightforward approach to address additional testing conditions is to have the grantee responsible for the certification of at least one of the modules submit a permissive change application. When having a module grantee file a permissive change is not practical or feasible, the following

guidance provides some additional options for host manufacturers. Integrations using modules where additional testing and/or FCCapplication filing(s) may be required are: (A) a module used in devices requiring additional RF exposure compliance information (e.g., MPE evaluation or SAR testing); (B) limited and/or split modules not meeting all of the module requirements; and (C) simultaneous transmissions for independent collocated transmitters not previously granted together.

This Module is full modular approval, it is limited to OEM installation ONLY. Integration into devices that are directly or indirectly connected to AC lines must add with Class II Permissive Change. (OEM) Integrator has to assure compliance of the entire end product include the integrated Module. Additional measurements (15B) and/or equipment authorizations(e.g. Verification) may need to be addressed depending on co-location or simultaneous transmission issues if applicable.(OEM) Integrator is reminded to assure that these installation instructions will not be made available to the end user.

Lierda 利尔达