Lierda DB37 Series Hardware Design Manual

Version： Rev0.1

Date： 24/07/01

公司地址：杭州市文一西路 1326 号利尔达物联网科技园 Tel：0571-88800000

Legal Notices

If you receive this document from Lierda Technology Group Co., Ltd. (hereinafter referred to as "Lierda"), you have agreed to the following terms. If you do not agree to the following terms, please stop using this document.

The copyright of this document is owned by Lierda Technology Group Co., Ltd., and any rights not expressly granted in this document are reserved. The document involves Lierda's proprietary information. Without the prior written permission of Lierda, no unit or individual may copy, transmit, distribute, use and disclose this document and any pictures, forms, data and other information contained in this document.

This product complies with the design requirements for environmental protection and personal safety. The storage, use and disposal of the product should be carried out in accordance with the requirements of the product manual, relevant contracts or relevant laws and regulations.

The company reserves the right to modify and improve the products described in this manual without prior notice; at the same time, it reserves the right to revise or withdraw this manual at any time.

Company Address: Lierda Internet of Things Technology Park, No. 1326 Wenyi West Road, Hangzhou

Tel：0571-88800000

Revision History

Version	Date	Draft	Approved	Revision Content
Rev0.1	24-07-01	TYY	YB	Initial version

Lierda
利尔达

Company Address: Lierda Internet of Things Technology Park, No. 1326 Wenyi West Road, Hangzhou

Tel：0571-88800000

Safety Instructions

It is the user's responsibility to follow the relevant regulations of other countries on wireless communication modules and equipment, as well as their specific operating environment regulations. By following the safety principles below, you can ensure personal safety and help protect the product and work environment from potential damage. Our company is not responsible for related losses caused by customers' failure to follow these regulations.

	Road safety first! Do not use a handheld mobile terminal while driving unless it has a hands-free function. Please stop and call again!
	Please turn off the mobile terminal device before boarding the plane. The wireless function of the mobile terminal is prohibited on the aircraft to prevent interference with the aircraft communication system. Ignoring this prompt may affect flight safety or even violate the law.
	Please turn off the mobile terminal device before boarding the plane. The wireless function of the mobile terminal is prohibited on the aircraft to prevent interference with the aircraft communication system. Ignoring this prompt may affect flight safety or even violate the law.
	The mobile terminal device does not guarantee a valid connection in all cases, eg no call charges or SIM invalidation on the mobile terminal device. When you encounter the above situations in an emergency, please remember to use the emergency call, and at the same time make sure that your device is powered on and in an area with sufficient signal strength.
	Your mobile terminal equipment will receive and transmit radio frequency signals when it is turned on, and radio frequency interference will be generated when it is close to a TV, radio, computer or other electronic equipment.
	Please keep the mobile terminal away from flammable gas. When you are close to gas stations, oil depots, chemical plants or explosive workplaces, please turn off the mobile terminal device. Operating electronic equipment in any potentially explosive atmosphere is a safety hazard.

Company Address: Lierda Internet of Things Technology Park, No. 1326 Wenyi West Road, Hangzhou

Tel：0571-88800000

Applicable Module Selection

No.	Module Name	Support Frequency Band	Dimension	Description
1	L-NLEDB37-G5NN4	2.4 GHz ISM Band	12*12 mm	Wi-Fi+BLE

Lierda
利尔达

Company Address: Lierda Internet of Things Technology Park, No. 1326 Wenyi West Road, Hangzhou

Tel：0571-88800000

Contents

Legal Notices 1
Revision History 2
Safety Instructions 3
Applicable Module Selection 4
Contents 5
1 Introduction 7
2 Overview 8
2.1 General Specification 8
2.2 Features 8
2.3 Applications 8
2.4 Block Diagram 9
2.5 Pin Assignments 10
2.6 Pin Definition 10
3 Performance Characteristics 13
3.1 Power Supply Design 13
3.1.1 Power Interface 13
3.1.2 Power Supply Design 13
4 Application Interface 15
4.1 SDIO Interface 15
4.1.1 SDIO Interface Description 15
4.1.2 SDIO Circuit Reference Design 15
5 RF Characteristics 17
5.1 Antenna Interface 17
5.2 Wi-Fi Characteristics 17

Company Address: Lierda Internet of Things Technology Park, No. 1326 Wenyi West Road, Hangzhou

Tel：0571-88800000

5.3 BLE Performance 18
5.4 Reference Design 19
6 Electrical Performance and Reliability 22
6.1 Value of Power Supply 22
6.2 Power Consumption 22
6.3 Performance Temperature 22
7 Reference Design 23
7.1 points for attention 23
8 Mechanical dimensions 24
9 Production and Packaging Information 25
9.1 Production Welding 25
9.1.1 Production Instructions 25
9.1.2 Module location requirements on the backplane 25
9.1.3 Stencil Opening Design 26
9.1.4 Production Notes 26
9.1.5 Recommended Reflow Profile 27
9.2 Package Information 28
9.2.1 Packaging Method 28
9.2.2 Carrier Size Detail 28

Company Address: Lierda Internet of Things Technology Park, No. 1326 Wenyi West Road, Hangzhou

Tel：0571-88800000

1 Introduction

The DB37 series module is a Wi Fi 6 module that supports IEEE 802.11b/g/n/ax @ 2.4GHz and BLE5.2, and supports SDIO 2.0 interface. This module supports 802.11n 20MHz/40MHz bandwidth and 802.11ax 20MHz bandwidth, providing a maximum physical layer rate of 150Mbps and longer coverage distance; It can be widely used in fields such as IPC, monitoring gimbal, smart home, security equipment, driving recorder, and intelligent access control.

Figure 1.1 DB37 series module

Company Address: Lierda Internet of Things Technology Park, No. 1326 Wenyi West Road, Hangzhou

Tel：0571-88800000

2 Overview

2.1 General Specification

Table 2-1 General Specification

Interface	Stamp hole
Wireless Standard	IEEE 802.11b/g/n/ax+BLE5.2
Dimension	12 mm × 12 mm
Operating Voltage	3.0V~3.6V，Typ. 3.3V
Frequency Range	2400~2483.5MHZ (2.4GHz ISM Band)
Operating Temperature	-40 ~ +85℃
Communication Interface	SDIO 2.0
Bandwidth	Support 20/40MHz bandwidth
MAC	IEEE 802.11d/e/i/k/v/w

2.2 Features

1) Support IEEE 802.11b/g/n/ax@2.4G

2) Support BLE 5.2

3) Support STA、AP、Wi-Fi Direct Mode

4) Support WEP/WPA/WPA2/WPA3-SAE Personal，MFP band

5) Support Wi-Fi and BLE TDM

6) Support SDIO 2.0 Interface

7) Support OFDMA

2.3 Applications

- IPC and Monitoring gimbal
- Smart home and security equipment
- Driving recorder

Company Address: Lierda Internet of Things Technology Park, No. 1326 Wenyi West Road, Hangzhou

Tel：0571-88800000

- Intelligent access control

2.4 Block Diagram

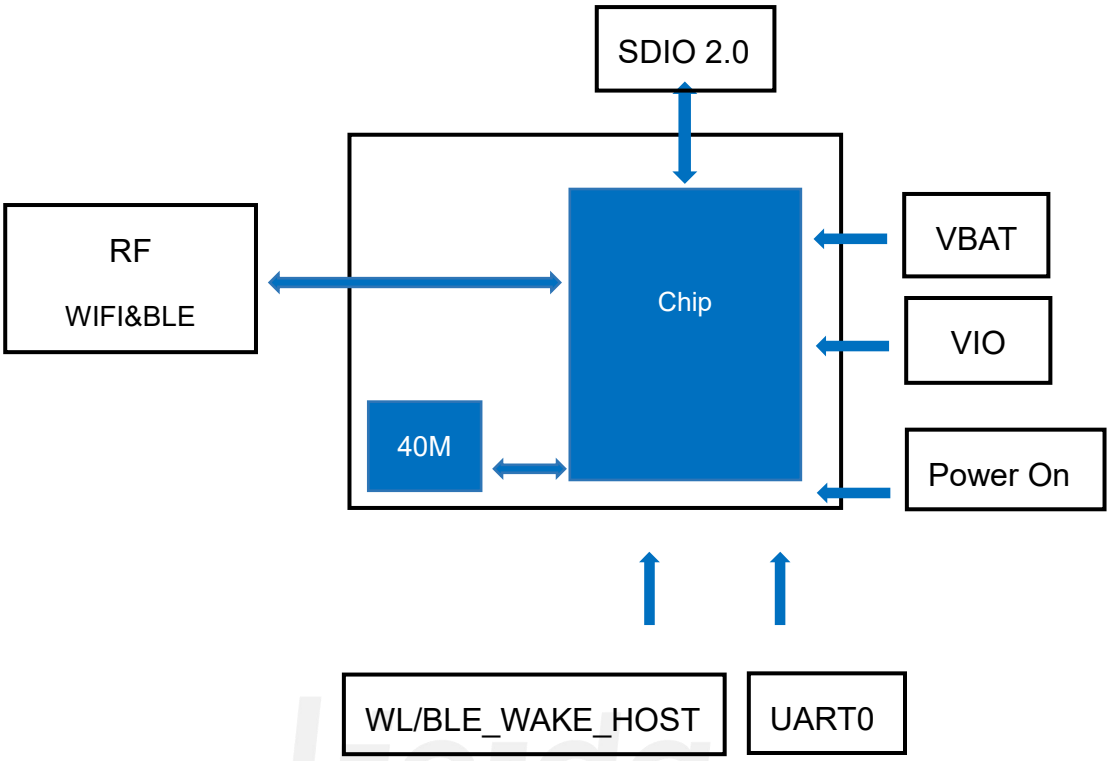

Figure 2.1 Block Diagram

Company Address: Lierda Internet of Things Technology Park, No. 1326 Wenyi West Road, Hangzhou

Tel：0571-88800000

2.5 Pin Assignments

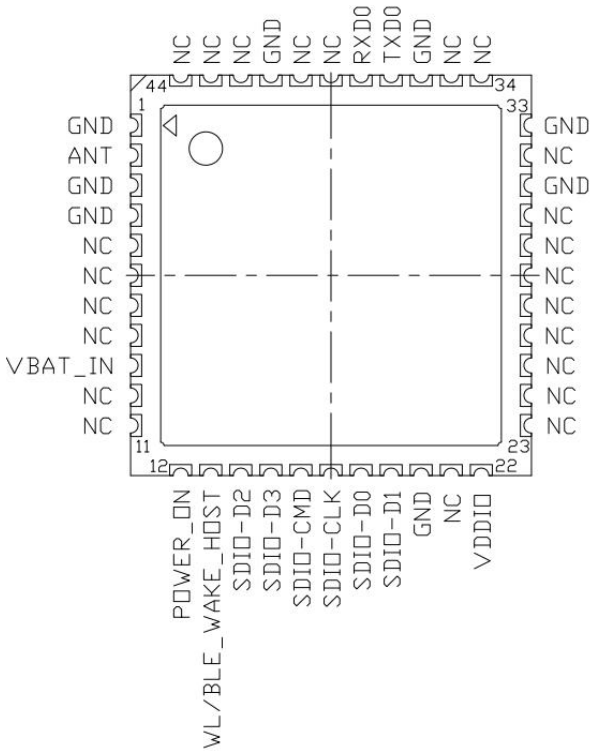

Figure 2.2 Pin Outline

2.6 Pin Definition

Table 2-2 Pin Definition

No.	Pin Name	I/O Type	Voltage	Description
1	GND	G	–	Ground
2	ANT	RF	–	2.4G Wi-Fi&BT Port
3	GND	G	–	Ground
4	GND	G	–	Ground
5	NC	NC	–	Pulled up and not connected
6	NC	NC	–	Pulled up and not connected
7	NC	NC	–	Pulled up and not connected
8	NC	NC	–	Pulled up and not connected

Company Address: Lierda Internet of Things Technology Park, No. 1326 Wenyi West Road, Hangzhou

Tel：0571-88800000

9	VBAT_IN	P	3.3V	Power Supply
10	NC	NC	–	Pulled up and not connected
11	NC	NC	–	Pulled up and not connected
12	POWER_ON	I	VIO	Module-enable signal, Active high
13	WL/BLE_WAKE_HOST	O	VIO	Wake up pin, Wi Fi/BLE wake-up HOST
14	SDIO_D2	I/O	VIO	SDIO DATA2
15	SDIO_D3	I/O	VIO	SDIO DATA3
16	SDIO_CMD	I/O	VIO	SDIO Command/Response
17	SDIO_CLK	I	VIO	SDIO Clock
18	SDIO_D0	I/O	VIO	SDIO DATA0
19	SDIO_D1	I/O	VIO	SDIO DATA1
20	GND	G	–	Ground
21	NC	NC	–	Pulled up and not connected
22	VDDIO	P	VIO	IO Power Supply
23	NC	NC	–	Pulled up and not connected
24	NC	NC	–	Pulled up and not connected
25	NC	NC	–	Pulled up and not connected
26	NC	NC	–	Pulled up and not connected
27	NC	NC	–	Pulled up and not connected
28	NC	NC	–	Pulled up and not connected
29	NC	NC	–	Pulled up and not connected
30	NC	NC	–	Pulled up and not connected
31	GND	G	–	Ground
32	NC	NC	–	Pulled up and not connected

Lierda 利尔达

Company Address: Lierda Internet of Things Technology Park, No. 1326 Wenyi West Road, Hangzhou

Tel：0571-88800000

33	GND	G	–	Ground
34	NC	NC	–	Pulled up and not connected
35	NC	NC	–	Pulled up and not connected
36	GND	G	–	Ground
37	TXD0	O	–	LOG Serial port，If not needed, Pulled up and not connected
38	RXD0	I	–	LOG Serial port，If not needed, Pulled up and not connected
39	NC	NC	–	Pulled up and not connected
40	NC	NC	–	Pulled up and not connected
41	GND	G	–	Ground
42	NC	NC	–	Pulled up and not connected
43	NC	NC	–	Pulled up and not connected
44	NC	NC	–	Pulled up and not connected

“P”:POWER “I”:INPUT “O”:OUTPUT “G”:GND

Lierda 利尔达

Company Address: Lierda Internet of Things Technology Park, No. 1326 Wenyi West Road, Hangzhou

Tel：0571-88800000

3 Performance Characteristics

3.1 Power Supply Design

3.1.1 Power Interface

The VBAT pin is used to connect an external power supply, and the interface description is shown in the following table:

Table 3-1 Definition of power pins

No.	Pin Name	Description	Min V	Typ V	Max V
9	VDD	Main Power	3.0	3.3	3.6
22	VDDIO	IO Power	2.97	3.3	3.63

The power supply range of the module is 3.0~3.6V, ensuring that the voltage during operation is not lower than 3.0V. The power supply current requirement is not less than 500mA.

3.1.2 Power Supply Design

It is recommended to use 22uF and 0.1uF decoupling capacitors for the power pins of DB37 module. Capacitors should be placed as close as possible to the VDD power supply pin. The required voltage range for power supply is 3.0~3.6V. When using a 3.3V power supply, it is necessary to ensure that the power supply voltage is not lower than 3.0V. The VDD pin is directly connected to the VDD33-PA pin inside the module, which is used to supply power to the Wi Fi PA module circuit. When transmitting at maximum power, VDD33-PA needs to meet the power supply capability of a peak current of 300mA. At the same time, the power ripple is recommended to be within 10mV to avoid excessive ripple causing a decrease in RF performance. The recommended power supply circuit is as follows:

Company Address: Lierda Internet of Things Technology Park, No. 1326 Wenyi West Road, Hangzhou

Tel：0571-88800000

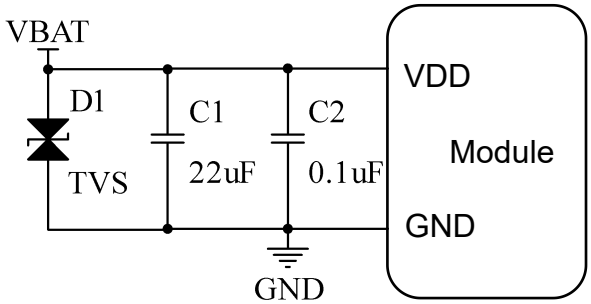

Figure 3.1 Recommended power supply design

Note: For D1 TVS electrostatic protection, it is recommended to place TVS tubes for electrostatic protection

Lierda
利尔达

Company Address: Lierda Internet of Things Technology Park, No. 1326 Wenyi West Road, Hangzhou

Tel：0571-88800000

4 Application Interface

4.1 SDIO Interface

4.1.1 SDIO Interface Description

The SDIO interface is used for WIFI data transmission with the main control, and the interface description is as follows:

Table 4-1 SDIO Definition of Interface Pins

No.	Pin name	Description	Note
14	SDIO_D2	SDIO DATA2	The pin supports 3.3V by default. The PCB design adopts a two-layer board with 50 Ω resistors connected in series; Four layer board, connected in series with a 33Ω resistor.
15	SDIO_D3	SDIO DATA3	
16	SDIO_CMD	SDIO Command/Response	
17	SDIO_CLK	SDIO Clock	
18	SDIO_D0	SDIO DATA0	
19	SDIO_D1	SDIO DATA1	

4.1.2 SDIO Circuit Reference Design

The SDIO interface level follows the VIO pin level and supports 3.3V by default. The reference design for the SDIO interface is as follows:

Company Address: Lierda Internet of Things Technology Park, No. 1326 Wenyi West Road, Hangzhou

Tel：0571-88800000

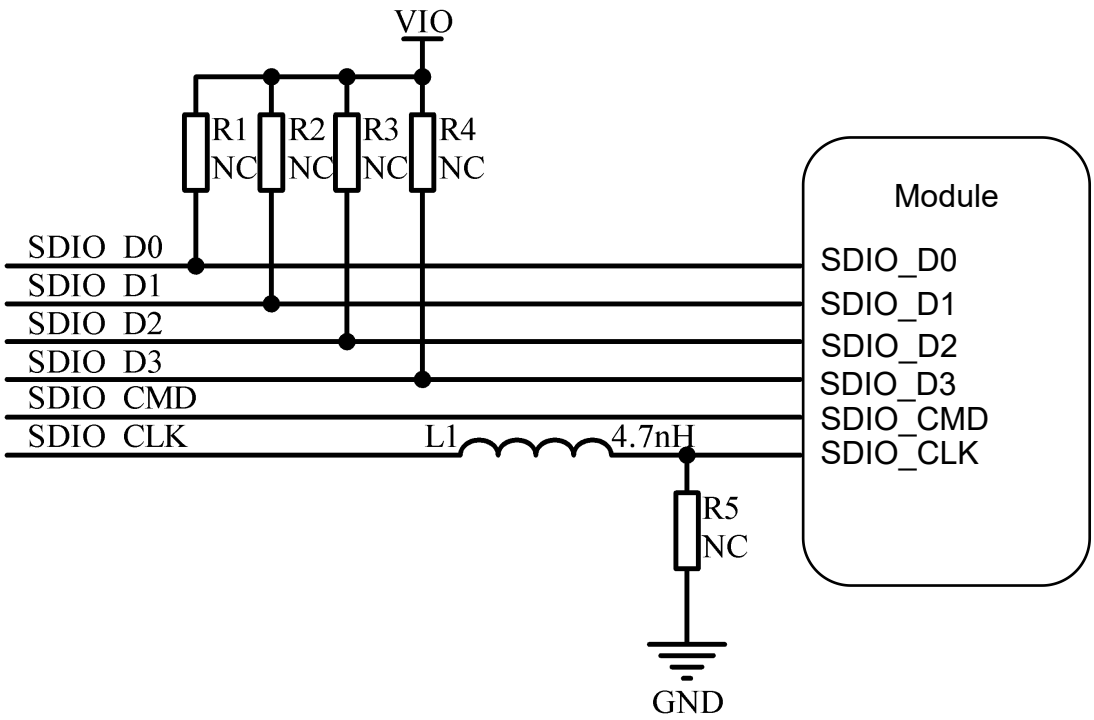

Figure 4.1 SDIO Design

The SDIO interface level is determined by the external power supply voltage of the VDDIO pin, and the connection to the main control terminal needs to maintain the same level as the module terminal. If they are not the same, a level conversion circuit needs to be added between the two.

The recommended interface wiring is as follows:

(1) SDIO supports up to 50MHz, requiring layout and wiring to be kept away from sensitive power, RF, and analog parts, and the length of the wiring should be as short as possible and not exceed 5 inches.

(2) The SDIO wiring spacing strictly follows the principle of 3W, which means that the line width between signals should be kept at three times the line width to avoid crosstalk between signals; SDIO-CLK signal packet ground processing, with the packet ground wire as thick as possible and multiple ground holes drilled on both sides of the wiring.

(3) SDIO.CLK is connected in series with an inductor and a ground resistor near the main control terminal to avoid affecting WIFI reception performance.

SDIO-DATA (0-3) reserves one end of the pull-up resistor to be directly connected to the signal line, and the other end to be connected to VIO. This can reduce signal reflection.

Company Address: Lierda Internet of Things Technology Park, No. 1326 Wenyi West Road, Hangzhou

Tel：0571-88800000

5 RF Characteristics

5.1 Antenna Interface

Table 5-1 Antenna Interface

No.	Pin Name	I/O Type	Description	Note
2	RF	ANT	2.4G Wi-Fi&BT RF Interface	50Ω Characteristis impedance

5.2 Wi-Fi Characteristics

Table 5-2 Wi-Fi Characteristics

Performance	Description	
Wireless standards	IEEE 802.11b/g/n/ax(@2.4GHz),Wi-Fi compliant	
Frequency Range	2.400GHz ~ 2.4835GHz (2.4GHz ISM Band)	
Number of Channels	2.4GHz：Ch1 ~ Ch13	
Modulation	802.11b	DQPSK,DBPSK,CCK
	802.11g/n：OFDM	64-QAM,16-QAM,QPSK,BPSK
	802.11ax：OFDMA	256-QAM,64-QAM, 16-QAM,QPSK,BPSK
Output Power	802.11b/1Mbps	20dBm，typical
	802.11b/11Mbps	20dBm，typical
	802.11g/6Mbps	19dBm，typical
	802.11g/54Mbps	16dBm，typical
	802.11n/MCS0(20/40M)	19dBm，typical
	802.11n/MCS7(20/40M)	15dBm，typical
	802.11ax/MCS0(20M)	19dBm，typical
	802.11ax/MCS9(20M)	14dBm，typical

Company Address: Lierda Internet of Things Technology Park, No. 1326 Wenyi West Road, Hangzhou

Tel：0571-88800000

Freq. Tolerance	±20ppm	
Receive Sensitivity (11b,20MHz) @8% PER	1Mbps	-98dBm，typical
	11Mbps	-89dBm，typical
Receive Sensitivity (11g,20MHz) @10% PER	6Mbps	-95dBm，typical
	54Mbps	-75dBm，typical
Receive Sensitivity (11n,20MHz) @10% PER	MCS=0	-95dBm，typical
	MCS=7	-75dBm，typical
Receive Sensitivity (11n,40MHz) @10% PER	MCS=0	-93dBm，typical
	MCS=7	-73dBm，typical
Receive Sensitivity (11ax,20MHz) @10% PER	MCS=0	-95dBm，typical
	MCS=9	-69dBm，typical

5.3 BLE Performance

Table 5-3 BLE Performance

Performance	Description
Bluetooth Standard	BLE5.2
Frequency Range	2.402GHz ~ 2.480GHz
Channels	LE：Ch0 ~ Ch39
Modulation	GFSK
Output Power	20dBm,Typical

Company Address: Lierda Internet of Things Technology Park, No. 1326 Wenyi West Road, Hangzhou

Tel：0571-88800000

Sensitivity @ PER=30.8% for LE(1Mbps)	-98dBm,Typical
Sensitivity @ PER=30.8% for LE(2Mbps)	-95dBm,Typical
Sensitivity @ PER=30.8% for LE(S2)	-101dBm,Typical
Sensitivity @ PER=30.8% for LE(S5)	-104dBm,Typical
Maximum received signal	0dBm

5.4 Reference Design

When using the DB37 module, a π type matching circuit needs to be reserved between the RF antenna interface of the module and the antenna interface of the base plate. It is recommended to use the antenna matching circuit and initial parameters as shown in the following figure:

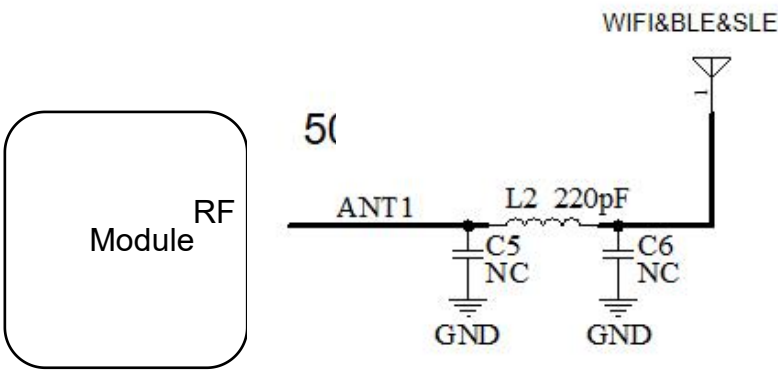

Figure 5.1 Antenna reference design circuit

L2 defaults to using a 220pF capacitor or a 0R resistor, while C5 and C6 default and are

Company Address: Lierda Internet of Things Technology Park, No. 1326 Wenyi West Road, Hangzhou

Tel：0571-88800000

reserved for matching. The final value will be determined based on the actual debugging results.

The wiring from the antenna interface to the base antenna should ensure impedance control of 50 Ω, and the wiring should be as short as possible, without punching holes or sharp angles. Drill more GND vias around the RF wiring. As shown in Figure 5.2:

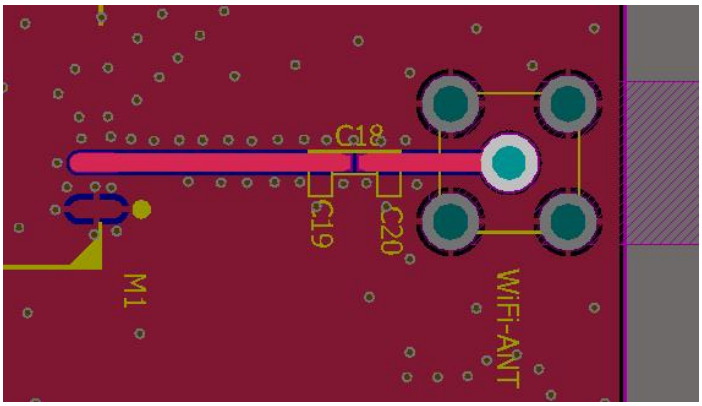

Figure 5.2 Impedance line of the Mother Board

The relationship between plate thickness, line width, and line spacing can be referred to as follows:

Recommended values for FR4 dual panel (H=board thickness, W=line width, D=spacing between wiring and copper plating)

- H=1.0mm，W=0.8mm，D=0.2mm
- H=1.0mm，W=1.0mm，D=0.254mm
- H=1.2mm，W=1.0mm，D=0.2mm
- H=1.6mm，W=1.0mm，D=0.2mm

For π - type matching circuits, to avoid introducing additional parasitic parameters that affect debugging difficulty, it is recommended to place them as shown in the following figure:

Company Address: Lierda Internet of Things Technology Park, No. 1326 Wenyi West Road, Hangzhou

Tel：0571-88800000

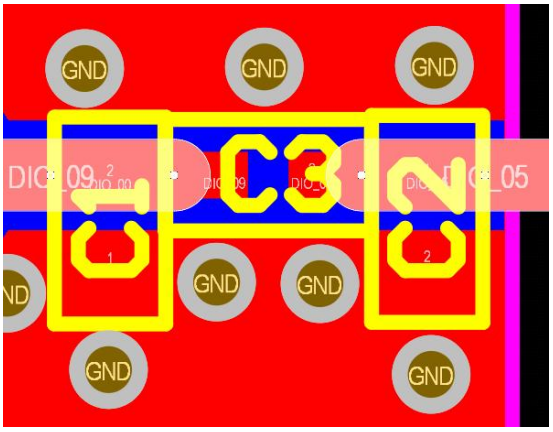

Figure 5.3 Matching circuit CLC placement method

Lierda
利 尔 达

Company Address: Lierda Internet of Things Technology Park, No. 1326 Wenyi West Road, Hangzhou

Tel：0571-88800000

6 Electrical Performance and Reliability

6.1 Value of Power Supply

Table 6-1 Power Supply

Symbol	Description	Min	Typ	MAX	Unit
V_{DD}	Main Power Supply	3.0	3.3	3.6	V
V_{VDDIO}	IO Power Supply	2.97	3.3	3.63	V

6.2 Power Consumption

Table 6-2 Module RF Power Consumption Description

Description	Condition	Current (mA), Typical
Wi-Fi	802.11b,11Mbps@20dBm	340
	802.11n,HT20,MCS7@15dBm	260
	802.11ax,HE20,MCS9@14dBm	250
BLE	BLE ,1M@20dBm	330

6.3 Performance Temperature

Table 6-3 Performance Temperature

Symbol	Description	Min	Typ	Max	Unit
T_A	Performance Temperature	-40	/	+85	℃

Company Address: Lierda Internet of Things Technology Park, No. 1326 Wenyi West Road, Hangzhou

Tel：0571-88800000

7 Reference Design

7.1 points for attention

The safety distance that needs to be controlled for devices with 0402 and below on the outermost mechanical layer of module packaging. If there are components with 0402 and below packaging on the substrate, they need to be placed outside the outer mechanical layer to avoid interference during product placement, which may cause product abnormalities.

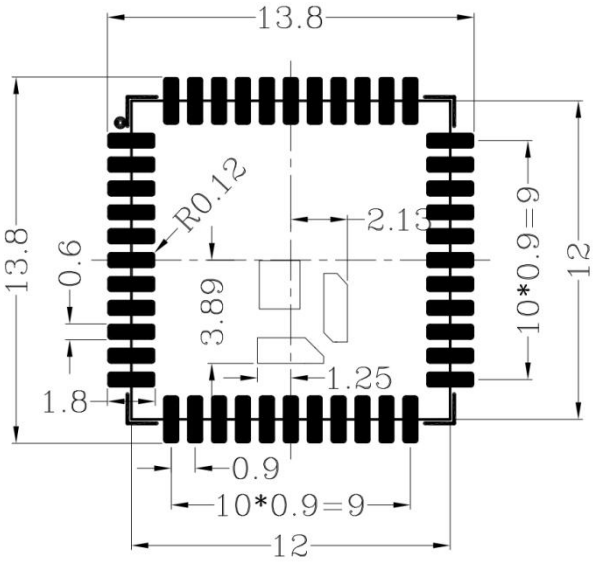

Figure 7.1 Module recommended footprint

Company Address: Lierda Internet of Things Technology Park, No. 1326 Wenyi West Road, Hangzhou

Tel：0571-88800000

8 Mechanical dimensions

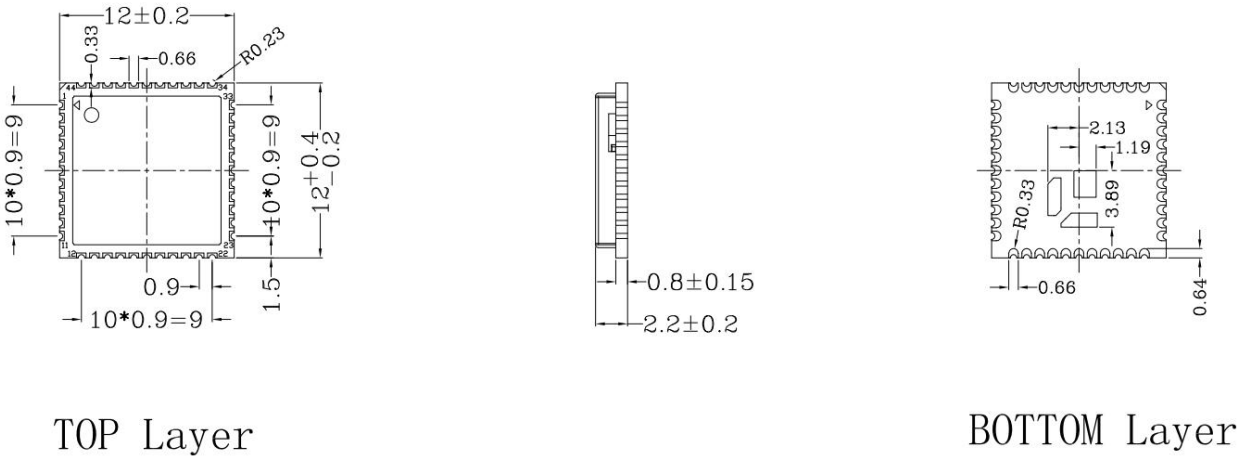

Figure 8.1 Dimension of module

Lierda
利 尔 达

Company Address: Lierda Internet of Things Technology Park, No. 1326 Wenyi West Road, Hangzhou

Tel：0571-88800000

9 Production and Packaging Information

9.1 Production Welding

9.1.1 Production Instructions

It is recommended to use SMT machine to mount the stamp mouth packaging module, and the mounting should be completed within 24 hours after unpacking, otherwise, it should be vacuum-packed again to avoid moisture and poor mounting.

If the package contains a humidity indicator card, it is recommended to judge whether the module needs to be baked according to the humidity card. The conditions for baking are as follows:

Baking temperature: 125℃±5℃;

The alarm temperature is set to 130°C;

After cooling <36°C under natural conditions, SMT patching can be carried out;

If the unpacking time exceeds 3 months, you need to pay special attention to whether the product is damp. Because of the PCB immersion gold process, more than 3 months may cause oxidation of the pads, which may cause problems such as virtual soldering and missing soldering during placement.

In order to ensure the qualified rate of reflow soldering, it is recommended to select 10% of the products for visual inspection and AOI inspection for the first placement, so as to ensure the rationality of furnace temperature control, device adsorption method and placement method.

Operators at each station must wear electrostatic gloves during the whole production process.

9.1.2 Module location requirements on the backplane

It is recommended that the thickness of the green oil at the position of the module on the

Company Address: Lierda Internet of Things Technology Park, No. 1326 Wenyi West Road, Hangzhou

Tel：0571-88800000

bottom plate be less than 0.02mm to avoid excessive thickness, and the raised module cannot effectively contact the solder paste and affect the soldering quality. In addition, it is necessary to consider that other devices cannot be placed within 2mm around the interface board module to ensure the maintenance of the module.

9.1.3 Stencil Opening Design

In principle, the thickness of the stencil on the bottom plate is selected based on the comprehensive consideration of the package type of the device on the board. The following requirements need to be focused on:

The pad position of the module can be partially thickened to 0.15~0.20mm to avoid empty soldering.

9.1.4 Production Notes

- During the production process, each operator must wear electrostatic gloves;
- Do not exceed the specified baking time when baking;
- It is strictly forbidden to add explosive, flammable and corrosive substances during baking;
- When baking, the modules should be placed in a high-temperature tray to keep the air circulation between the modules;
- When baking, the oven door must be closed to ensure that the oven is closed to prevent temperature leakage;
- Try not to open the door when the oven is running. If it must be opened, try to shorten the time for opening the door;
- After baking, wait for the module to cool naturally below 36°C before taking it out with electrostatic gloves to avoid burns;
- During operation, strictly prevent the bottom surface of the module from getting water or dirt;

Company Address: Lierda Internet of Things Technology Park, No. 1326 Wenyi West Road, Hangzhou

Tel：0571-88800000

9.1.5 Recommended Reflow Profile

Note: This work guide is only suitable for lead-free work and is for reference only.

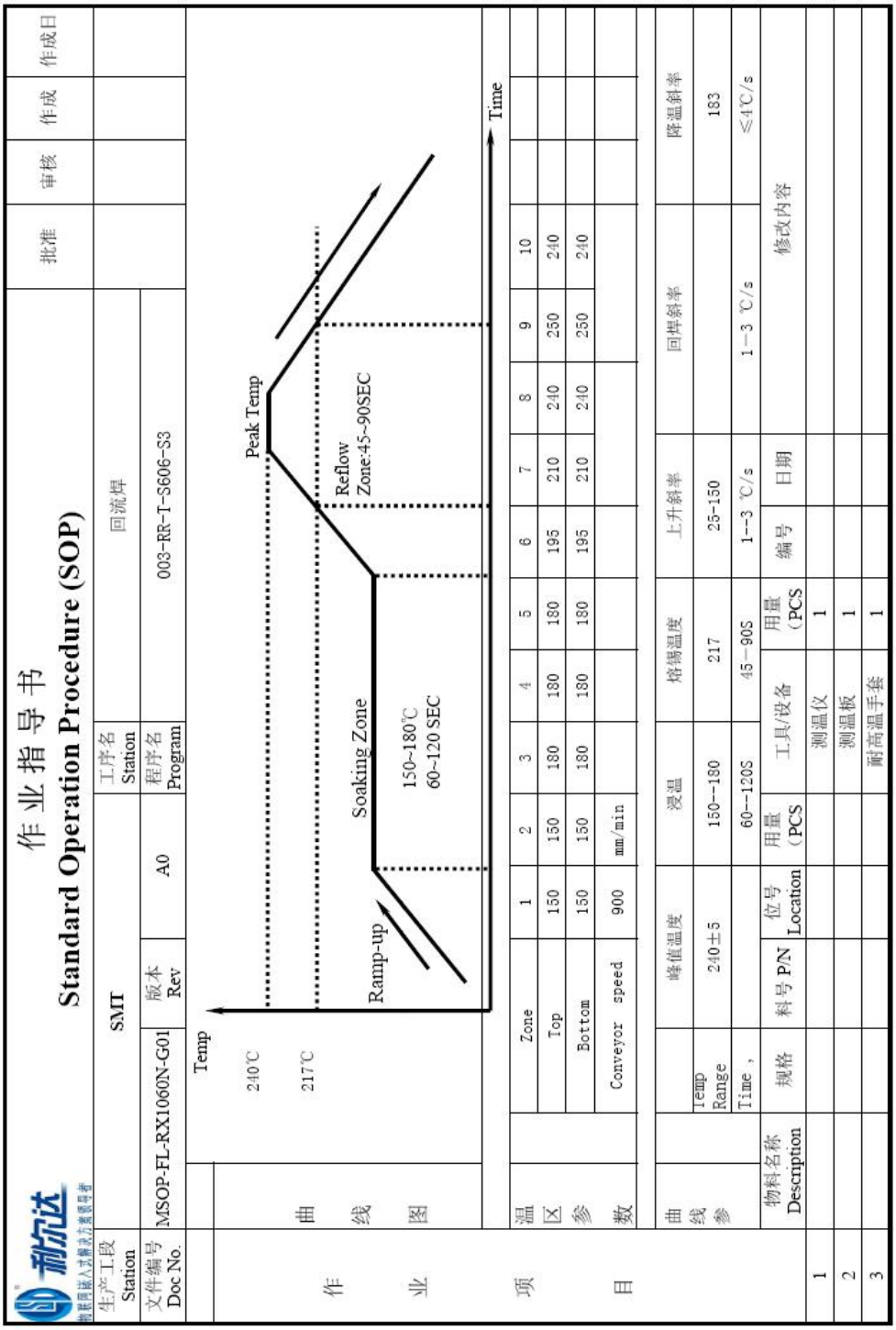

Figure 9.1 Reflow Soldering Operation Instructions

Company Address: Lierda Internet of Things Technology Park, No. 1326 Wenyi West Road, Hangzhou

Tel：0571-88800000

9.2 Package Information

9.2.1 Packaging Method

Model Name	Packing Method	Packing Case (pcs)	MPQ(pcs)	Reels per Case
L-NLEDB37-G5NN4	Tape and Reel	6500	1300	5

9.2.2 Carrier Size Detail

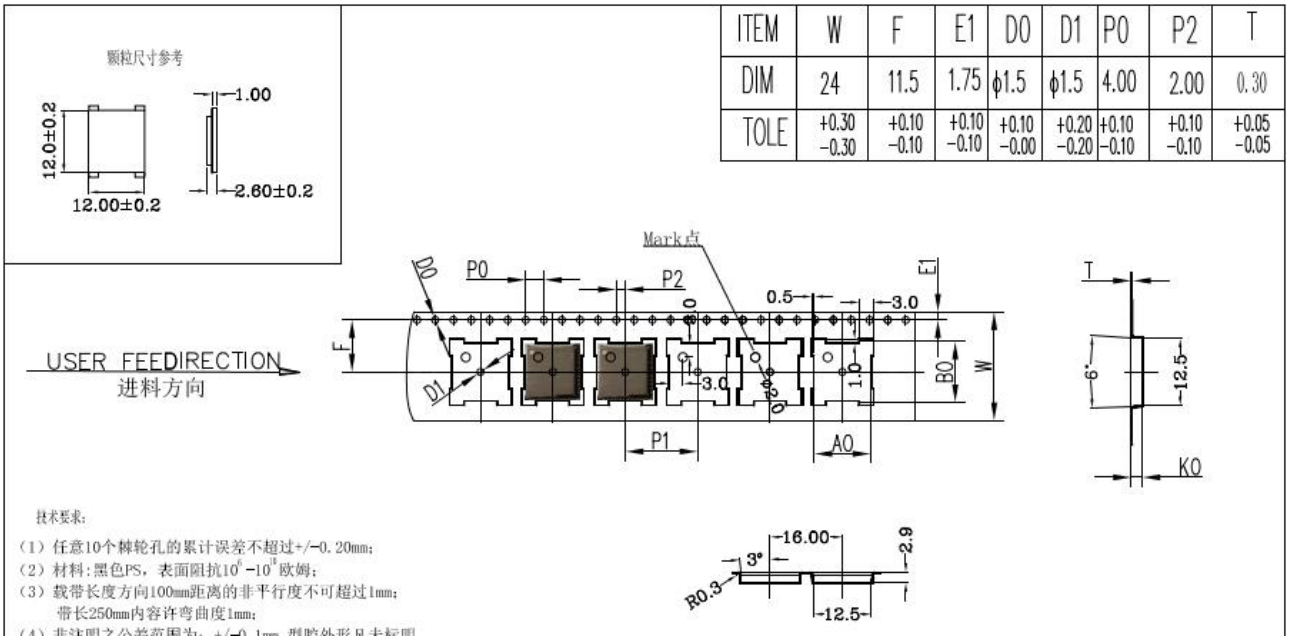

Figure 9.2 Carrier size and product orientation

Company Address: Lierda Internet of Things Technology Park, No. 1326 Wenyi West Road, Hangzhou

Tel：0571-88800000

FCC MODULAR APPROVAL INFORMATION EXAMPLES for Manual

This device complies with Part 15 of the FCC Rules. Operation is subject to the following two conditions:

(1) This device may not cause harmful interference.

(2) This device must accept any interference received, including interference that may cause undesired operation.

CAUTION: Changes or modifications not expressly approved by the party responsible for compliance could void the user's authority to operate the equipment.

FCC Radiation Exposure Statement:

This equipment complies with FCC radiation exposure limits set forth for an uncontrolled environment. This equipment should be installed and operated with minimum distance 20cm between the radiator & your body.

OEM INTEGRATION INSTRUCTIONS:

This device is intended only for OEM integrators under the following conditions:

The module must be installed in the host equipment such that 20 cm is maintained between the antenna and users, and the transmitter module may not be co-located with any other transmitter or antenna. The module shall be only used with the internal on-board antenna that has been originally tested and certified with this module. External antennas are not supported. As long as these 3 conditions above are met, further transmitter test will not be required.

However, the OEM integrator is still responsible for testing their end-product for any additional compliance requirements required with this module installed (for example, digital device emissions, PC peripheral requirements, etc.). The end-product may need Verification testing, Declaration of Conformity testing, a Permissive Class II Change or new Certification. Please involve a FCC certification specialist in order to determine what will be exactly applicable for the end-product.

Validity of using the module certification:

In the event that these conditions cannot be met (for example certain laptop configurations or co-location with another transmitter), then the FCC authorization for this module in combination with the host equipment is no longer considered valid and the FCC ID of the module cannot be used on the final product. In these circumstances, the OEM integrator will be responsible for re-evaluating the end product (including the transmitter) and obtaining a separate FCC authorization. In such cases, please involve a FCC certification specialist in order to determine if a Permissive Class II Change or new Certification is required.

Upgrade Firmware:

The software provided for firmware upgrade will not be capable to affect any RF parameters as certified for the FCC for this module, in order to prevent compliance issues.

End product labeling:

This transmitter module is authorized only for use in device where the antenna may be installed such that 20 cm may be maintained between the antenna and users. The final end product must be labeled in a visible area with the following: “Contains FCC ID:2AOFDL-NLEDB37”.

Information that must be placed in the end user manual:

The OEM integrator has to be aware not to provide information to the end user regarding how to install or remove this RF module in the user's manual of the end product which integrates this module. The end user manual shall include all required regulatory information/warning as show in this manual.

Requirement per KDB996369 D03

2.2 List of applicable FCC rules

List the FCC rules that are applicable to the modular transmitter. These are the rules that specifically establish the bands of operation, the power, spurious emissions, and operating fundamental frequencies. DO NOT list compliance to unintentional-radiator rules (Part 15 Subpart B) since that is not a condition of a module grant that is extended to a host manufacturer. See also Section 2.10 below concerning the need to notify host manufacturers that further testing is required.3

Explanation: This module meets the requirements of FCC part 15C(15.247). part 15E(15.407)

2.3 Summarize the specific operational use conditions

Describe use conditions that are applicable to the modular transmitter, including for example any limits on antennas, etc. For example, if point-to-point antennas are used that require reduction in power or compensation for cable loss, then this information must be in the instructions. If the use condition limitations extend to professional users, then instructions must state that this information also extends to the host manufacturer' s instruction manual. In addition, certain information may also be needed, such as peak gain per frequency band and minimum gain, specifically for master devices in
5 GHz DFS bands.

Explanation: The EUT has a Dipole Antenna, and the antenna use a permanently attached antenna which is not replaceable.

2.4 Limited module procedures

If a modular transmitter is approved as a "limited module," then the module manufacturer is responsible for approving the host environment that the limited module is used with. The manufacturer of a limited module must describe, both in the filing and in the installation instructions, the alternative means that the limited module manufacturer uses to verify that the host meets the necessary requirements to satisfy the module limiting conditions.

A limited module manufacturer has the flexibility to define its alternative method to address the conditions that limit the initial approval, such as: shielding, minimum signaling amplitude, buffered modulation/data inputs, or power supply regulation. The alternative method could include that the limited module manufacturer reviews detailed test data or host designs prior to giving the host manufacturer approval.

This limited module procedure is also applicable for RF exposure evaluation when it is necessary to demonstrate compliance in a specific host. The module manufacturer must state how control of the product into which the modular transmitter will be installed will be maintained such that full compliance of the product is always ensured. For additional hosts other than the specific host originally granted with a limited module, a Class II permissive change is required on the module grant to register the additional host as a specific host also approved with the module.

Explanation: The module is not a limited module.

2.5 Trace antenna designs

For a modular transmitter with trace antenna designs, see the guidance in Question 11 of KDB Publication 996369 D02 FAQ – Modules for Micro-Strip Antennas and traces. The integration information shall include for the TCB review the integration instructions for the following aspects: layout of trace design, parts list (BOM), antenna, connectors, and isolation

requirements.

a) Information that includes permitted variances (e.g., trace boundary limits, thickness, length, width, shape(s), dielectric constant, and impedance as applicable for each type of antenna);

b) Each design shall be considered a different type (e.g., antenna length in multiple(s) of frequency, the wavelength, and antenna shape (traces in phase) can affect antenna gain and must be considered);

c) The parameters shall be provided in a manner permitting host manufacturers to design the printed circuit (PC) board layout;

d) Appropriate parts by manufacturer and specifications;

e) Test procedures for design verification; and

f) Production test procedures for ensuring compliance.

The module grantee shall provide a notice that any deviation(s) from the defined parameters of the antenna trace, as described by the instructions, require that the host product manufacturer must notify the module grantee that they wish to change the antenna trace design. In this case, a Class II permissive change application is required to be filed by the grantee, or the host manufacturer can take responsibility through the change in FCC ID (new application) procedure followed by a Class II permissive change application.

Explanation: Yes, The module with trace antenna designs, and This manual has been shown the layout of trace design, antenna, connectors, and isolation requirements.

2.6 RF exposure considerations

It is essential for module grantees to clearly and explicitly state the RF exposure conditions that permit a host product manufacturer to use the module. Two types of instructions are required for RF exposure information: (1) to the host product manufacturer, to define the application conditions (mobile, portable – xx cm from a person's body); and (2) additional text needed for the host product manufacturer to provide to end users in their end-product manuals. If RF exposure statements and use conditions are not provided, then the host product manufacturer is required to take responsibility of the module through a change in FCC ID (new application).

Explanation: This module complies with FCC RF radiation exposure limits set forth for an uncontrolled environment, This equipment should be installed and operated with a minimum distance of 20 centimeters between the radiator and your body."

This module is designed to comply with the FCC statement, FCC ID is: 2AOFDL-NLEDB37.

2.7 Antennas

A list of antennas included in the application for certification must be provided in the instructions. For modular transmitters approved as limited modules, all applicable professional installer instructions must be included as part of the information to the host product manufacturer. The antenna list shall also identify the antenna types (monopole, PIFA, dipole, etc. (note that for example an “omni-directional antenna” is not considered to be a specific “antenna type”)).

For situations where the host product manufacturer is responsible for an external connector, for example with an RF pin and antenna trace design, the integration instructions shall inform the installer that unique antenna connector must be used on the Part 15 authorized transmitters used in the host product. The module manufacturers shall provide a list of acceptable unique connectors.

Explanation: The EUT has a Dipole Antenna, and the antenna use a permanently attached antenna which is unique.

ANTENNA IFOMATION：

Frequency range	Manufacturer	Model	Peak gain	Antenna type
2400-2483.5MHz	DONGGUAN SLEing INTEL-TECH	RG-178	2.46dBi	Dipole antenna

2.8 Label and compliance information

Grantees are responsible for the continued compliance of their modules to the FCC rules. This includes advising host product manufacturers that they need to provide a physical or e-label stating “Contains FCC ID” with their finished product. See

Guidelines for Labeling and User Information for RF Devices－ KDB Publication 784748.

Explanation: The host system using this module, should have label in a visible area indicated the following texts: “Contains FCC ID: 2AOFDL-NLEDB37”

2.9 Information on test modes and additional testing requirements%

Additional guidance for testing host products is given in KDB Publication 996369 D04 Module Integration Guide. Test modes should take into consideration different operational conditions for a stand-alone modular transmitter in a host, as well as for multiple simultaneously transmitting modules or other transmitters in a host product.

The grantee should provide information on how to configure test modes for host product evaluation for different operational conditions for a stand-alone modular transmitter in a host, versus with multiple, simultaneously transmitting modules or other transmitters in a host.

Grantees can increase the utility of their modular transmitters by providing special means, modes, or instructions that simulates or characterizes a connection by enabling a transmitter. This can greatly simplify a host manufacturer’s determination that a module as installed in a host complies with FCC requirements. **Explanation:** Top band can increase the utility of our modular transmitters by providing instructions that simulates or characterizes a connection by enabling a transmitter.

2.10 Additional testing, Part 15 Subpart B disclaimer

The grantee should include a statement that the modular transmitter is only FCC authorized for the specific rule parts (i.e., FCC transmitter rules) listed on the grant, and that the host product manufacturer is responsible for compliance to any other FCC rules that apply to the host not covered by the modular transmitter grant of certification. If the grantee markets their product as being Part 15 Subpart B compliant (when it also contains unintentional-radiator digital circuity), then the grantee shall provide a notice stating that the final host product still requires Part 15 Subpart B compliance testing with the modular transmitter installed.

Explanation: The module without unintentional-radiator digital circuity, so the module does not require an evaluation by FCC Part 15 Subpart B. The host shoule be evaluated by the FCC Subpart B.