QB20 Series LoRa Module

-Cost-effective
-Small-size
-SPI-Interface

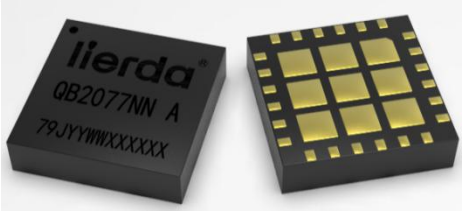

QB20 Serial LoRa SIP Module integrates SX1262 RF transceiver and RF front-end circuit inside. Only an external 32MHz TCXO or passive crystal is required when using it. This module supports LoRa and FSK modulation. The maximum transmit power of the module is up to +22dBm, and the receiving sensitivity can reach -148 dBm. Its unique modulation method makes its anti-interference ability strong. The module package is LGA24, and the size is 8.0mm x 8.0mm x 2.0mm.

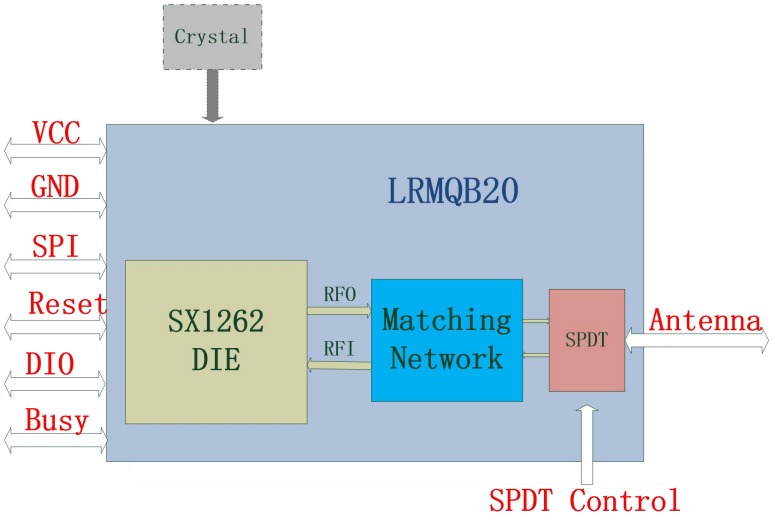

Features

·Working Band
- 470~510MHz(L-LRMQB20-77NN4)
- 860~930MHz(L-LRMQB20-97NN4)

·Multiple modulation methods
- LoRa, GFSK, FSK

·Ultra low power consumption
- Supply Voltage 1.8V to 3.7V. (When the transmit power is +22dBm, the voltage cannot be lower than 3.1V)
- Emission current ≤135mA (max +22dBm)
- Receiving current ≤ 6mA (DC-DC mode, internal current)
- 600uA standby current
- 600nA sleep current

·High link budget
- Sensitivity -148±1dBm (SF=12,BW_L=10.4KHz)
- Transmit power Max. +22 dBm

·Ultra small size
- 8.0mm*8.0mm*2.0mm

·Ultra long transmission range
- 6Km(@SF=12,BW=125KHz, urban environment, LoRa modulation, Max.22dBm transmit)

·High privacy
- Using a unique LoRa modulation method, the signal is difficult to capture and analyze.

·Communication Interface
- SPI interface， easy to connect

Applications

- Smart home
- Security Monitoring
- Low-power sensors
- Remote control
- Logistics and warehousing
- Industrial control
- Long-Range transmission

Foreword

Lierda Technology Group Co., Ltd. provides the content of this document to support the product design of its customers. Customers must design their products in accordance with the specifications and parameters provided in the document. The company does not assume any responsibility for personal injury or property damage caused by improper operation of the customer. Before making a statement, Lierda has the right to update the document.

Copyright statement

The copyright of this document belongs to Lierda Co., Ltd. Anyone who reproduces or reprints this document without the permission of our company shall bear legal responsibility.

Copyright © Lierda Science & Technology Group Co.,Ltd

Document Revision History

Version	Revision Date	Revision Description
Beta	2021-11-12	Initial version
Beta	2022-01-18	Reference Design， External 32MHz TCXO Schematic diagram modification

1 Specifications

Table 1-1 Limit Characteristics

Features	Value		Remarks
	Minimum	Maximum	
Input Voltage(V)	-0.5	+3.9	
Maximum RF input power (dBm)	-	+10	
Operating temperature (℃)	-40	+85	

Table 1-2 Working Characteristics[1]

Features	Value			Remarks
	Min	Typ	Max	
Operating Voltage(V)	1.8	3.3	3.7	
Operating temperature(℃)	-40	-	85	
Operating Band (MHz)	L-LRMQB20-77NN4			
	433	-	510	Working frequency can be customized[2]
	L-LRMQB20-97NN4			
	860		930	Working frequency can be customized[2]
TX Current(mA)	L-LRMQB20-77NN4			
	70	80	90	DC-DC Mode，17dBm TX[3]
	90	107	125	DC-DC Mode，22dBm TX[4]
	L-LRMQB20-97NN4			
	40	50	60	DC-DC Mode，14dBm TX[4]
	100	120	135	DC-DC Mode，22dBm TX[5]
RX Current(mA)	L-LRMQB20-77NN4、L-LRMQB20-97NN4			
	-	5.0	6	DC-DC Mode，Internal Current
Sleep Current(uA)	-	0.6	2	Register value will be saved
Output Power(dBm)	L-LRMQB20-77NN4、L-LRMQB20-97NN4			
	-	22	-	22dBm TX；Programmable [5]
RX sensitivity(dBm)	-	-124	-	BW_L=125KHz,SF=7

[1] The test conditions are: temperature: 25℃, center frequency: 490MHz, working voltage: 3.3V.
[2] Please configure according to the operating frequency band permitted by local regulations. Please be sure to comply with local regulations for use. If it is used in a frequency band that is not permitted by regulations, our company will not bear any responsibility.
[3] The output power must be set according to the optimization recommendation. If the setting does not match the recommended value, the power and power consumption may not be optimal, and the module may even be damaged. The configuration is shown in Table 2-2.
[4] The output power must be set according to the optimization recommendation. If the setting does not match the recommended value, the power and power consumption may not be optimal, and the module may even be damaged. The configuration is shown in Table 2-3.

Datarate	LoRa(bps)	-	-	62.5K	Programmable
	FSK(bps)	-	-	300K[5]	Programmable
Modulation		LoRa/GFSK/FSK			Programmable
Packaging		LGA24			1.0mm Spacing
Interface		SPI			-
Dimensions (mm)		8.0*8.0*2.0mm (See Figure 2-1 for details)			-

2 Tx Power Configuration

It is necessary to configure the transmit power strictly in accordance with the table, otherwise the product may suffer from poor power consumption, performance degradation or even damage.

The power configuration registers are shown in Table 2-1. When using, you can change the SetTxParams parameter value to change the actual output power. The setting range of SetTxParams is -3~22. When configured to 22, the actual output power can reach maximum+22dBm. Note that the values of the four registers PaDutyCycle, HpMax, DeviceSel, PaLut cannot be changed, otherwise performance degradation or even module damage may occur.

Table 2-1 PA operation mode setting [6]

Actual output power (dBm)	PaDutyCycle	HpMax	DeviceSel	PaLut	Value in SetTxParams
22	0x04	0x07	0x00	0x01	22
17	0x04	0x07	0x00	0x01	17

Reference codes are as follows:

```
Void SX126xSetTxParams( int8_t power, RadioRampTimes_t rampTime )
{
     uint8_t buf[2];
     if( power > 22 )
        {
           power = 22;
        }
        else if( power < -3 )
        {
           power = -3;
        }
    SX126xSetPaConfig( 0x04, 0x07, 0x00, 0x01 );
    SX126xWriteRegister( REG_OCP, 0x38 ); // current max 140mA for the whole device
    buf[0] = power;
    buf[1] = ( uint8_t )rampTime;
    SX126xWriteCommand( RADIO_SET_TXPARAMS, buf, 2 );
}
```

[5] The maximum rate is proportional to the radio frequency; for example, the 868/915MHz frequency band is 300kbps, and the 433MHz frequency band is 150kbps;

[6] Change the actual output power by changing SetTxParams, the maximum is 22; note that the four register values of PaDutyCycle, HpMax, DeviceSel, PaLut cannot be changed, otherwise performance degradation or module damage will occur;

3 Module Dimensions

3.1 Dimensions

symbol	Dimension in mm		
	MIN	NOM	MAX
A	1.850	2.000	2.150
A2	1.150	1.200	1.250
c	0.700	0.800	0.900
D	7.900	8.000	8.100
E	7.900	8.000	8.100
D1	---	5.000	---
E1	---	5.000	---
e	---	1.000	---
ax(24)	0.400	0.450	0.500
bx(24)	0.550	0.600	0.650
L	5.300	5.400	5.500
L1	1.500	1.600	1.700
aaa	0.100		
N	24		
MD/ME	6/6		

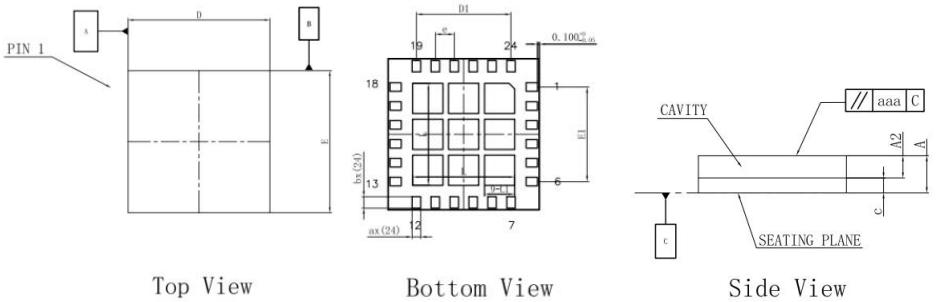

Figure 3-1 QB20 series module size diagram

3.2 Pin Definition

Table 3-1 Pin definition

PIN	Name	Description
P1	GND	Power-GND
P2	GND	Power-GND
P3	GND	Power-GND
P4	XTA	Crystal oscillator connection, external reference clock input
P5	XTB	Crystal oscillator connection
P6	DIO3	Interrupt source mapping pin, or TCXO control
P7	VDD	Power-VDD
P8	VDD	Power-VDD
P9	GND	Power-GND
P10	GND	Power-GND
P11	DIO1	Interrupt source mapping pin
P12	BUSY	Busy indicator
P13	NREST	Reset pin, low active
P14	MISO	SPI data output
P15	MOSI	SPI data input
P16	SCK	SPI clock input
P17	NSS	SPI enable

P18	CTRL	RF switch control pin; TX:0; RX:1; Sleep:0 (At the same time, you need to enable DIO2 control, SetDIO2AsRfSwitchCtrl)
P19	ANT	RF output port
P20	GND	Power-GND
P21	GND	Power-GND
P22	GND	Power-GND
P23	GND	Power-GND
P24	GND	Power-GND

4 Usage

4.1 Reference Design

4.1.1 External 32MHz passive crystal

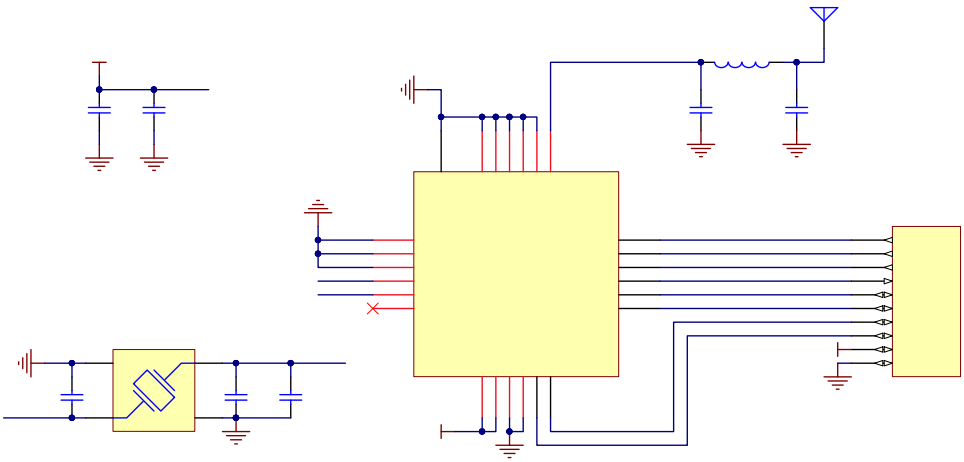

Figure 4-1 Reference design of external 32MHz passive crystal

Tag	Name	Part number	Parameter Description	Factory	packaging	Remark
C1	Tantalum capacitor	T491B107K010AT	100uF/10V/10%	KEMET	Type B	
C2	Ceramic capacitor	GRM188R71C104KA01D	0.1uF/16V/10%/X7R	MURATA	0603	
X1	Passive crystal	XRCGB32M000F1H12R0	12pF/32MHz/10PPM/-40°~85°	MURATA	2016	
C4	Ceramic capacitor	GRM1555C1H8R2CA01#	8.2pF/50V/0.25pF/C0G	MURATA	0402	
C5	Ceramic capacitor	GRM1555C1H6R8BA01D	6.8pF/50V/0.1pF/C0G	MURATA	0402	
R1	Standard resistance	/	0R	/	0402	

Table 4-1 Reference BOM

4.1.2 External 32MHz TCXO

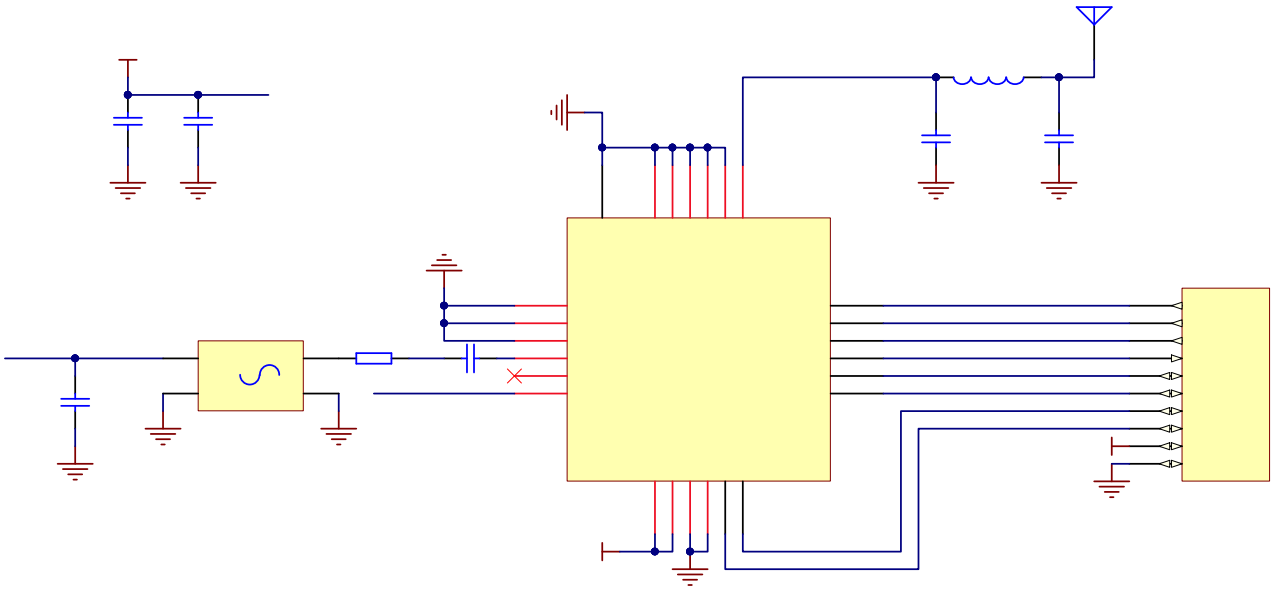

Figure 4-2 Reference design of External 32MHz TCXO

Tag	Name	Part number	Parameter Description	Factory	packaging	Remark
C1	Tantalum capacitor	T491B107K010AT	100uF/10V/10%	KEMET	Type B	
C2	Ceramic capacitor	GRM188R71C104KA01D	0.1uF/16V/10%/X7R	MURATA	0603	
X1	TCXO	X1G0054410305##	10pF/32MHz/0.5PPM/2.66-3.465V/-40°~85°	EPSON	2016	
C3	Ceramic capacitor	GRM155R71C104KA88*#	0.1uF/16V/10%/X7R	MURAT	0402	
C4	Ceramic capacitor	GRM1555C1H100JA01D	10pF/50V/5%/C0G	MURAT	0402	
R2	Standard resistance	/	220R	/	0402	
R1	Standard resistance	/	0R	/	0402	

Table 4-2 Reference BOM

4.1.2 Layout Attentions

- Try to connect the DIO port to the MCU IO port with external interrupt.
- The traces between the RF output of the module and the antenna pad should be as short as possible. A 50Ω impedance line should be used, and the ground should be covered. More holes should be punched around the trace.
- If allowed, add a π circuit from the RF output of the module to the antenna pad.
- Clearance is required around the antenna, leaving at least a 5mm clearance area.
- Pay attention to grounding, it is best to ensure a large area of ground.
- Keep the module away from high-voltage circuits and high-frequency switching circuits.
- Refer to the application document "RF PCB LAYOUT Design Rules (Applicable to Sub-1GHZ and Bluetooth Module)" for layout and wiring;。

4.2 Software operation

This module is an SPI slave device, and it can communicate with it using the SPI interface of the MCU, and operate its registers and receiving and sending buffers through API commands to complete the wireless data receiving and sending function. For the SPI operation function, the user needs to modify it according to the way his MCU operates the SPI. Please refer to the latest SX1262 data manual for the read and write operation timing of the module register;

Before software development, users can refer to the demo LoRa communication routines provided by our company and the LoRa point-to-point communication in the sample code instruction manual. When porting the code, users mainly need to adjust the SPI according to their own MCU, and then refer to the communication routines.

The point-to-point communication process using a pair of LoRa modules is shown in Figure 4-3. In this communication process example, the transmitter can send data to the receiver through LoRa, and the receiver will return the data packet through LoRa after receiving the data packet. The transmitting end. Communicate cyclically.

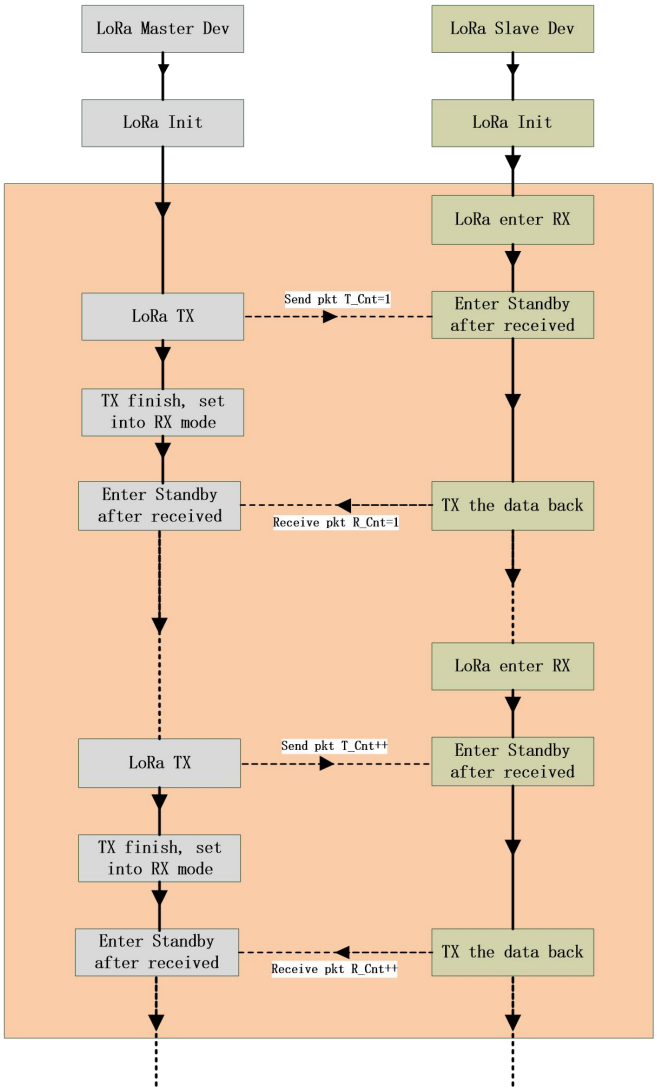

Figure 4-3 Point-to-point communication flow chart

5 Prohibited Frequency

Prohibited Frequencies are the frequencies where the module performs extremely poor, and it is strictly forbidden to use it. The non-recommended frequencies are the frequencies where the module performs poor, and the customer can use it as appropriate.

It is recommended that the frequency used in the application is at least 1MHz away from the forbidden frequencies.

Prohibited Frequencies: 446MHz, 448MHz, 464MHz, 480MHz, 496MHz.

Non-recommended frequencies: 440MHz, 452MHz, 456MHz, 494MHz.

6 FAQ

6.1 Modules can't communicate even in short distance

- Confirm whether the configuration on the sending and receiving sides are inconsistent. If the two sides are configured differently, communication is not possible.
- Abnormal voltage, too low voltage will cause abnormal sending.
- Check the battery. The voltage of a low-power battery will be pulled down during transmission, causing abnormal transmission.
- The antenna welding is abnormal, the RF signal does not reach the antenna or the π circuit is welded incorrectly.

6.2 Abnormal power consumption

- abnormal power consumption.
- In low-power reception, the timing configuration, etc. is incorrect, resulting in the power consumption not reaching the expected effect.
- If it is normal to test the module or the MCU alone, the power consumption is abnormal in the joint debugging, which is generally due to the configuration of the MCU pin connected to the radio frequency module.
- The power consumption of the module will fluctuate in extreme environments such as high temperature, high humidity, and low temperature.

6.3 Short communication distance

- The impedance matching of the antenna is not done well, resulting in very small transmitted power.
- Metal and other objects around the antenna cause signal loss.
- There are other interference signals in the test environment that cause the communication distance of the

module to be short.

- Insufficient power supply causes abnormal transmit power of the module.
- The test environment is harsh and the signal loss is great.
- There are a large number of walls in the transmission path where the signal cannot be diffracted, resulting in a large signal loss.
- The module is too close to the ground. The signal is absorbed and reflected, resulting in poor communication.

7 Production Guidance

7.1 Stencil Design

The thickness of the stencil should be selected according to the package type of the device in the board, and the following requirements should be paid attention to:

The module pad position can be locally thickened to 0.15~0.20mm to avoid empty soldering;

7.2 Reflow Profile

Note: This work instruction is only suitable for lead-free work and is for reference

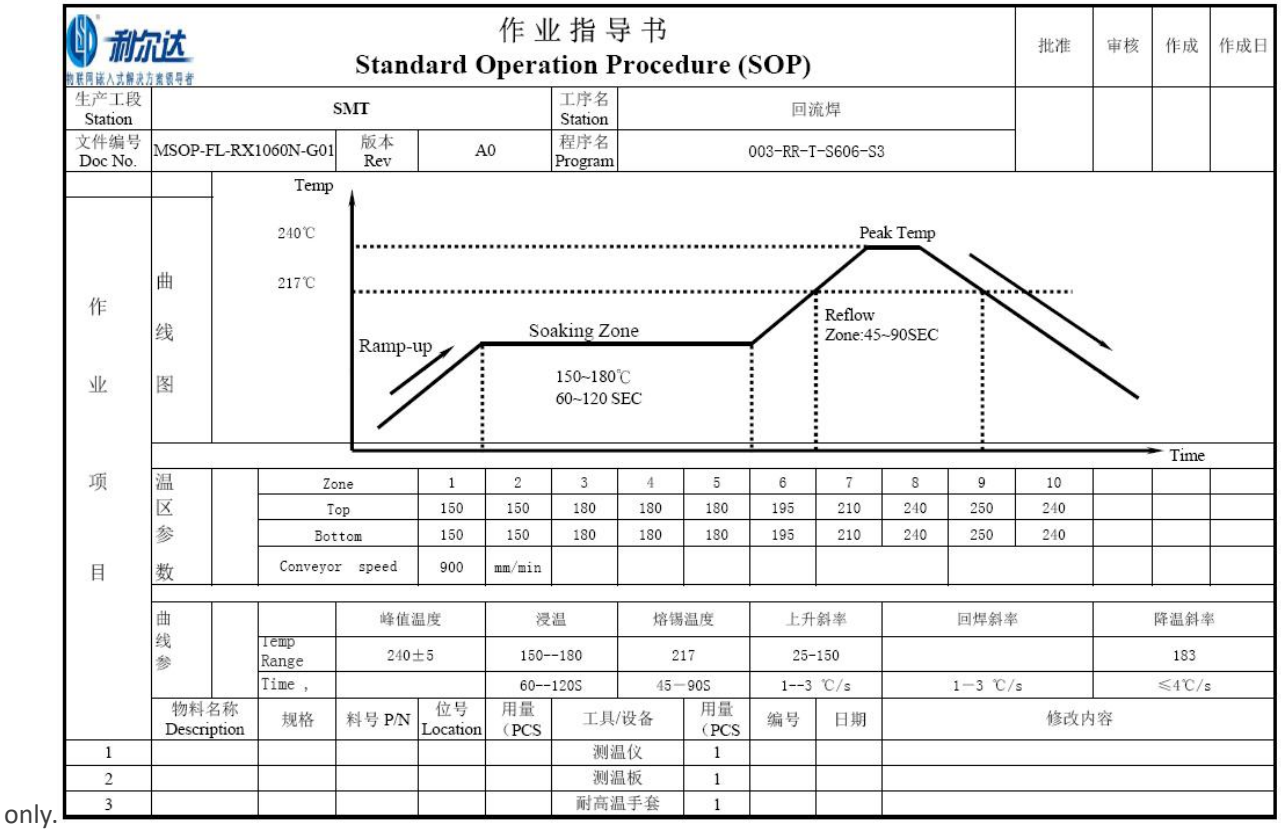

利尔达 物联网嵌入式解决方案领导者	作业指导书 Standard Operation Procedure (SOP)					批准	审核	作成	作成日
生产工段 Station	SMT			工序名 Station	回流焊				
文件编号 Doc No.	MSOP-FL-RX1060N-G01	版本 Rev	A0	程序名 Program	003-RR-T-S606-S3				

温区参数	Zone	1	2	3	4	5	6	7	8	9	10
	Top	150	150	180	180	180	195	210	240	250	240
	Bottom	150	150	180	180	180	195	210	240	250	240
	Conveyor speed	900	mm/min								

曲线参		峰值温度	浸温	熔锡温度	上升斜率	回焊斜率	降温斜率
	Temp Range	240±5	150--180	217	25-150		183
	Time ,		60--120S	45－90S	1--3 ℃/s	1－3 ℃/s	≤4℃/s

	物料名称 Description	规格	料号 P/N	位号 Location	用量 (PCS	工具/设备	用量 (PCS	编号	日期	修改内容
1						测温仪	1			
2						测温板	1			
3						耐高温手套	1			

only.

Figure 7-1 Reflow profile

8 Ordering And Packaging

8.1 Part Number table

The Part number of QB20 series module is shown in the following table:

Platform	Ordering Number	Frequency	Max Power	Packing	Quantity	Remark
SX1262	L-LRMQB20-77NN4	433~510MHz	22dBm	Reel packaging	1500	To be released
SX1262	L-LRMQB20-97NN4	860~930MHz	22dBm	Reel packaging	1500	To be released

8.2 Product Packaging

This product uses tape and reel packaging. The packaging diagram and description are as follows.

Product placement diagram:

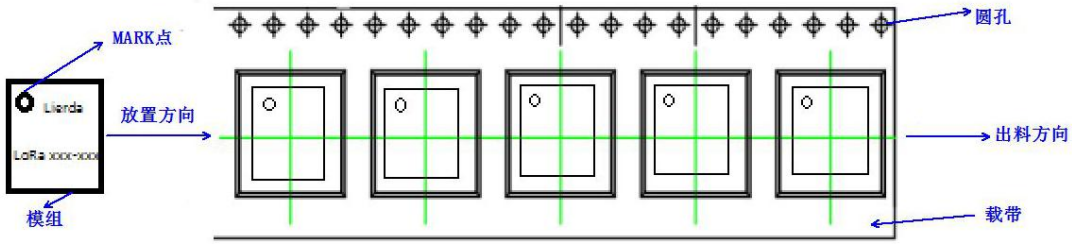

Overall schematic:

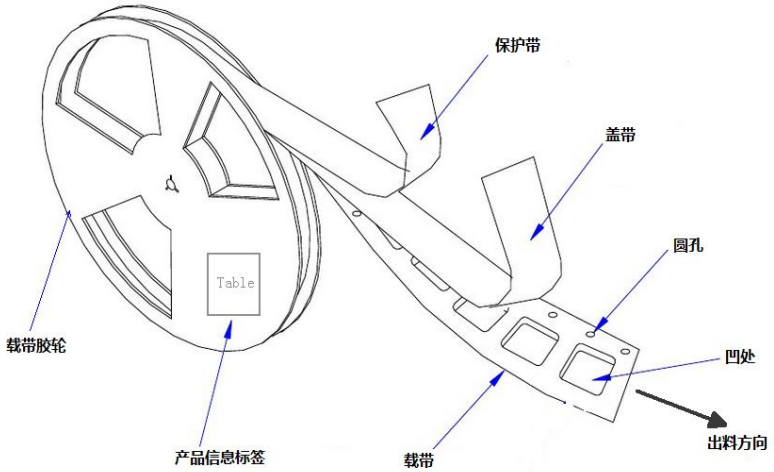

9 Contact Information

Lierda Technology Group Co., Ltd. always believes in providing customers with the most timely and comprehensive service as its purpose. If you need any help, you can contact the relevant personnel of our company at any time, or contact as follows:

Documentation website: http://wsn.lierda.com

Support email: lora_support@lierda.com

Technology Forum: http://bbs.lierda.com

Sample purchase: https://lierda.taobao.com

Federal Communication Commission (FCC) Radiation Exposure Statement

When using the product, maintain a distance of 20cm from the body to ensure compliance with RF exposure requirements.

This device complies with part 15 of the FCC rules. Operation is subject to the following two conditions: (1) this device may not cause harmful interference, and (2) this device must accept any interference received, including interference that may cause undesired operation.

NOTE: The manufacturer is not responsible for any radio or TV interference caused by unauthorized modifications or changes to this equipment. Such modifications or changes could void the user's authority to operate the equipment.

NOTE: This equipment has been tested and found to comply with the limits for a Class B digital device, pursuant to part 15 of the FCC Rules. These limits are designed to provide reasonable protection against harmful interference in a residential installation. This equipment generates uses and can radiate radio frequency energy and, if not installed and used in accordance with the instructions, may cause harmful interference to radio communications. However, there is no guarantee that interference will not occur in a particular installation. If this equipment does cause harmful interference to radio or television reception, which can be determined by turning the equipment off and on, the user is encouraged to try to correct the interference by one or more of the following measures:

- Reorient or relocate the receiving antenna.
- Increase the separation between the equipment and receiver.
- Connect the equipment into an outlet on a circuit different from that to which the receiver is connected.
- Consult the dealer or an experienced radio/TV technician for help.

Lierda 利尔达

FCC Caution: Any changes or modifications not expressly approved by the party responsible for compliance could void the user's authority to operate this equipment.

ORIGINAL EQUIPMENT MANUFACTURER (OEM) NOTES

The OEM must certify the final end product to comply with unintentional radiators (FCC Sections 15.107 and 15.109) before declaring compliance of the final product to Part 15 of the FCC rules and regulations. Integration into devices that are directly or indirectly connected to AC lines must add with Class II Permissive Change.

The OEM must comply with the FCC labeling requirements. If the module's label is not visible when installed, then an additional permanent label must be applied on the outside of the finished product which states: "Contains transmitter module FCC ID: 2AOFDQB20. Additionally, the following statement should be included on the label and in

the final product's user manual: "This device complies with Part 15 of the FCC Rules. Operation is subject to the following

two conditions: (1) This device may not cause harmful interferences, and

(2) this device must accept any interference received, including interference that may cause undesired operation."

The module is allowed to be installed in mobile and portable applications A module or modules can only be used without additional authorizations if they have been tested and granted under the same intended end - use operational conditions, including simultaneous transmission operations. When they have not been tested and granted in this manner, additional testing and/or FCC application filing may be required. The most straightforward approach to address additional testing conditions is to have the grantee responsible for the certification of at least one of the modules submit a permissive change application. When having a module grantee file a permissive change is not practical or feasible, the following

guidance provides some additional options for host manufacturers. Integrations using modules where additional testing and/or FCCapplication filing(s) may be required are: (A) a module used in devices requiring additional RF exposure compliance information (e.g., MPE evaluation or SAR testing); (B) limited and/or split modules not meeting all of the module requirements; and (C) simultaneous transmissions for independent collocated transmitters not previously granted together.

This Module is full modular approval, it is limited to OEM installation ONLY. Integration into devices that are directly or indirectly connected to AC lines must add with Class II Permissive Change. (OEM) Integrator has to assure compliance of the entire end product include the integrated Module. Additional measurements (15B) and/or equipment authorizations(e.g. Verification) may need to be addressed depending on co-location or simultaneous transmission issues if applicable.(OEM) Integrator is reminded to assure that these installation instructions will not be made available to the end user.

Lierda 利尔达