ELECTROMAGNETIC EMISSIONS COMPLIANCE REPORT
INTENTIONAL RADIATOR CERTIFICATION TO
FCC PART 15 SUBPARTC REQUIREMENT

OF

Time Attendance Terminal

MODEL No.: TM-838

FCC ID: 2AOFS-838

Trademark: N/A

REPORT NO: ES171115973W02

ISSUE DATE: April 17, 2018

Prepared for

SAFESCAN B.V.
Aluminiumstraat 65, 2718 RB Zoetermeer, The Netherlands

Prepared by

EMTEK(SHENZHEN) CO., LTD.

Bldg 69, Majialong Industry Zone, Nanshan District,
Shenzhen, Guangdong, China
TEL: 86-755-26954280
FAX: 86-755-26954282

VERIFICATION OF COMPLIANCE

Applicant:	SAFESCAN B.V. Aluminiumstraat 65, 2718 RB Zoetermeer, The Netherlands
Manufacturer:	ZKTECO CO., LTD. No.26, Pingshan 188 Industry zone, Tangxia Town, Dongguan City, Guangdong Province, China
Product Name:	Time Attendance Terminal
Model Number:	TM-838
Serial Number:	N/A
File Number:	ES171115973W02

We hereby certify that:

The above equipment was tested by EMTEK(SHENZHEN) CO., LTD.. The test data, data evaluation, test procedures, and equipment configurations shown in this report were made in accordance with the procedures given in ANSI C63.10 (2013) and the energy emitted by the sample EUT tested as described in this report is in compliance with conducted and radiated emission limits of FCC Rules Part 15.207&15.209.

The test results of this report relate only to the tested sample identified in this report.

Date of Test : November 15, 2017 to April 10, 2018

Prepared by : Yaping Shen

Yaping Shen /Tester

Reviewer : Joe Xia

Joe Xia/ Supervisor

Approve & Authorized Signer :

Lisa Wang/Manager

EMTEK (SHENZHEN) CO., LTD. TESTING

Table of Contents

1. GENERAL INFORMATION 4

1.1 PRODUCT DESCRIPTION 4
1.2 RELATED SUBMITTAL(S) / GRANT (S) 4
1.3 TEST METHODOLOGY 4
1.4 SPECIAL ACCESSORIES 4
1.5 EQUIPMENT MODIFICATIONS 4
1.6 TEST FACILITY 5

2. SYSTEM TEST CONFIGURATION 6

2.1 EUT CONFIGURATION 6
2.2 EUT EXERCISE 6
2.3 TEST PROCEDURE 6
2.4 LIMITATION 6

3. SUMMARY OF TEST RESULTS 7

4. CONDUCTED EMISSION TEST 8

4.1 APPLICABLE STANDARD 8
4.2 CONFORMANCE LIMIT 8
4.3 TEST CONFIGURATION 8
4.4 TEST PROCEDURE 8
4.5 MEASUREMENT EQUIPMENT USED: 8
4.6 TEST RESULT 9

5. RADIATED EMISSION TEST 11

5.1 MEASUREMENT PROCEDURE 11
5.2 TEST SET-UP (BLOCK DIAGRAM OF CONFIGURATION) 12
5.3 MEASUREMENT EQUIPMENT USED: 12
5.4 MEASUREMENT RESULT 13

6. ANTENNA APPLICATION 18

ANTENNA REQUIREMENT 18
RESULT 18

1. GENERAL INFORMATION

1.1 Product Description

A major technical descriptions of EUT is described as following:
Supply power: DC 12V
RFID Frequency: 125KHz
Modulation: ASK
Operating temperature: -20℃ ~ 55℃
Antenna type: Coil Antenna
Antenna gain: 0 dBi

Adapter:
Model: FJ-SW1201500N
Input: AC100-240V, 50-60Hz, 0.6A max
Output: 12V, 1.5A

1.2 Related Submittal(s) / Grant (s)

This submittal(s) (test report) is intended for FCC ID: 2AOFS-838 filing to comply with Section 15.207&15.209 of the FCC Part 15 Subpart C Rules.

1.3 Test Methodology

Both conducted and radiated testing was performed according to the procedures in ANSI C63.10 (2013) and Radiated testing was performed at an antenna to EUT distance 3 meters.

1.4 Special Accessories

Not available for this EUT intended for grant.

1.5 Equipment Modifications

Not available for this EUT intended for grant.

1.6 Test Facility

Site Description
EMC Lab. : Accredited by CNAS, 2016.10.24
The certificate is valid until 2022.10.28
The Laboratory has been assessed and proved to be in compliance with CNAS-CL01: 2006(identical to ISO/IEC17025: 2005)
The Certificate Registration Number is L2291

: Accredited by TUV Rheinland Shenzhen, 2016.5.19
The Laboratory has been assessed according to the requirements ISO/IEC 17025.

: Accredited by FCC, August 03, 2017
Designation Number: CN1204
Test Firm Registration Number: 882943

: Accredited by Industry Canada, November 24, 2015
The Certificate Registration Number is 4480A

2. System Test Configuration

2.1 EUT Configuration

The EUT configuration for testing is installed on RF field strength measurement to meet the Commissions requirement and operating in a manner which intends to maximize its emission characteristics in a continuous normal application.

2.2 EUT Exercise

The Transmitter was operated in the normal operating mode. The TX frequency was fixed which was for the purpose of the measurements.

2.3 Test Procedure

2.3.1 Radiated Emissions

The EUT is a placed on as turn table which is 0.8 m above ground plane. The turn table shall rotate 360 degrees to determine the position of maximum emission level. EUT is set 3m away from the receiving antenna which varied from 1m to 4m to find out the highest emission. And also, each emission was to be maximized by changing the polarization of receiving antenna both horizontal and vertical. In order to find out the max. emission, the relative positions of this hand-held transmitter(EUT) was rotated through three orthogonal axes according to the requirements in Section 13.1.4.1 of ANSI C63.10-2013.

2.4 Limitation

(1) Radiated Emission

FCC Part 15, Subpart C Section 15.209 limit of radiated emission for frequency below 1000GHz. The emissions from an intentional radiator shall not exceed the field strength level specified in the following table:

Frequency (MHz)	Field strength μV/m	Distance(m)	Field strength at 3m dBμV/m
0.009~0.490	2400/F(KHz)	300	See the remark
0.490~1.705	2400/F(KHz)	30	
1.705~30.0	30	30	
30-88	100	3	40
88-216	150	3	43.5
216-960	200	3	46
Above 960	500	3	54

Remark: 1. Emission level in dBuV/m=20 log (uV/m)
2. Measurement was performed at an antenna to the closed point of EUT distance of meters.
3. Distance extrapolation factor =40log(Specific distance/ test distance)(dB);
Limit line=Specific limits(dBuV) + distance extrapolation factor.

3. Summary of Test Results

FCC Rule	Description Of Test	Result
15.207	AC Power Conducted Emission	Pass
15.209	Radiated Emission	Pass

4. CONDUCTED EMISSION TEST

4.1 Applicable Standard

According to FCC Part 15.207(a)

4.2 Conformance Limit

Conducted Emission Limit

Frequency(MHz)	Quasi-peak	Average
0.15-0.5	66-56	56-46
0.5-5.0	56	46
5.0-30.0	60	50

Note: 1. The lower limit shall apply at the transition frequencies
2. The limit decreases in line with the logarithm of the frequency in the range of 0.15 to 0.50MHz.

4.3 Test Configuration

Test according to clause 7.3 conducted emission test setup

4.4 Test Procedure

The EUT was placed on a table which is 0.8m above ground plane.
Maximum procedure was performed on the highest emissions to ensure EUT compliance.
Repeat above procedures until all frequency measured were complete.

4.5 Measurement Equipment Used:

EQUIPMENT TYPE	MFR	MODEL NUMBER	SERIAL NUMBER	LAST CAL.	Due. CAL
Test Receiver	Rohde & Schwarz	ESCI	26115-010-0027	May 20, 2017	May 19, 2018
L.I.S.N.	Rohde & Schwarz	ENV216	101161	May 20, 2017	May 19, 2018
50Ω Coaxial Switch	Anritsu	MP59B	6100175589	May 21, 2017	May 20, 2018

4.6 Test Result

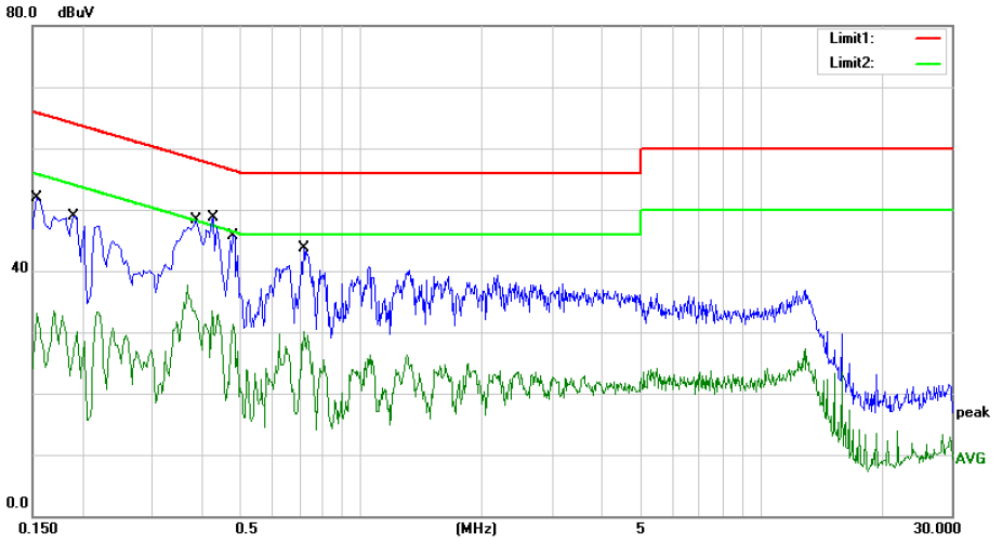

Site Conduction #2 Phase: *L1* Temperature: 24.9

Limit: (CE)FCC PART 15 C_QP Power: AC 120V/60Hz Humidity: 54 %

Mode: WIFI+125KHz ON

Note:

No.	Mk.	Freq.	Reading Level	Correct Factor	Measure-ment	Limit	Over		
		MHz	dBuV	dB	dBuV	dBuV	dB	Detector	Comment
1		0.1540	41.99	9.89	51.88	65.78	-13.90	QP	
2		0.1540	23.20	9.89	33.09	55.78	-22.69	AVG	
3		0.1900	39.09	9.89	48.98	64.04	-15.06	QP	
4		0.1900	23.65	9.89	33.54	54.04	-20.50	AVG	
5		0.3860	38.31	9.91	48.22	58.15	-9.93	QP	
6		0.3860	27.79	9.91	37.70	48.15	-10.45	AVG	
7	*	0.4260	38.79	9.91	48.70	57.33	-8.63	QP	
8		0.4260	23.56	9.91	33.47	47.33	-13.86	AVG	
9		0.4780	35.74	9.92	45.66	56.37	-10.71	QP	
10		0.4780	21.30	9.92	31.22	46.37	-15.15	AVG	
11		0.7180	33.72	9.94	43.66	56.00	-12.34	QP	
12		0.7180	20.17	9.94	30.11	46.00	-15.89	AVG	

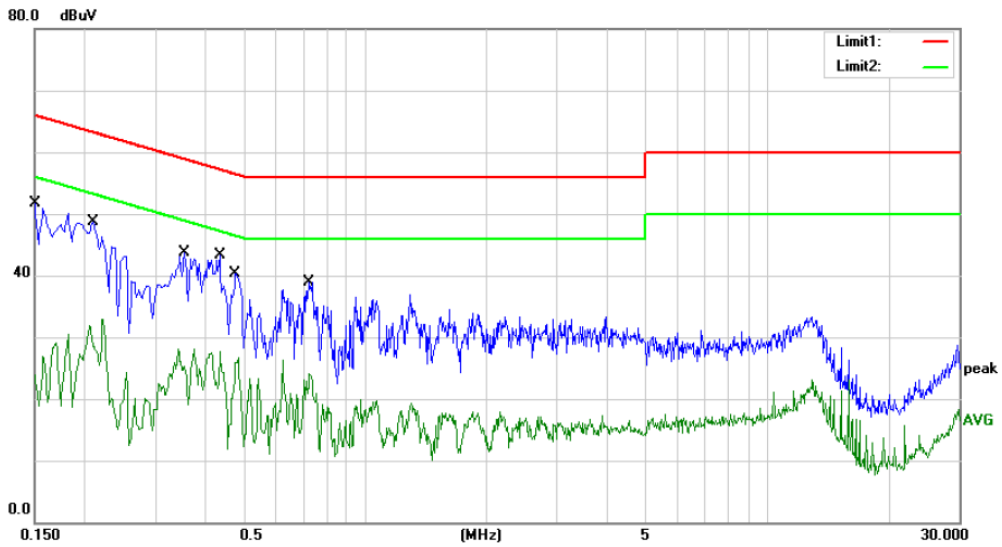

Site Conduction #2 Phase: *N* Temperature: 24.9

Limit: (CE)FCC PART 15 C_QP Power: AC 120V/60Hz Humidity: 54 %

Mode: WIFI+125KHz ON

Note:

No.	Mk.	Freq.	Reading Level	Correct Factor	Measure-ment	Limit	Over		
		MHz	dBuV	dB	dBuV	dBuV	dB	Detector	Comment
1		0.1500	41.91	9.89	51.80	66.00	-14.20	QP	
2		0.1500	17.04	9.89	26.93	56.00	-29.07	AVG	
3		0.2100	38.88	9.90	48.78	63.21	-14.43	QP	
4		0.2100	23.05	9.90	32.95	53.21	-20.26	AVG	
5		0.3540	33.75	9.91	43.66	58.87	-15.21	QP	
6		0.3540	18.25	9.91	28.16	48.87	-20.71	AVG	
7	*	0.4340	33.30	9.91	43.21	57.18	-13.97	QP	
8		0.4340	17.82	9.91	27.73	47.18	-19.45	AVG	
9		0.4740	30.45	9.92	40.37	56.44	-16.07	QP	
10		0.4740	16.84	9.92	26.76	46.44	-19.68	AVG	
11		0.7220	28.97	9.94	38.91	56.00	-17.09	QP	
12		0.7220	14.17	9.94	24.11	46.00	-21.89	AVG	

5. Radiated Emission Test

5.1 Measurement Procedure

1. The EUT was placed on a turn table which is 0.8m above ground plane.
2. Maximum procedure was performed on the six highest emissions to ensure EUT compliance.
3. And also, each emission was to be maximized by changing the polarization of receiving antenna both horizontal and vertical.
4. Repeat above procedures until all frequency measured was complete.

When spectrum scanned from 9KHz to 150KHz setting resolution bandwidth 200Hz and video bandwidth 1kHz.

EMI Test Receiver	Setting
Attenuation	Auto
RB	200Hz
VB	1kHz
Detector	QP
Trace	Max hold

When spectrum scanned from 150KHz to 30MHz setting resolution bandwidth 9 kHz and video bandwidth 30kHz.

EMI Test Receiver	Setting
Attenuation	Auto
RB	9kHz
VB	30kHz
Detector	QP
Trace	Max hold

When spectrum scanned from 30 MHz to 1GHz setting resolution bandwidth 120 kHz and video bandwidth 300kHz.

EMI Test Receiver	Setting
Attenuation	Auto
RB	120kHz
VB	300kHz
Detector	QP
Trace	Max hold

5.2 Test SET-UP (Block Diagram of Configuration)

(A) Radiated Emission Test Set-Up, Frequency Below 30MHz

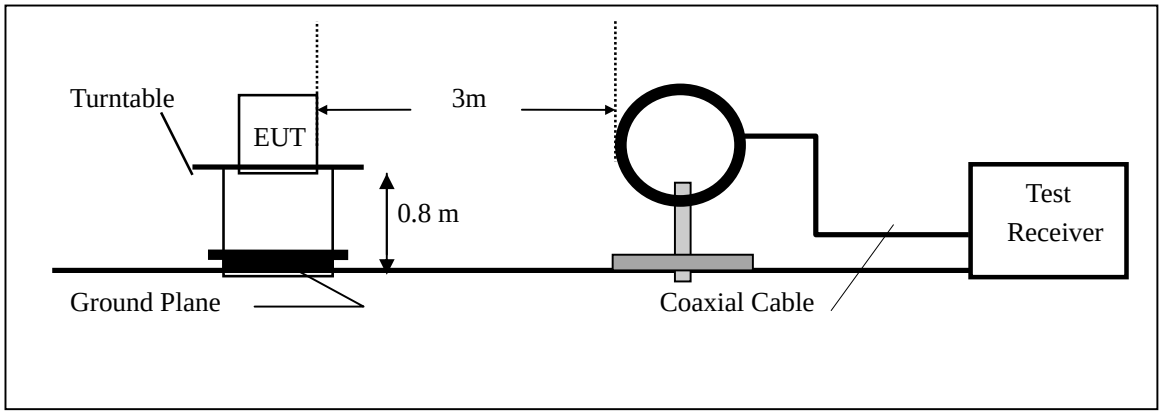

(B) Radiated Emission Test Set-Up, Frequency Below 1000MHz

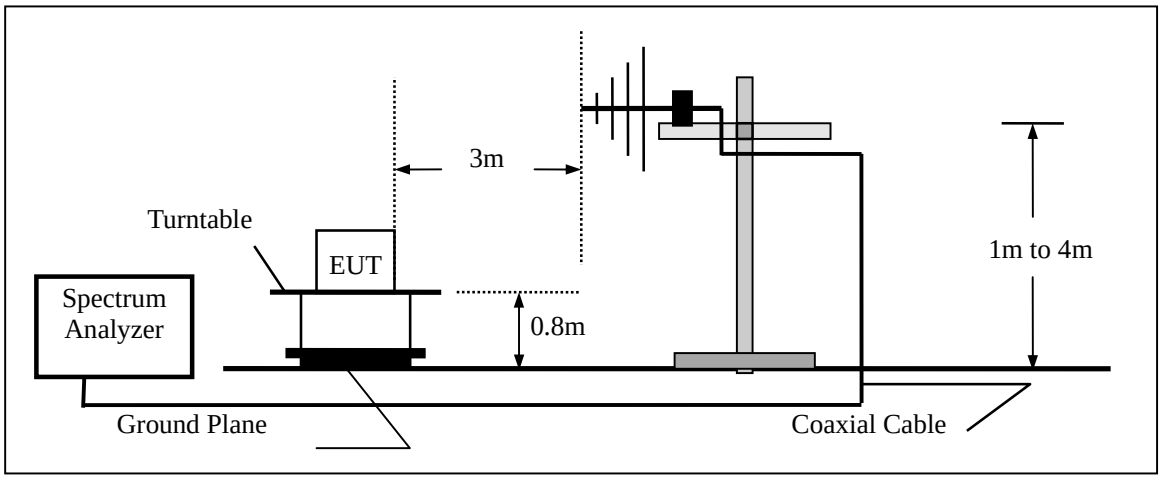

5.3 Measurement Equipment Used:

EQUIPMENT TYPE	MFR	MODEL NUMBER	SERIAL NUMBER	LAST CAL.	CAL DUE.
EMI Test Receiver	Rohde & Schwarz	ESU	1302.6005.26	May 21, 2017	May 20, 2018
Loop Antenna	Schwarzbeck	FMZB 1519	1519-012	May 20, 2017	May 19, 2018
Pre-Amplifier	HP	8447F	2944A07999	May 20, 2017	May 19, 2018
Bilog Antenna	Schwarzbeck	VULB9163	142	May 20, 2017	May 19, 2018
Cable	Schwarzbeck	AK9513	ACRX1	May 21, 2017	May 20, 2018
Cable	Rosenberger	N/A	FP2RX2	May 21, 2017	May 20, 2018
Cable	Schwarzbeck	AK9513	CRPX1	May 21, 2017	May 20, 2018
Cable	Schwarzbeck	AK9513	CRRX2	May 21, 2017	May 20, 2018

5.4 Measurement Result

Note: the amplitude of spurious emission that is attenuated by more than 20dB below the permissible Limit.

Operation Mode:	125kHz TX	Test Date :	November 30, 2017
Frequency Range:	9KHz~30MHz	Temperature :	24℃
Test Result:	PASS	Humidity :	53 %
Measured Distance:	3m	Test By:	KK

X:

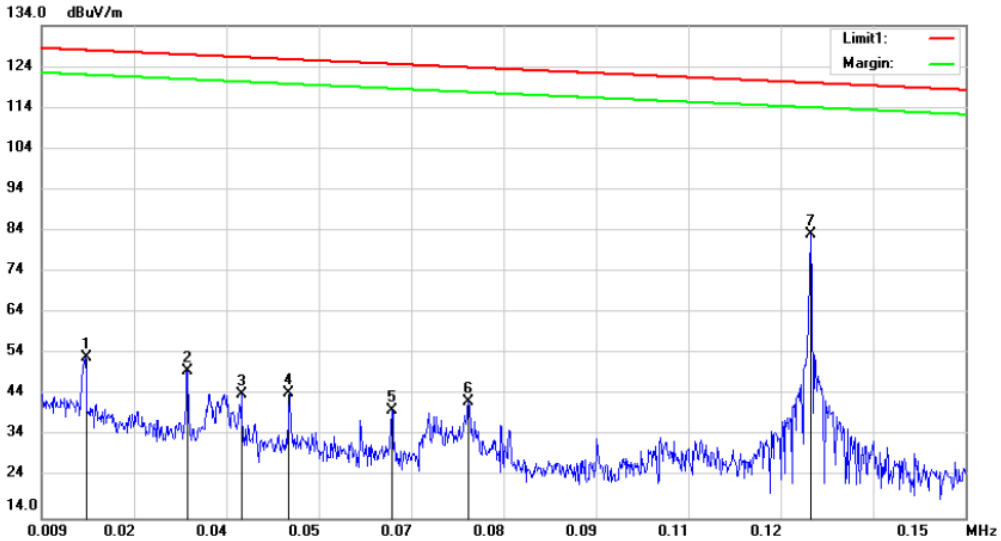

Site 3m Chamber #3 Polarization: X Temperature: 24 C
Limit: (RE)FCC PART 15.209(9K-30M) Power: AC 120V/60Hz Humidity: 53 %

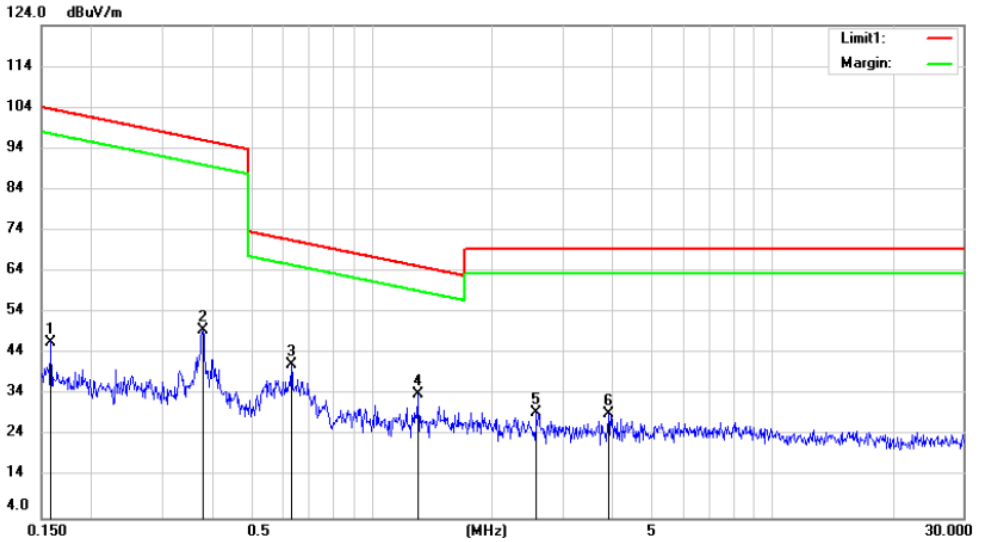

Site 3m Chamber #3 Polarization: X Temperature: 24 C
Limit: (RE)FCC PART 15.209(9K-30M) Power: AC 120V/60Hz Humidity: 53 %

Y:

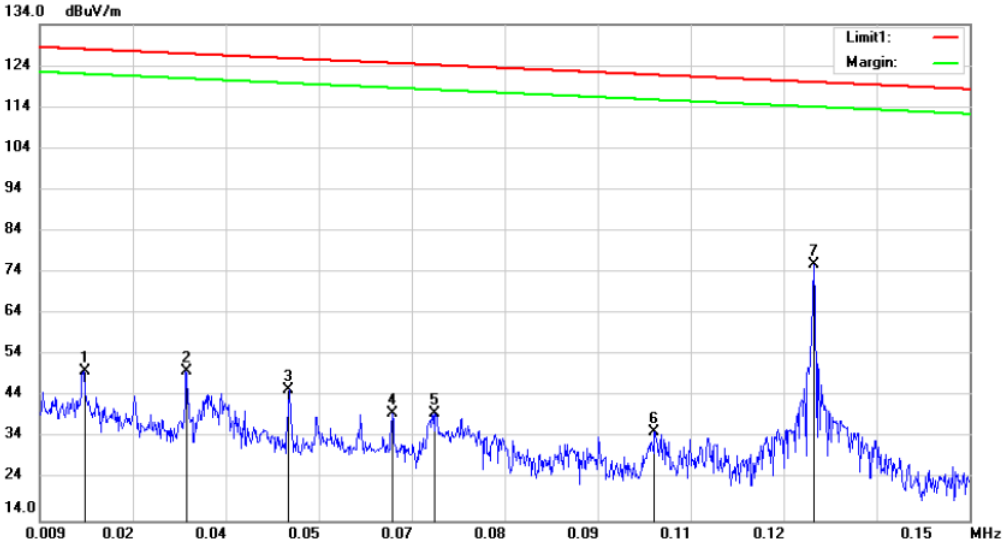

Site 3m Chamber #3 Polarization: Y Temperature: 24 C
Limit: (RE)FCC PART 15.209(9K-30M) Power: AC 120V/60Hz Humidity: 53 %

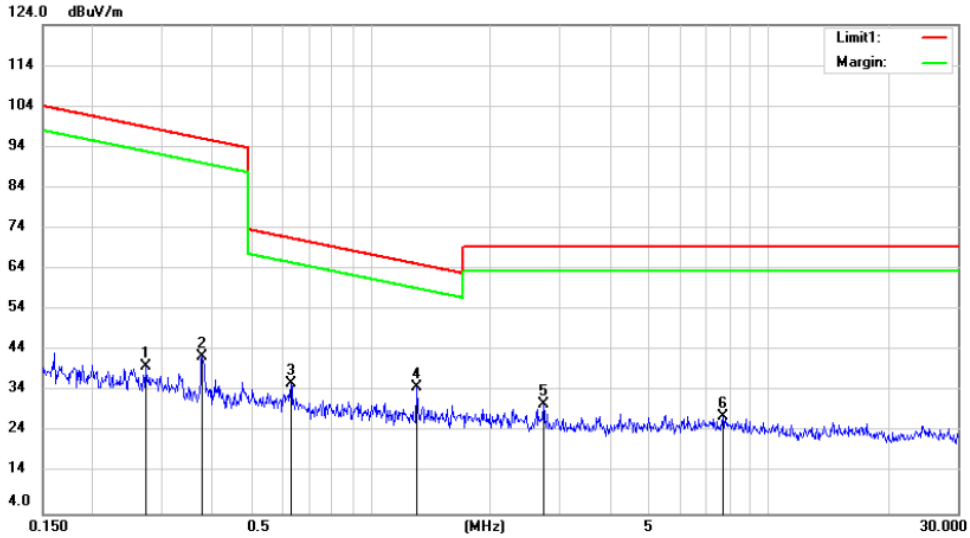

Site 3m Chamber #3 Polarization: Y Temperature: 24 C
Limit: (RE)FCC PART 15.209(9K-30M) Power: AC 120V/60Hz Humidity: 53 %

Z:

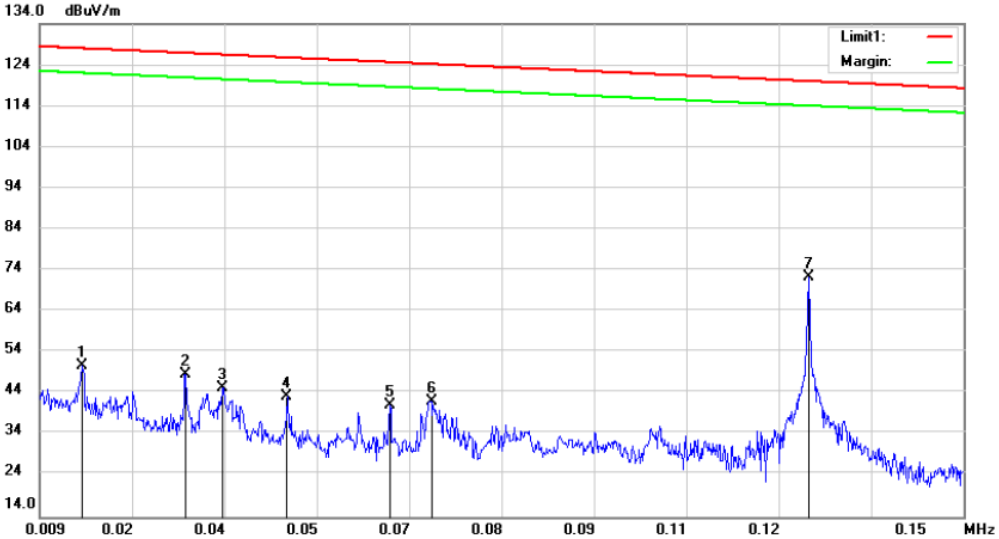

Site 3m Chamber #3 Polarization: Z Temperature: 24 C
Limit: (RE)FCC PART 15.209(9K-30M) Power: AC 120V/60Hz Humidity: 53 %

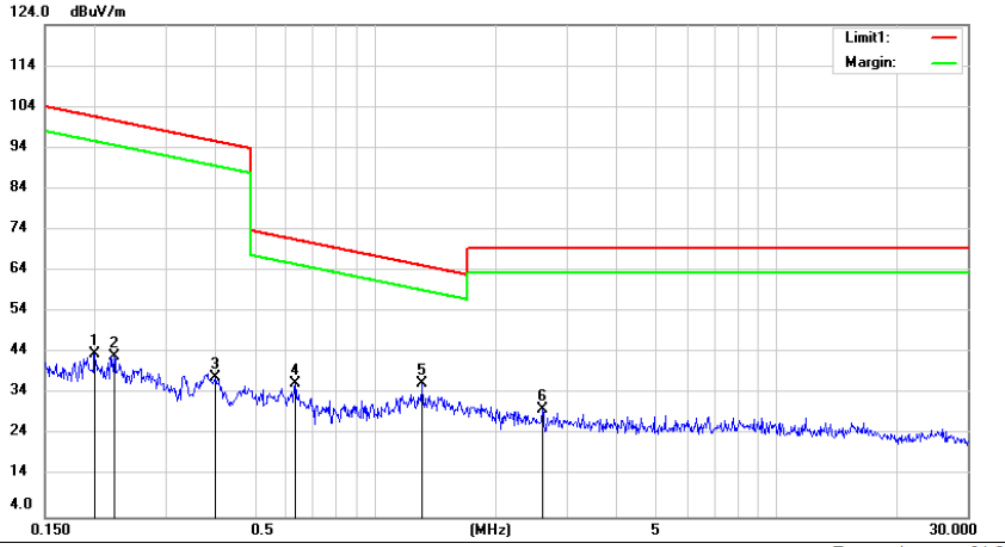

Site 3m Chamber #3 Polarization: Z Temperature: 24 C
Limit: (RE)FCC PART 15.209(9K-30M) Power: AC 120V/60Hz Humidity: 53 %

Operation Mode:	125kHz TX	Test Date :	November 30, 2017
Frequency Range:	30~1000MHz	Temperature :	24℃
Test Result:	PASS	Humidity :	53 %
Measured Distance:	3m	Test By:	KK

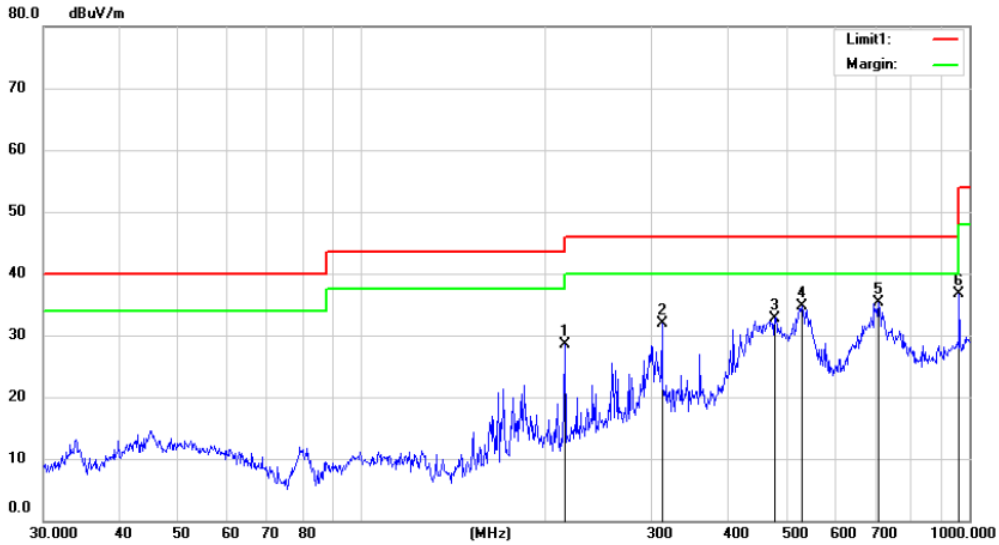

Site 3m Chamber 3# Polarization: ***Horizontal*** Temperature: 24 C

Limit: (RE)FCC PART 15 C Power: AC 120V/60Hz Humidity: 53 %

Mode:TX 125KHz

Note:

No.	Mk.	Freq.	Reading Level	Correct Factor	Measure-ment	Limit	Over		Antenna Height	Table Degree	
		MHz	dBuV	dB	dBuV/m	dBuV/m	dB	Detector	cm	degree	Comment
1		216.0240	43.86	-15.37	28.49	46.00	-17.51	QP			
2		312.1794	44.06	-12.16	31.90	46.00	-14.10	QP			
3		478.8455	40.81	-8.01	32.80	46.00	-13.20	QP			
4		530.1013	41.34	-6.65	34.69	46.00	-11.31	QP			
5	*	709.1821	38.62	-3.36	35.26	46.00	-10.74	QP			
6		962.1622	35.92	0.77	36.69	54.00	-17.31	QP			

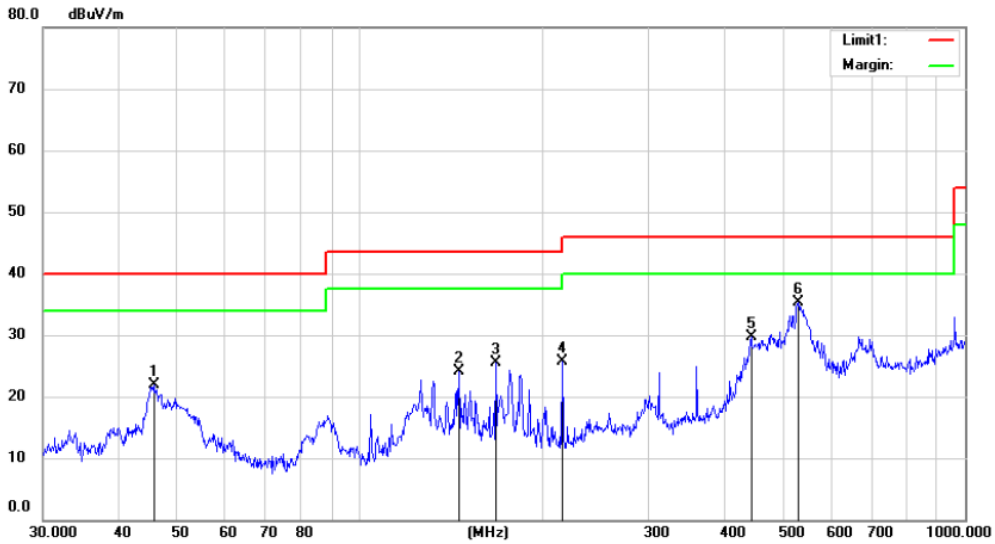

Site 3m Chamber 3# Polarization: ***Vertical*** Temperature: 24 C

Limit: (RE)FCC PART 15 C Power: AC 120V/60Hz Humidity: 53 %

Mode:TX 125KHz

Note:

No.	Mk.	Freq.	Reading Level	Correct Factor	Measure-ment	Limit	Over		Antenna Height	Table Degree	
		MHz	dBuV	dB	dBuV/m	dBuV/m	dB	Detector	cm	degree	Comment
1		45.6947	35.89	-14.05	21.84	40.00	-18.16	QP			
2		145.8611	43.40	-19.38	24.02	43.50	-19.48	QP			
3		167.8242	43.68	-18.15	25.53	43.50	-17.97	QP			
4		216.0240	41.00	-15.37	25.63	46.00	-20.37	QP			
5		443.2942	38.51	-8.74	29.77	46.00	-16.23	QP			
6	*	530.1013	42.03	-6.65	35.38	46.00	-10.62	QP			

6. Antenna Application

Antenna Requirement

Standard	Requirement
FCC CRF Part 15.203	An intentional radiator shall be designed to ensure that no antenna other than that furnished by the responsible party shall be used with the device. The use of a permanently attached antenna or of an antenna that uses a unique coupling to the intentional radiator shall be considered sufficient to comply with the provisions of this section. The manufacturer may design the unit so that a broken antenna can be replaced by the user, but the use of a standard antenna jack or electrical connector is prohibited. This requirement does not apply to carrier current devices or to devices operated under the provisions of §15.211, §15.213, §15.217, §15.219, or §15.221. Further, this requirement does not apply to intentional radiators that must be professionally installed, such as perimeter protection systems and some field disturbance sensors, or to other intentional radiators which, in accordance with §15.31(d), must be measured at the installation site. However, the installer shall be responsible for ensuring that the proper antenna is employed so that the limits in this part are not exceeded.

For intentional device, according to FCC 47 CFR Section 15.203, an intentional radiator shall be designed to ensure that no antenna other than that furnished by the responsible party shall be used with the device. if transmitting antennas of directional gain greater than 6dBi are used, the power shall be reduced by the amount in dB that the directional gain of the antenna exceeds 6dBi.

Result

The EUT'S antenna is coil antenna, The antenna's gain is 0dBi and meets the requirement and the antenna can't be replaced by the user, which in accordance to section 15.203.