The TowGo Trailer Backup Navigation Aid

INSTALLATION GUIDE

TowGo

TELL YOUR TRAILER WHERE TO GO

TABLE OF CONTENTS

1. THANK YOU! 1

2. ABOUT YOUR TRAILER HITCH SENSOR 1

3. ABOUT YOUR STEERING WHEEL SENSOR 2

4. BEFORE YOU GET STARTED 2

5. GETTING STARTED 3

RADIO ID's

STEERING WHEEL SENSOR: FCC ID: 2AOGL1
TRAILER HITCH SENSOR: FCC ID: 2AOGL2

USA

"This device complies with Part 15 of the FCC Rules. Operation is subject to the following two conditions: (1) this device may not cause harmful interference, and (2) this device must accept any interference received, including interference that may cause undesired operation."

"Changes or modifications not expressly approved by TowGo, LLC *could void the user's authority to operate the equipment."*

"*This equipment has been tested and found to comply with the limits for a Class B digital device, pursuant to Part 15 of the FCC Rules. These limits are designed to provide reasonable protection against harmful interference in a residential installation. This equipment generates, uses and can radiate radio frequency energy and, if not installed and used in accordance with the instructions, may cause harmful interference to radio communications. However, there is no guarantee that interference will not occur in a particular installation. If this equipment does cause harmful interference to radio or television reception, which can be determined by turning the equipment off and on, the user is encouraged to try to correct the interference by one of the following measures:*

- *Reorient or relocate the receiving antenna.*
- *Increase the separation between the equipment and receiver.*
- *Connect the equipment into an outlet on a circuit different from that to which the receiver is connected.*
- *Consult the dealer or an experienced radio/TV technician for help."*

"This equipment has been tested and found to comply with the limits for a Class A digital device, pursuant to Part 15 of the FCC Rules. These limits are designed to provide reasonable protection against harmful interference when the equipment is operated in a commercial environment. This equipment generates, uses and can radiate radio frequency energy and, if not installed and used in accordance with the instruction manual, may cause harmful interference to radio communications. Operation of this equipment in a residential area is likely to cause harmful interference in which case the user will be required to correct the interference at his own expense."

This device complies with FCC and IC radiation exposure limits set forth for general population (uncontrolled exposure). This device must not be collocated or operating in conjunction with any other antenna or transmitter.

Canada

This device complies with Industry Canada licence-exempt RSS standard(s). Operation is subject to the following two conditions: (1) this device may not cause interference, and (2) this device must accept any interference, including interference that may cause undesired operation of the device.

Le présent appareil est conforme aux CNR d'Industrie Canada applicables aux appareils radio exempts de licence. L'exploitation est autorisée aux deux conditions suivantes : (1) l'appareil ne doit pas produire de brouillage, et (2) l'appareil doit accepter tout brouillage radioélectrique subi, même si le brouillage est susceptible d'en compromettre le fonctionnement.

THANK YOU FOR YOUR PURCHASE!

Thank you for purchasing the TowGo Trailer Backup Navigation Aid. We are very happy to have you as one of our customers and we hope that our product will provide you with years of enjoyment. This installation manual will help you become familiar with the Steering Wheel Sensor and the Trailer Hitch Sensor that came with your product. After installation, please refer to your Operator's Manual.

ABOUT YOUR TRAILER HITCH SENSOR

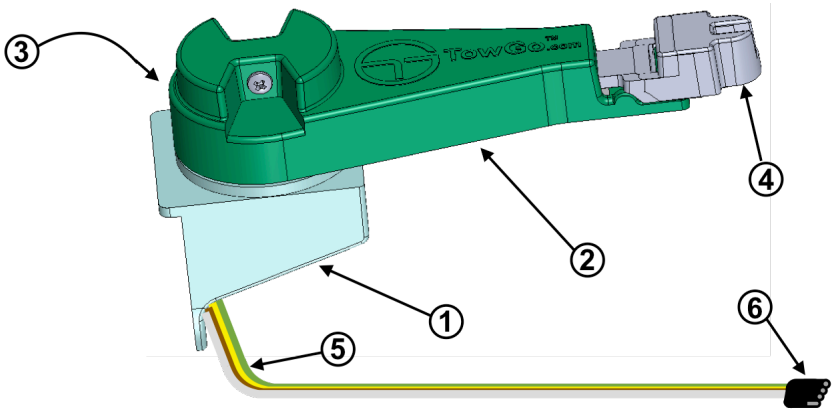

1 Main Housing
2 Swing Arm
3 LED Status Indicator (rear side)
4 Stretch Cord Attachment Clip
5 Flat-four Cable
6 Flat-four Cable Plug

ABOUT YOUR STEERING WHEEL SENSOR

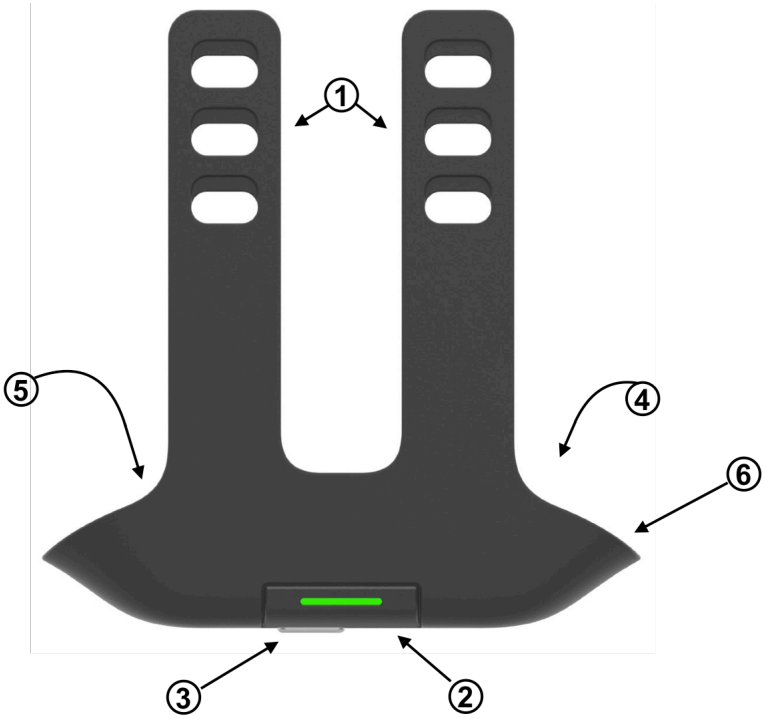

1 Steering Wheel Attachment Straps
2 LED Status Indicator
3 Power/Initialize Button
4 Strap Engagement Hooks (rear side)
5 USB Battery Charging Port (inner top side)
6 Cosmetic Skirt

BEFORE YOU GET STARTED

Charge your Steering Wheel Sensor:

Locate the USB charging cable that came with your purchase (or one of your own). On the inner top side of your Steer Sensor, you will see a USB charging input port. Plug the mini-USB end of the cord into the charging port; plug the other end into a powered USB plug. (Note: the supplied USB cord can only be used for charging.) Allow at least two (2) hours for charging.

GETTING STARTED

Attach the Trailer Hitch Sensor to your trailer (see APPENDIX A). Connect the flat-four cable to your vehicle's trailer wiring port or trailer wiring harness. If necessary, a flat-four wiring adapter (such as a 2-Way 4-Pin Y-Splitter having one male and two female connectors) can be purchased where auto parts are sold. Turn on the lights of the vehicle to power up the Trailer Hitch Sensor.

Attach the Steering Wheel Sensor to your vehicle's steering wheel. Hold the sensor against the inside curve of the steering wheel with the LED Status Indicator facing you. Wrap the two Attachment Straps to the backside of the steering wheel and hook them onto the Strap Engagement Hooks. Power-up the Steering Wheel Sensor by briefly pressing the Power/Initialize Button on the bottom surface of the Sensor.

Load the TowGo App onto your Android™ cell phone or tablet. Launch the App and, when it finishes starting up, you will see a colorful screen with two dark red corners:

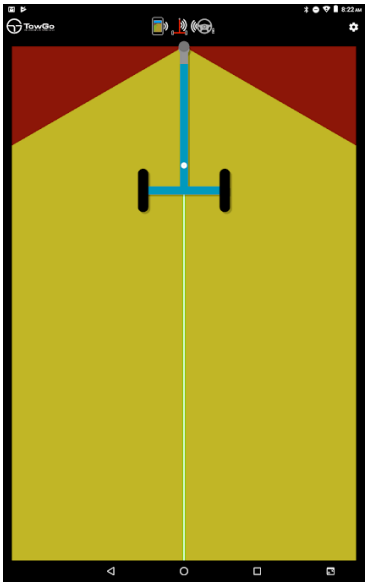

Great work! You are now ready to start learning how to operate your TowGo Trailer Backup Navigation Aid. Please refer to your Operator's Manual for the specifics of operation.

APPENDIX A

DETERMINE U-BOLT SIZES

The TowGo‘ Trailer Backup Navigation Aid requires **three** U-bolts for installation. ***These U-bolts are not included with the basic system***, but rather must be selected for your specific vehicle and trailer.

Two of the U-bolts are for attaching the trailer sensor. The trailer sensor is attached to the trailer just behind the coupler. Measure the top-to-bottom thickness of the trailer beam at the point of installation as shown by the arrows in the following drawing. You will need **two** U-bolts that must be this measured size or slightly larger.

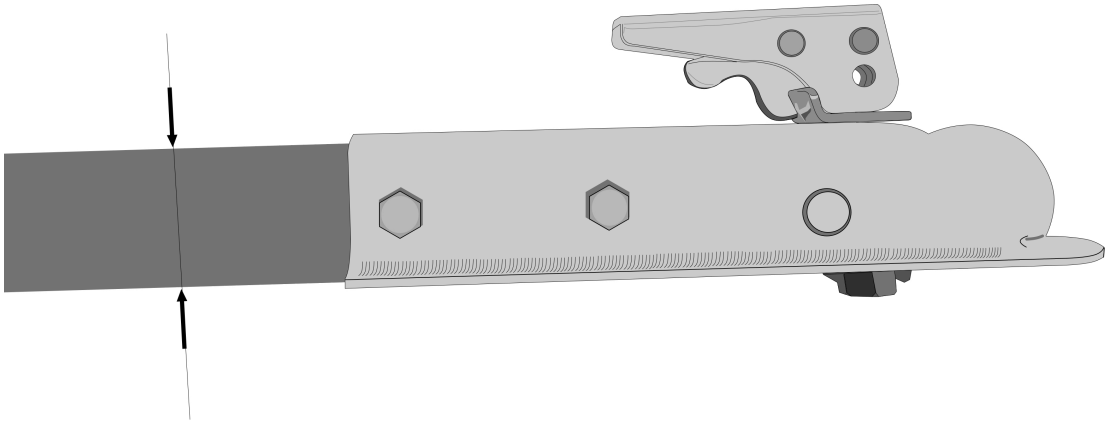

One of the U-bolts is for attaching the hitch receiver bracket. The hitch receiver bracket is attached onto the top of the hitch receiver. Measure the side-to-side thickness of the hitch receiver at the point of installation as shown by the arrows in the following drawing. This **one** U-bolt must be at least this measured size or slightly larger.

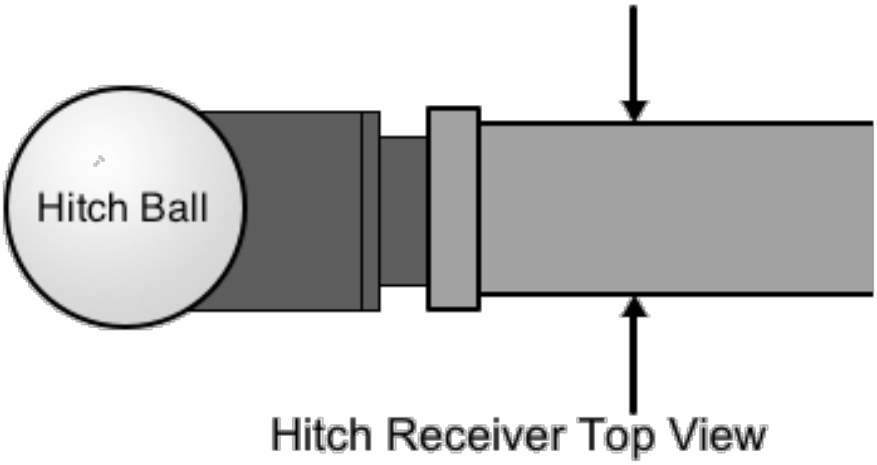

INSTALL THE TRAILER SENSOR

The Trailer Sensor is attached to the trailer just behind the hitch ball coupler using two U-bolts. Locate the following parts in the Installation Kit:

4 Nuts
4 Lock-Washers
2 U-bolt Plates
1 Trailer Sensor Assembly
2 U-bolts

Install the bracket:

1) Slide two **U-bolts** onto the trailer tongue just behind the coupler, from the side.
2) Place the **Trailer Sensor Assembly** onto the ends of the U-bolt.
3) Place two **U-bolt Plates** onto the ends of the U-bolt to brace the Trailer Sensor Assembly.
4) Place a **Lock-Washer** onto each end of both U-bolts.
5) Turn a **Nut** onto each end of both U-bolts and tighten into place.

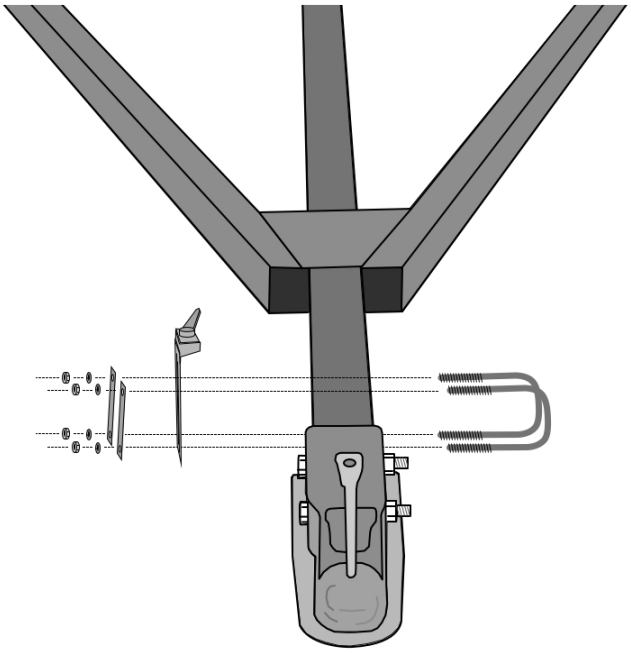

Note: the trailer sensor should be above the tongue such that the tongue will provide some protection from kicked up road debris. Position the trailer sensor assembly close to the coupler, but not so close that the coupler latch lever can collide with and damage the sensor arm.

MEASURE THE TRAILER SENSOR LOCATION

The Trailer Sensor should already be attached to the trailer using a pair of U-bolts.

Measure the distance (*y*) from the centerline of the reinforcement rib to the centerline of the hitch ball as shown in the following drawing:

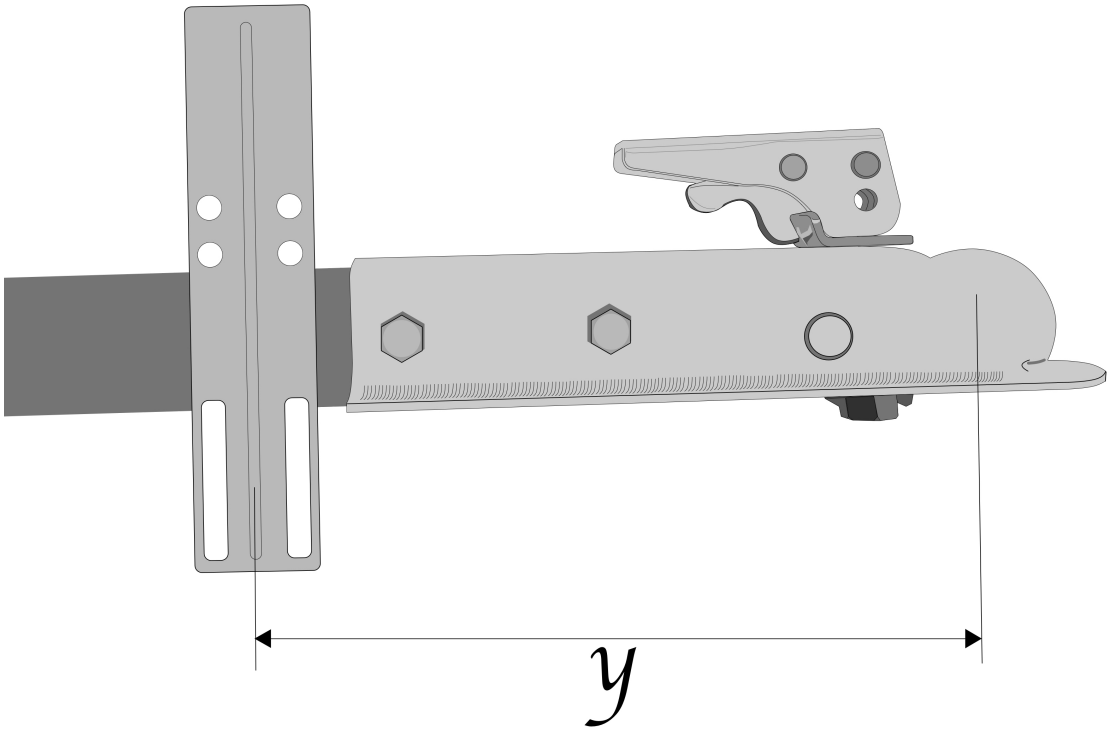

Measure using millimeters or inches (if inches, measure to the nearest 1/16 of an inch). The accuracy of the overall system is affected by how precisely you make this measurement.

INSTALL THE HITCH RECEIVER BRACKET

The Hitch Receiver Bracket is attached to the hitch receiver using a U-bolt. Locate the following parts in the Installation Kit:

2 Nuts
2 Lock-Washers
1 Bracket
1 U-bolt Plate
1 U-bolt

Install the bracket:

1) Slide the **U-bolt** up onto the hitch receiver from below.
2) Place the **U-bolt Plate** down onto the ends of the U-bolt.
3) Place the **Bracket** down onto the ends of the U-bolt. Center it left-to-right.
4) Place a **Lock-Washer** onto both U-bolt ends.
5) Turn a **Nut** onto both U-bolt ends and tighten into place.

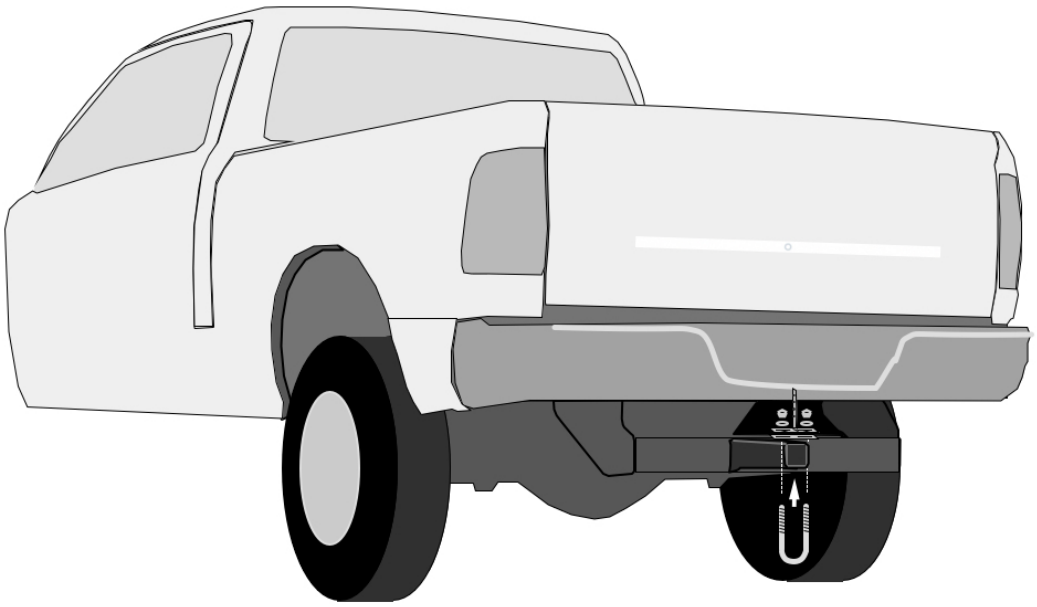

MEASURE THE HITCH RECEIVER BRACKET LOCATION

The Hitch Receiver Bracket should already be attached to the hitch receiver using a U-bolt.

Measure the distance (*x*) from the centerline of the U-bolt to the centerline of the hitch ball as shown in the following drawing:

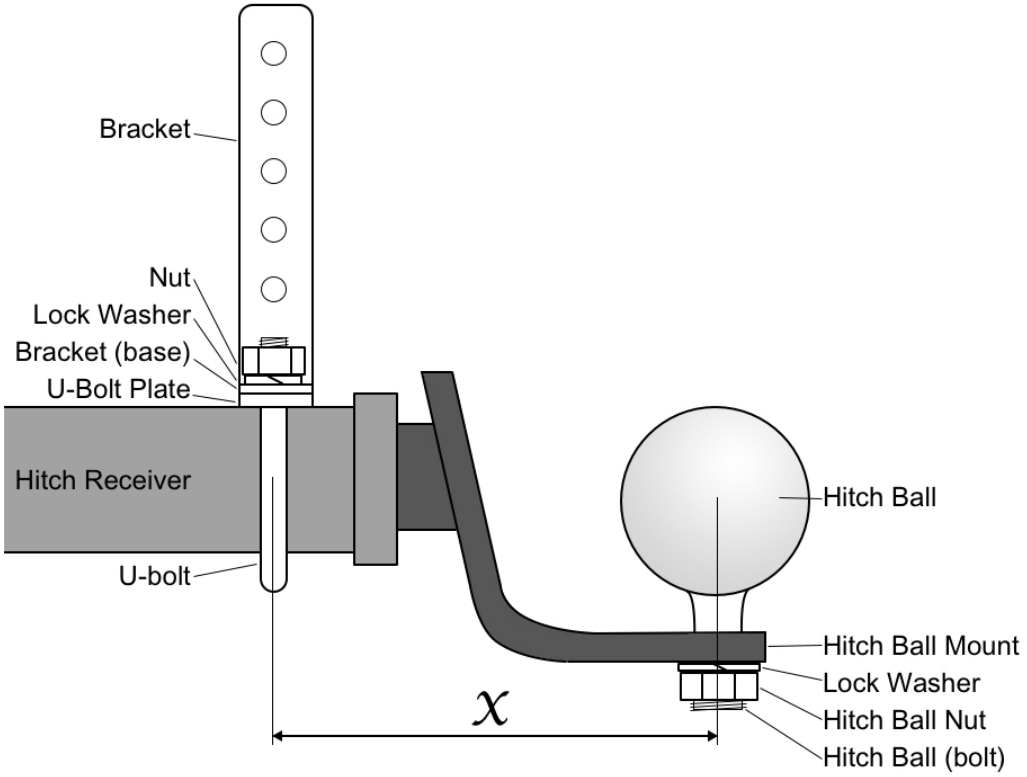

Measure using millimeters or inches (if inches, measure to the nearest 1/16 of an inch). The accuracy of the overall system is affected by how precisely you make this measurement.

Note: the hitch receiver on some vehicles is located below the vehicle's rear bumper. In such instances, the bracket can be installed on the portion of the hitch ball mount (where it is inserted into the hitch receiver).

MEASURE AND ASSEMBLE THE STRETCH CORD

The Stretch Cord must be measured and assembled according to your particular installation to ensure proper tension on your cord at all times. Failing to follow these instructions will damage your Trailer Hitch Sensor, prevent proper operation, and void your warranty.

1) Insert the Stretch Cord into the Stretch Cord Attachment Clip from the top side.
2) Tie a single knot in the end of the cord on the bottom side to prevent it being pulled back through.
3) Insert the free end of the Stretch Cord through the small coil of the Bracket Clip BUT DO NOT TIE a knot. Slide the bracket clip down the cord towards the Stretch Cord Attachment Clip.
4) Obtain the length of the cord from the App. The length is measured from knot to knot and will be provided by the App after you input the measurements taken above for *x* and *y*. With no tension in the cord, tie the second knot where its distance is the provided length away from the first knot.
5) Slide the Bracket Clip back down the cord until it stops at the second knot.
6) Hook the Stretch Cord Attachment Clip into the tip of the Swing Arm.
7) Clip the Bracket Clip onto the Hitch Receiver Bracket; choose a hole that puts the stretch cord in its most level position.

Please remember to unclip the Stretch Cord before uncoupling your trailer!
Also remember to reinstall the Stretch Cord before using your TowGo Trailer Backup Navigation Aid.

The wordmarks “TowGo” and “Tell your trailer where to go” are trademarks of TowGo, LLC. “Bluetooth” and “Android” are trademarks of their respective owners.