TROUBLE SHOOTING

Fault	Possible Cause	Solution
No sound	1. No input sound source. 2. Volume is too low.	1. Use a better music signal. 2. Adjust volume.
Distortion of sound	1. Volume too high. 2. Speaker may be damaged.	1. Turn down the volume. 2. If speaker is damaged, repair or replace it.
Karaoke does not work	1. Microphone plug is not fully inserted. 2. Microphone switch is not on. 3. Microphone volume knob is at the lowest position.	1. Plug microphone properly into the socket. 2. Turn on microphone switch. 3. Adjust microphone volume properly..
MP3 does not play	1. The song format in the U disc is incorrect. 2. Improper operation has caused a process disorder. 3. USB disc is disconnected.	1. Transform song format into Mp3 format. 2. Reboot the machine. 3. Insert USB disc properly.

BUILT-IN BT FUNCTION

- Press “STANDBY/ INPUT” button to choose the input signal source as BT channel when starting the machine.
- Please ensure the BT devices you want to connect is open. Then scan and connect the speaker with the device. When the connection is successful, “tick” tone will prompt. If the speaker can’t be connected, please restart the speaker or the device and try again.
- After the mobile phone and the BT are successfully connected, you can play music. To ensure continuous stability of the music signal, try to keep the BT and the mobile phone facing one another.
- This unit supports iPad, iPhone, Samsung, HTC, MOTOROLA, Nokia and other BT mobile devices wirelessly transmitting audio. It supports stereo playing of A2DP.
- The BT of the unit can be used up to 10 meters if there are no barriers.

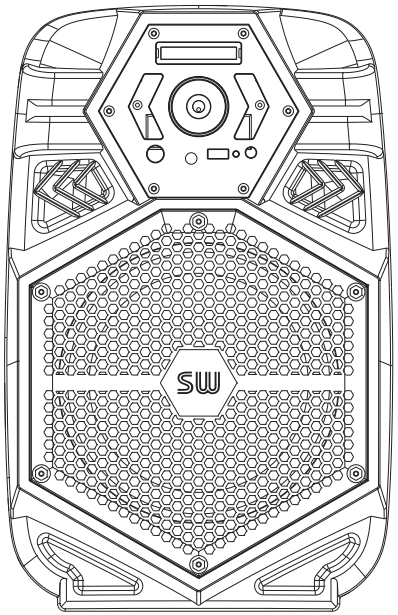

Q8

Portable Wireless Speaker

FCC Warnning:
This equipment has been tested and found to comply with the limits for a Class B digital device,
Pursuant to part 15 of the FCC Rules. These limits are designed to provide reasonable protection against harmful interference ina residential installation. This equipment generates, uses and can radiate radio frequency energy and, if not installed and used in accordance with the instructions, may cause harmful interference to radio communications. However, there is no guarantee that interference will not occur in a particular installation. If this equipment does cause harmful interference to radio or television reception, which can be determined by turning the equipment off and on, the user is encouraged to try to correct the interference
by one or more of the following measures:
• Reorient or relocate the receiving antenna.
• Increase the separation between the equipment and receiver.
• Connect the equipment into an outlet on a circuit different from that to which the receiver is connected.
Consult the dealer or an experienced radio/TV technician for help.Caution:
Any changes or modifications to this device not explicitly approved by manufacturer could void your authority to operate this equipment.
This device complies with part 15 of the FCC Rules. Operation is subject to the following two conditions:
(1)This device may not cause harmful interference, and (2) this device must accept any interference received, including interference that may cause undesired operation.

This equipment complies with FCC radiation exposure limits set forth for an uncontrolled environment.
This equipment should be installed and operated with minimum distance 20cm between the radiator and your body.
This transmitter must not be co-located or operating in conjunction with any other antenna or transmitter.

WARNING

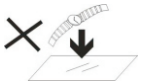

1. DO NOT place objects on top of the device, as objects may scratch the device.

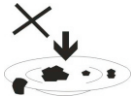

2. DO NOT expose the device to dirty or dusty environments.

3. DO NOT insert any foreign objects into the device.

4. DO NOT expose the device to strong magnetic or electrical field.

5. DO NOT use the device in the rain.

6. Please check with your Local Authority or retailer for proper disposal of electronic products.

7. DO NOT disassemble the device. Only a certified service technician should perform repair.

8. The device has apertures to disperse heat. DO NOT block the device ventilation, the device may become hot and malfunction as a result.

Illegal operation may cause personal injury, which could be fatal.
Illegal operation may cause damage to property.

FEATURES OF THE MACHINE

This system can be used with personal computers, mobile phone, DVD, VCD, CD, LD, TV, MP3, radio, electronic piano and any devices which have audio output.

Amplifier circuit are using high-performance, high-fidelity design, coupled with high-quality professional speaker, in order to make the sound field to get positioned so clear, distinct levels effect.

The sound system is outstanding, with deep and powerful bass and the treble effect is strong, with clear and bright pitch.

The professional electronic frequency division circuit enhances the machine's crossover point effect.

Using professional design and manufacture of high-capacity batteries, and dedicated audio power capacitors, to make the speaker's power reserve margin larger, more stable, better dynamics, higher signal to noise ratio.

FRONT PANEL FUNCTIONS

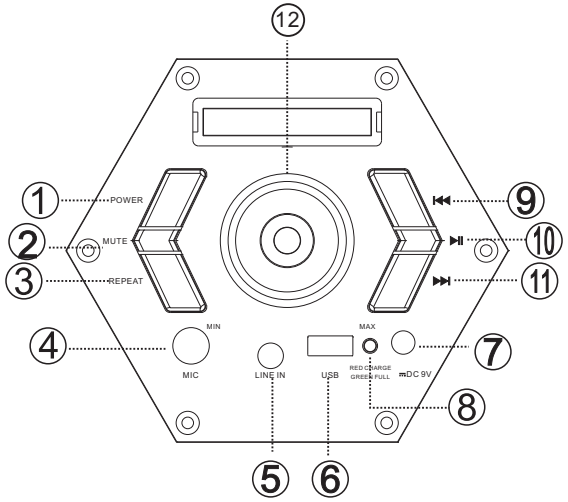

1. Short press for input selection (Line/FM/BT/USB), long press for power on/off
2. Mute button
3. Repeat song button
4. 6.5MM Wired microphone input jack
5. 3.5MM AUX input jack
6. USB slot
7. DC 9V adapter charge
8. Battery indicator, red light for charging, green light-full.
9. Last song for USB mode, last channel for FM mode
10. Play/stop on USB mode, Scan song on FM mode
11. Next song for USB mode, next channel for FM mode
12. Music volume and mic volume control knob

REMOTE CONTROL FUNCTIONS

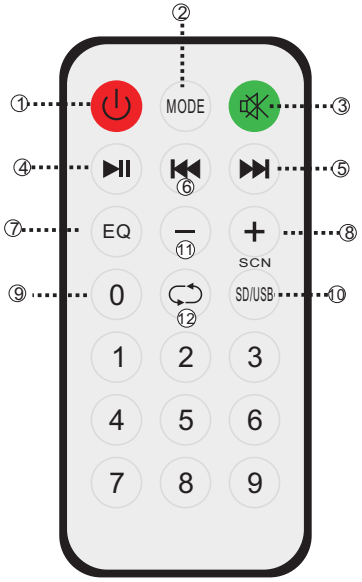

1. Standby button
2. Choose input signal
3. Mute button
4. Play/Stop button
5. Next song of USB/SD
6. Previous song of USB/SD
7. EQ solution
8. Increase speaker volume
9. Choose song number directly
10. Choose USB/SD signal directly
11. Decrease music volume
12. Repeat song