SIONYX

NIGHTWAVE™

SERIES CAMERAS

USER MANUAL

SIONYX, LLC
Cummings Center
Beverly, MA 01915
U.S.A.
(978) 922-0684
support@SIONYX.com

FOLLOW US

Share your SIONYX content and be sure to tag us!

NEED HELP?

ONLINE CHAT	www.sionyx.com
SUBMIT A TICKET	www.sionyx.com/contact
24/7 SUPPORT	www.support.sionyx.com
CALL	(866) 827-8237

Register your device and stay up to date by visiting the URL or scanning the QR code below.

SIONYX, LLC

NIGHTWAVE
Made in Taiwan
SIONYX.com/patents

TABLE OF CONTENTS

WELCOME TO NIGHTWAVE	02
GETTING STARTED	03
INSTALLATION	05
GETTING CONNECTED	14
CAMERA SETUP	17
SAFETY	18
MAINTENANCE	27
ADDITIONAL RESOURCES	28

WELCOME TO NIGHTWAVE

THIS IS SIONYX. We believe that human endeavor should not be limited by daylight. In the darkness of night, greatness is possible. Adventure enabled. And a full sense of all sight achievable, no matter the light.

BOX INCLUDES:

- NIGHTWAVE CAMERA
- ANALOG VIDEO CAMERA
- USB CABLE
- ALLEN WRENCH
- IN-LINE FUSE
- USB CABLE
- SMA TO BNC ADAPTER
- BNC TO RCA ADAPTER
- BASE GASKET
- MOUNTING SCREWS
- TEMPLATE

GETTING STARTED

To get started, please review the legends on the following pages.

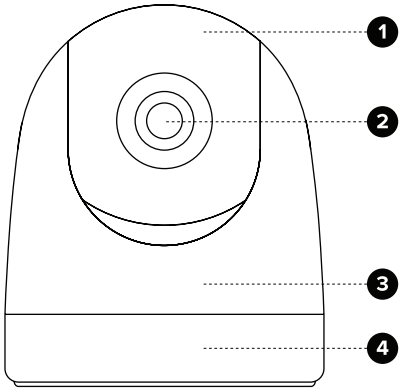

FRONT

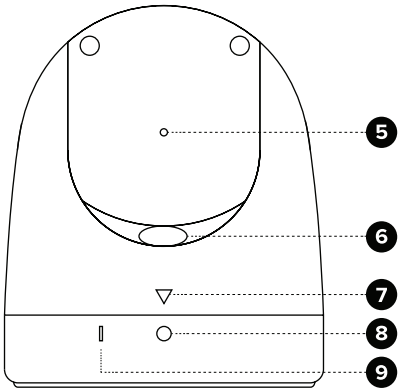

BACK

BASE PLATE

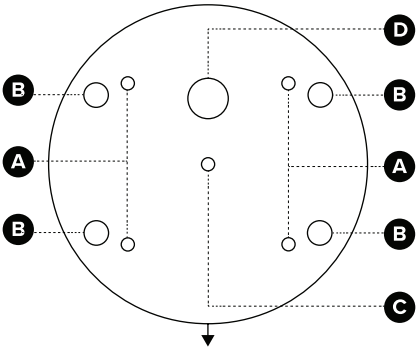

FRONT OF UNIT

PARTS LEGEND

1	PIVOTING HEAD
2	CAMERA OPTIC
3	MAIN HOUSING
4	BASE PLATE
5	STATUS LED
6	TILT LOCK
7	CENTER MARK
8	LOCKING SCREW
9	UNLOCK MARK
A	M6 THREADED
B	TOP DOWN THROUGH HOLES
C	1/4-20 TRIPOD MOUNT
D	CABLE HOLE

LED STATUS

ORANGE	BOOTING
BLUE	RUNNING
RED	FAULT

SEPARATE CAMERA FROM BASE PLATE

1 Loosen the ❽ LOCKING SCREW.

2 Rotate ❸ MAIN HOUSING until ❾ UNLOCK MARK is aligned with the ❼ CENTER MARK.

3 Separate the base plate from the camera. FIG.1

FIG.1

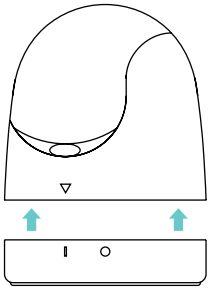

CONNECT CABLES

1 Separate camera from base plate.

2 Remove cable retainer with the included Allen wrench. FIG.2

3 Remove rubber gasket from cable. FIG.2B

4 Remove cable strain relief cover. FIG.2C

5 Remove connector protective cover. FIG.2D

6 Separate connectors & remove cable from housing.

7 Feed new cable through housing FIG.2A & install rubber gasket around it. FIG.2B

8 Mate connectors, lay them in position and install the protective cover.

9 Pull extra cable slack through housing FIG.2A & re-install cable retainer. FIG.2

10 Re-connect the base plate to the camera.

FIG.2

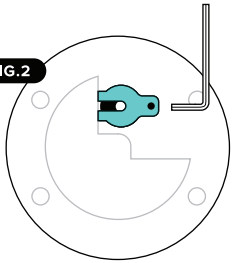

FIG.2B

FIG.2C

FIG.2D

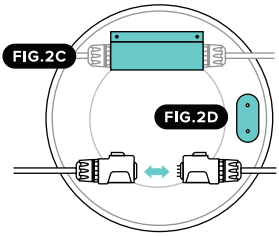

FIG.2A

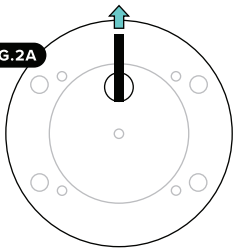

INSTALLATION

CAMERA MOUNTING: LOCATION

When planning the installation location, consider the following points:

- The camera is waterproof, and appropriate for above decks mounting.
- When mounting the camera in a ball-down position, ensure that the camera is installed with adequate drainage so that standing water does not collect in the base.
- Ensure the camera is installed in a location that will allow it to be accessed for regular periodic cleaning (fresh-water rinse), inspection of mounting point integrity and mechanical soundness, and preventative maintenance.
- The underside (inside) of the compartment or deck on to which the camera is mounted must be weather-tight. You must ensure protection from water ingress to cables and connections.
- The mounting surface must be horizontal.
- Fixings are supplied for a mounting surface up to X mm (X in) thick. A thicker surface will require the installer to provide alternative fixings.
- The camera should be mounted as high as practical, but without interfering with any radar, navigational or communications electronics.
- Choose a location that will provide the most unobstructed view in all directions.
- Select a location for the camera that is at least X m (X in.) from any magnetic compass.
- Select a location that is at least X m (X ft) from devices that may cause interference, such as motors, generators and radio transmitters / receivers.

INSTALLATION CHECKLIST

Installation includes the following activities:

- ☐ Plan your system.
- ☐ Obtain all required equipment and tools.
- ☐ Site all equipment.
- ☐ Route all cables.
- ☐ Drill cable and mounting holes.
- ☐ Make all connections into equipment.
- ☐ Secure all equipment in place.
- ☐ Power on and test the system.

MOUNTING THE CAMERA

Use these instructions to mount the camera unit in position.

Using the template supplied, mark and drill the holes for mounting the camera.

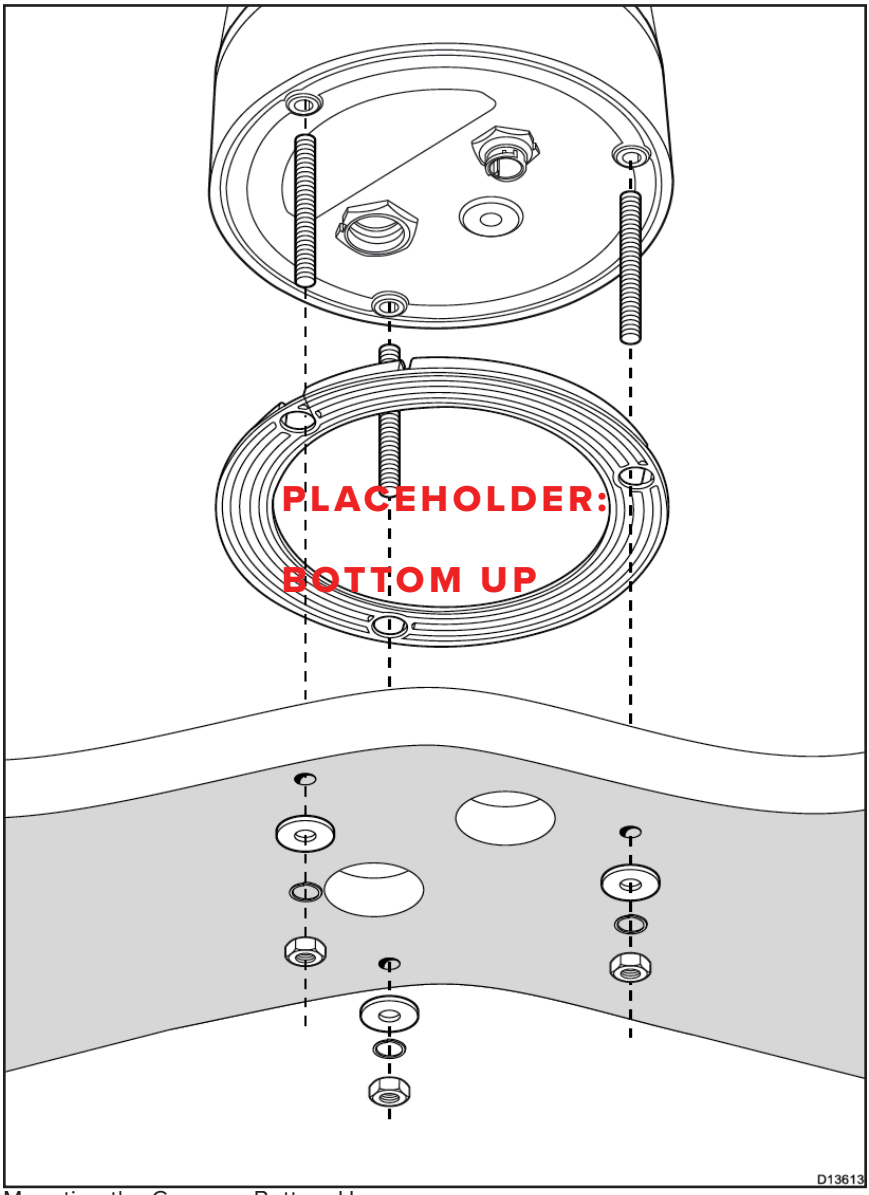

Mounting the Camera: Bottom Up

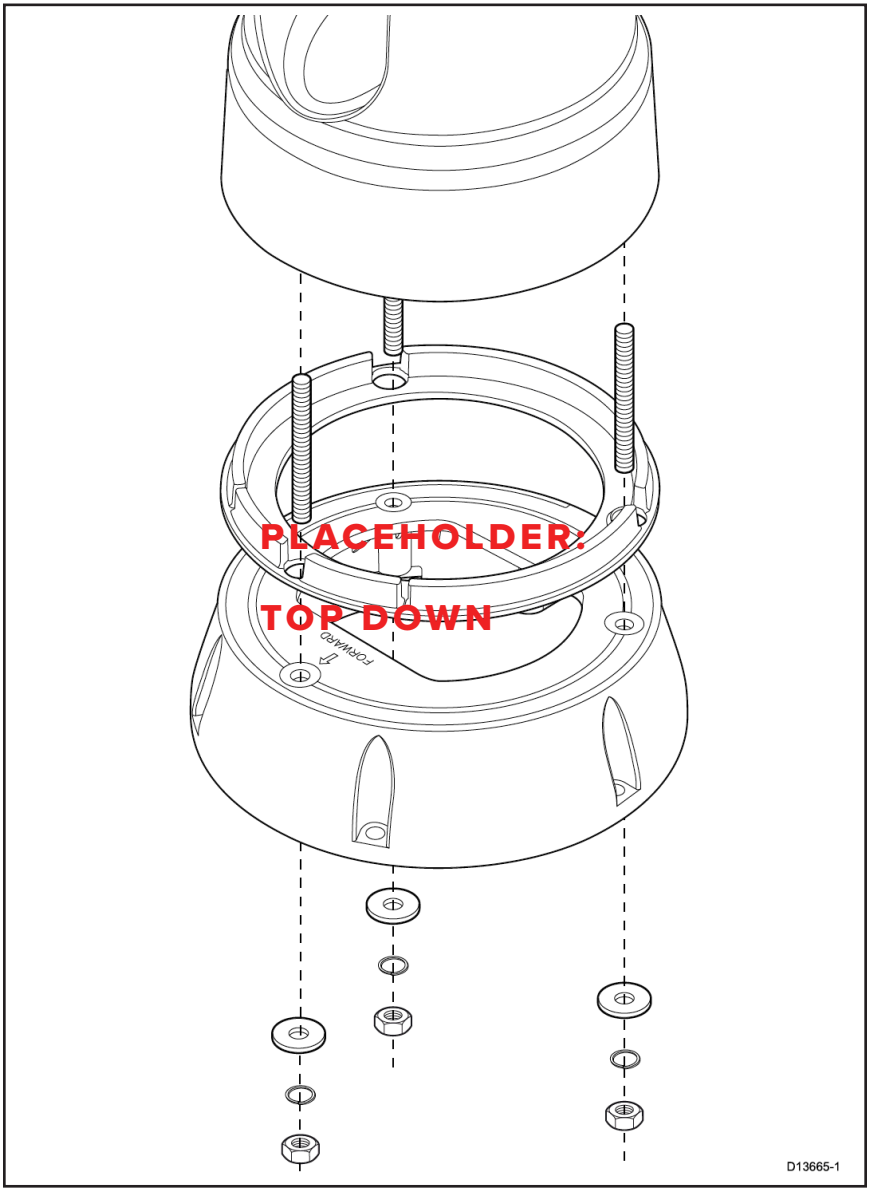

Mounting the Camera: Top Down

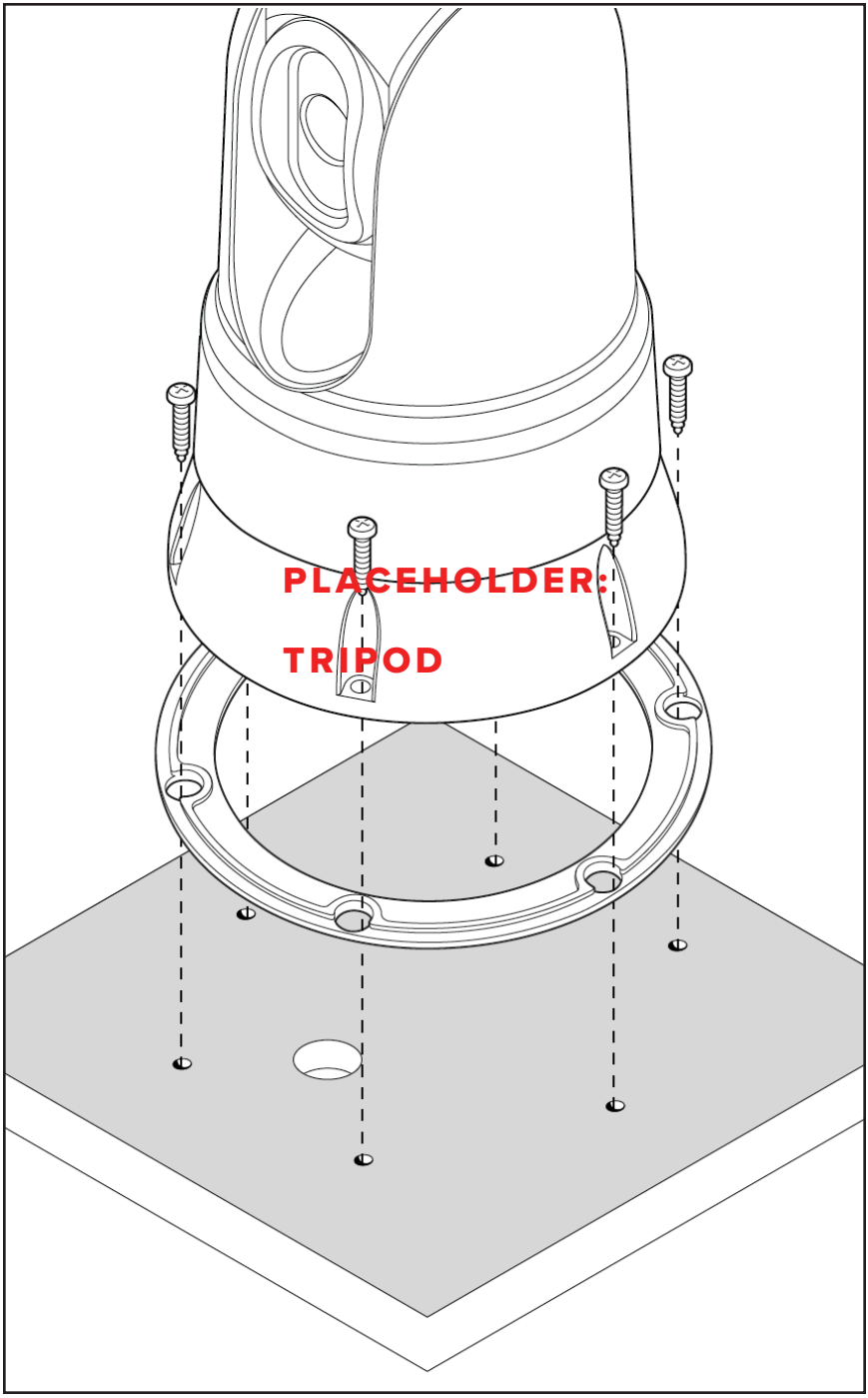
PLACEHOLDER:
TRIPOD

CAMERA ORIENTATION

The camera can be mounted in 2 orientations known as
“Ball up” and “Ball down.”

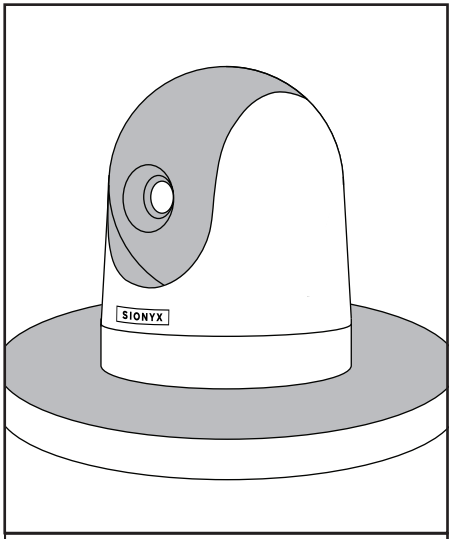

BALL-UP: The camera is mounted on top of the mounting surface.

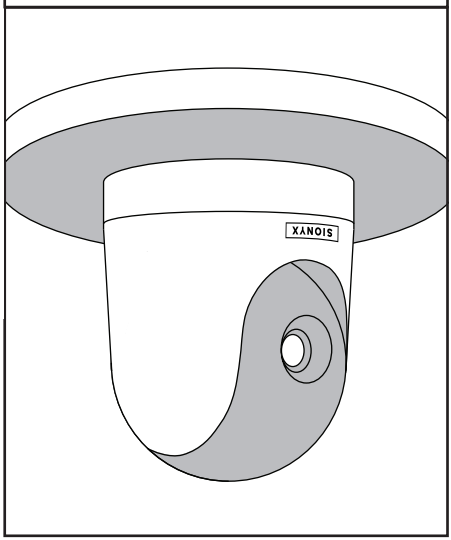

BALL-DOWN: The camera is suspended upside down, below the mounting surface.

The default video image orientation is for the ball-up configuration; if the camera is to be mounted in the ball-down configuration then the video image must be rotated.

GENERAL CABLING GUIDANCE

Cable Types and Length

- It is important to use cables of the appropriate type and length.
- Unless otherwise stated, only use cables supplied by SIONYX.
- Ensure that any non-SIONYX cables are of the correct quality and gauge. For example, longer power cable runs may require larger wire gauges to minimize voltage drop along the run.

Routing Cables

Cables must be routed correctly, to maximize performance and prolong cable life.

- Do NOT bend cables excessively. Wherever possible, ensure a minimum bend diameter of 200 mm (8 in) / minimum bend radius of 100 mm (4 in).

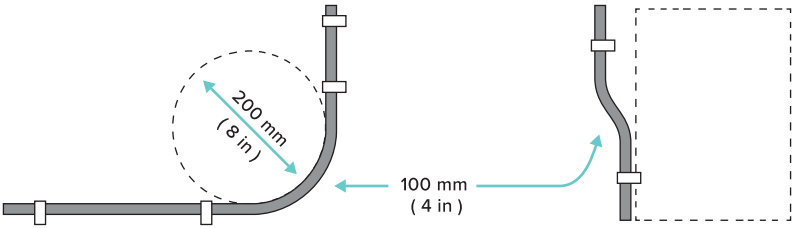

- Protect all cables from physical damage and exposure to heat. Use trunking or conduit where possible. Do NOT run cables through bilges or doorways, or close to moving or hot objects.
- Secure cables in place using tie-wraps or lacing twine. Coil any extra cable and tie it out of the way.
- Where a cable passes through an exposed bulkhead or deckhead, use a suitable watertight feed- through.
- Do NOT run cables near engines or fluorescent lights.
- Always route data cables as far away as possible from other equipment and cables, high current carrying AC and DC power lines, and antennas.

Strain Relief

Ensure adequate strain relief is provided. Protect connectors from strain and ensure they will not pull out under extreme sea conditions.

Circuit Isolation

Appropriate circuit isolation is required for installations using both AC and DC current:

- Always use isolating transformers or a separate power-inverter to run PC's, processors,displays and other sensitive electronic instruments or devices.
- Always use an isolating transformer with Weather FAX audio cables.
- Always use an isolated power supply when using a 3rd party audio amplifier.
- Always use an RS232/NMEA converter with optical isolation on the signal lines.
- Always make sure that PC's or other sensitive electronic devices have a dedicated power circuit.

VERSATILE MOUNTING INSTALLATION

LOCATION REQUIREMENTS

When planning the installation location, consider the following points:

- The camera is water-resistant, and appropriate for above decks mounting.
- When mounting the camera in a ball-down position, ensure that the camera is installed with adequate drainage so that standing water does not collect in the base.
- Ensure the camera is installed in a location that will allow it to be accessed for regular periodic cleaning (fresh-water rinse), inspection of mounting point integrity and mechanical soundness, and preventative maintenance.
- The underside (inside) of the compartment or deck on to which the camera is mounted must be weather-tight. You must ensure protection from water ingress to cables and connections.
- The mounting surface must be horizontal.
- The camera should be mounted as high as practical, but without interfering with any radar, navigational or communications electronics.
- Choose a location that will provide the most unobstructed view in all directions.
- Choose a location as close to the vessel's center line as possible. This provides a symmetrical view when looking forward or aft.
- Select a location for the camera that is at least 1 m (39.4 in.) from any magnetic compass.
- Select a location that is at least 1 m (3 ft) from devices that may cause interference, such as motors, generators and radio transmitters / receivers.
- If installing an optional JCU, select a location for the JCU that is at least 1 m (39.4 in.) from any magnetic compass.

GETTING CONNECTED

CONNECT TO POWER

Follow marine electrical standards when wiring the camera.

Must apply power output with < 100W DC power equipment.

1. Determine that proper voltage levels are available. (12V DC)
2. Finalize cable installation.
3. Install in-line fuse. VII
4. Connect power wires to corresponding positive and negative power terminals. II + III
5. If using USB-A connecter instead, see DIAGRAM 2

CONNECT TO VIDEO

1. Locate the video input on your display.
2. Install appropriate adapter if necessary. FIG.4 DIAGRAM 1
3. Connect Analog video output DIAGRAM 1 to Analog video input of your display.
4. If using USB-A connector instead, see DIAGRAM 2

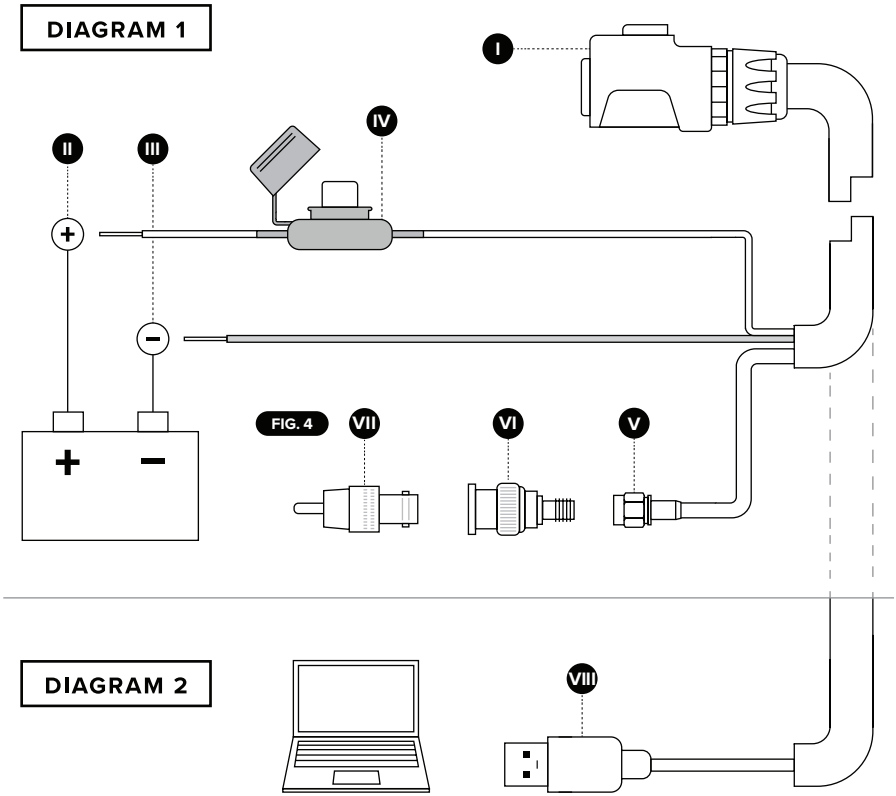

I	WATERPROOF CONNECTOR ON CAMERA END
II	+12V TERMINAL
III	GROUND TERMINAL
IV	IN-LINE FUSE HOLDER + FUSE
V	SMA VIDEO CONNECTION
VI	SMA TO BNC ADAPTER (USE IF NECESSARY)
VII	BNC TO RCA ADAPTER (USE IF NECESSARY)
VIII	USB-A POWER + VIDEO CONNECTION

Prior to installing Nightwave, please consider the following:

- Select an installation location as high as practical with minimum obstructions.
- Select an installation location that is greater than 1m from any magnetic compass.
- Select an installation location that is greater than 1m from any source of EMI (electromagnetic interference; radio, generators, motors, radar).
- The mounting surface must be horizontal and level.
- Ensure the camera installation hardware does not weaken the boat's structure.
- Choose a drill size appropriate for the installation surface material and types of fasteners.
- Ensure there are no hidden structures, wires or conduits beneath the install area that may be damaged by the installation hardware.
- Ensure cable length and routing is adequate for installation location interference. (Radio, generators, motors, radar)

CAMERA SETUP

ADJUST THE TILT

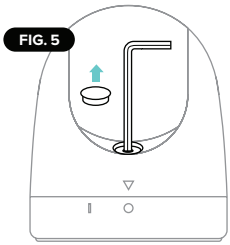

1 Remove protective rubber cap and loosen the ❻ TILT LOCK SET SCREW. FIG.5

2 Set the angle by manually adjusting the pivoting head of the camera, forward and back.

3 Gently tighten the set screw and replace the rubber protective cap.

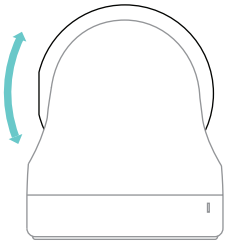

SAFETY

IMPORTANT PRODUCT AND SAFETY INSTRUCTIONS

By using this product, you acknowledge that you have read and agree with this 'Product and Safety Instructions' document and Privacy Policy (www.sionyx.com/privacy-policy.html). For more detailed information about camera features and settings, download the user manual online at www.sionyx.com.

Read this guide for important safety and health information for the product that you purchased.

WARNING

Failure to properly set up, use, and care for this product can increase the risk of serious injury, death, property damage, or damage to the product or related accessories. Exercise caution when using SIONYX products as part of your active lifestyle. Always be aware of your surroundings to avoid injury to yourself and others.

1. Read, keep, and follow these instructions.
2. Heed all warnings.
3. Protect the power cord from being walked on or pinched particularly at plugs, convenience receptacles, and the point where they exit from the apparatus.
4. Only use attachments and accessories specified by SIONYX.
5. Unplug this apparatus during lightning storms or when unused for long periods of time.
6. Refer all servicing to qualified services personnel. Servicing is required when the apparatus has been damaged in any way, such as when the plug is damaged, liquid has been spilled or objects have fallen into the apparatus, or the apparatus does not operate normally or has been dropped.

WARNING

Failure to take the following precautions can result in serious injury or death from electric shock, fire, or damage to your SIONYX camera or powered accessories:

- Do not drop, disassemble, open, crush, bend, deform, puncture, shred, microwave, incinerate or paint the camera or powered accessories.
- Do not insert foreign objects into any opening on the camera.
- Do not use the camera if it has been damaged—for example, if cracked, punctured or harmed by water.
- Do not dry the camera with an external heat source such as a microwave oven or hair dryer.
- Do not place naked flame sources, such as lighted candles, on or near the product.

WARNING

Failure to take the following precautions can result in serious injury or death from electric shock, fire, or damage to your SIONYX camera or powered accessories:

- Do not drop, disassemble, open, crush, bend, deform, puncture, shred, microwave, incinerate or paint the camera or powered accessories.
- Do not insert foreign objects into any opening on the camera, such as the USB port.
- Do not use the camera if it has been damaged—for example, if cracked, punctured or harmed by water. Disassembling or puncturing the battery (whether integrated or removable) can cause an explosion or fire.
- Do not dry the camera with an external heat source such as a microwave oven or hair dryer.
- Do not place naked flame sources, such as lighted candles, on or near the product.
- When charging the camera, do not handle the plug or charger with wet hands. Failure to observe this precaution could result in electric shock.

- Using a wall charger other than a SIONYX-approved wall charger can damage the Aurora camera battery and could result in fire or leakage. Use this product only with an agency approved power supply which meets local regulatory requirements (e.g., UL, CSA, VDE, CCC).
- The temperature icon and a message appear on the camera status screen when the camera becomes too hot and needs to cool down. Simply let it sit and cool before attempting to use it again. Do not expose products containing batteries to excessive heat (e.g. from storage in direct sunlight, fire or the like).

CAUTION

Radio frequency emissions from electronic equipment can negatively affect the operation of other electronic equipment, causing it to malfunction. The wireless transmitters and electrical circuits in your product may cause interference in other electronic equipment. When using SIONYX products near another device, read that device's user guide for any safety instructions. Power your camera off whenever it is forbidden to use it or when it may cause interference.

NOTICES

Avoid exposing your camera or battery to very cold or very hot temperatures. Low or high temperature conditions may shorten the battery life or cause the camera to temporarily stop working properly. The microphones in your camera are designed to provide optimal audio capture in a variety of environments. When Wi-Fi is on, microphones may detect and capture low-level noises. To prevent this noise, turn off Wi-Fi when recording. Abide by all local laws when using your SIONYX Aurora and related mounts and accessories, including all privacy laws, which may restrict recording in certain areas.

IC REGULATIONS

This device complies with Industry Canada license-exempt RSS standards. Operation is subject to the following two conditions: (1) This device may not cause interference and; (2) This device must accept any interference–including interference that may cause undesired operation of the device. This Class B digital apparatus complies with Canadian ICES-003.

FCC STATEMENT

This device complies with Part 15 of the FCC Rules. Operation is subject to the following two conditions: (1) This device may not cause harmful interference; and (2) This device must accept any interference received, including interference that may cause undesired operation.

WARNING: Changes or modifications to this unit not expressly approved by the party responsible for compliance could void the user's authority to operate the equipment.

NOTE: This equipment has been tested and found to comply with the limits for a Class B digital device, pursuant to part 15 of the FCC Rules. These limits are designed to provide reasonable protection against harmful interference in a residential installation.

This equipment generates, uses and can radiate radio frequency energy and, if not installed and used in accordance with the instructions, may cause harmful interference to radio communications. However, there is no guarantee that interference will not occur in a particular installation.

If this equipment does cause harmful interference to radio or television reception, which can be determined by turning the equipment off and on, the user is encouraged to try to correct the interference by one or more of the following measures:

- Reorient or relocate the receiving antenna.
- Increase the separation between the equipment and the receiver.
- Connect the equipment into an outlet on a circuit different from that to which the receiver is connected.
- Consult the dealer or an experienced radio/TV technician for help.

DISPOSAL

Electronics donation and recycling is a great way to help conserve resources and natural materials. It is important to make sure you are donating and/or recycling electronics safely and correctly.

The Waste Electrical and Electronic Equipment (WEEE) Directive requires the recycling of waste electrical and electronic equipment which contains materials, components and substances that may be hazardous and present a risk to human health and the environment when WEEE is not handled correctly.

Equipment marked with the crossed-out wheeled bin symbol indicates that the equipment should not be disposed of in unsorted household waste.

Local authorities in many regions have established collection schemes under which residents can dispose of waste electrical and electronic equipment at a recycling center or other collection point.

IMPORTANT PRODUCT & SAFETY INSTRUCTIONS

The use of this product is an acknowledgment and agreement to all the product instruction, safety warnings, private policy and other pertaining documentation outlined or reference in this document.

THIS DOCUMENT CONTAINS IMPORTANT SAFETY AND HEALTH INFORMATION THAT MUST BE READ BEFORE USE.

WARNING

Failure to properly set up, use, and care for this product can increase the risk of serious injury, death, property damage, or damage to the product or related accessories. Exercise caution when using a SIONYX product as part of your active lifestyle. Always be aware of your surroundings to avoid injury to yourself and others.

1. Product shall be used in accordance with all manufacturing instruction and limits.
2. Read all provided documentation, and keep it for future reference.
3. Follow all instructions and heed all warnings.
4. Properly install, use, and maintain all power and data cable as per manufacturing specification.
5. Only use attachments and accessories specified and/or approved by SIONYX.
6. SIONYX Nightwave is designed to be serviced only by qualified service personal. Visit SIONYX.com for more information.

Hereby, SIONYX, LLC declares that the radio equipment type SIONYX Nightwave is in compliance with Directive 2014/53/EU. Visit WWW.SIONYX.com/support for full documentation and company contact information

IC REGULATIONS

This device complies with Industry Canada license-exempt RSS standards. Operation is subject to the following two conditions: (1) This device may not cause interference and; (2) This device must accept any interference–including interference that may cause undesired operation of the device. This Class B digital apparatus complies with Canadian ICES-003.

L'émetteur/récepteur exempt de licence contenu dans le présent appareil est conforme aux CNR d'Innovation, Sciences et Développement économique Canada applicables aux appareils radio exempts de licence. L'exploitation est autorisée aux deux conditions suivantes: (1) L'appareil ne doit pas produire de brouillage; (2) L'appareil doit accepter tout brouillage radioélectrique subi, même si le brouillage est susceptible d'en compromettre le fonctionnement.

RF EXPOSURE WARNING

The equipment complies with RF exposure limits set forth for an uncontrolled environment. The antenna(s) used for this transmitter must not be co-located or operating in conjunction with any other antenna or transmitter.

Avertissement d'exposition RF: *L'équipement est conforme aux limites d'exposition aux RF établies pour un incontrôlés environnement. L'antenne (s) utilisée pour ce transmetteur ne doit pas être co-localisés ou fonctionner en conjonction avec toute autre antenne ou transmetteur.*

CAUTION

Radio frequency emissions from electronic equipment can negatively affect the operation of other electronic equipment, particularly marine radio and navigation equipment causing it to malfunction. The wireless transmitters and electrical circuits in your product may cause interference in other electronic equipment. When using SIONYX products near another device, read that device's user guide for any safety instructions. Power your camera off whenever it is forbidden to use it or when it may cause interference.

FCC STATEMENT

This device complies with Part 15 of the FCC Rules. Operation is subject to the following two conditions: (1) This device may not cause harmful interference; and (2) This device must accept any interference received, including interference that may cause undesired operation.

WARNING

Failure to take the following precautions can result in serious injury or death from electric shock, fire, or damage to your SIONYX camera or powered accessories:

- Do not drop, disassemble, open, crush, bend, deform, puncture, shred, microwave, incinerate or paint the camera or powered accessories.
- Do not insert foreign objects into any opening on the camera.
- Do not use the camera if it has been damaged in any way.
- Do not dry the camera with an external heat source such as a microwave oven or hair dryer.
- Do not place open flame sources, such as lighted candles, on or near the product.
- Should the glass lens cover break, care should be taken to avoid injury.
- Keep out of reach of children.
- Contact SIONYX Customer Support at www.SIONYX.com/support

WARNING

Changes or modifications to this unit not expressly approved by the party responsible for compliance could void the user's authority to operate the equipment.

NOTE

This equipment has been tested and found to comply with the limits for a Class B digital device, pursuant to part 15 of the FCC Rules. These limits are designed to provide reasonable protection against harmful interference in a residential installation.

This equipment generates, uses, and can radiate radio frequency energy and, if not installed and used in accordance with the instructions, may cause harmful interference to radio communications. However, there is no guarantee that interference will not occur in a particular installation. If this equipment does cause harmful interference to radio or television reception, which can be determined by turning the equipment off and on, the user is encouraged to try to correct the interference by one or more of the following measures:

- Reorient or relocate the receiving antenna.
- Increase the separation between the equipment and the receiver.
- Connect the equipment into a branch circuit different from that to which the receiver is connected.
- Consult an experienced marine radio/electronics technician for help.

The provided power and data cables must be used with this unit to ensure compliance with the class B FCC limits.

IMPORTANT NOTE: FCC Radiation Exposure Statement

This equipment complies with FCC radiation exposure limits set forth for an uncontrolled environment. End users must follow the specific operating instructions for satisfying RF exposure compliance.

This transmitter must not be co-located or operating in conjunction with any other antenna or transmitter.

NOTICES

Extreme low or high temperature conditions may temporarily prevent the camera working properly, for example if the camera is covered in ice, or if the camera's internal high temperature limit is exceeded. Abide by all local laws and maritime safety requirements when using your SIONYX Nightwave and related mounts and accessories, including all privacy laws, which may restrict recording in certain areas.

COMPASS SAFE DISTANCE

SIONYX Nightwave devices output Electromagnetic Interference (EMI) that can cause inaccurate readings on a nearby compass. Mounting the chartplotter far enough from the compass will prevent compass inaccuracy due to EMI.

The SIONYX Nightwave has a Compass Safe Distance found in the installation manual. Measure the distance from the center of the compass to the closest edge of the Nightwave.

For full regulatory and safety information and instructions visit www.SIONYX.com/support.

MAINTENANCE

The camera housing and lens will require occasional cleaning. You should clean the lens when image quality degradation is noticed or excessive contaminant build up is seen.

Clean the interface between the yoke and base often to prevent accumulation of debris or salt deposits.

- Do NOT wipe the lens window with a dry cloth, or with abrasive materials such as paper or scrub brushes, as this could scratch the coating.
- Do NOT use acid or ammonia based products.
- Do NOT pressure wash.

Particular care should be taken when cleaning the lens window, this has a protective anti-reflective coating which may be damaged by improper cleaning.

- Switch off the power to the unit.
- Clean the camera body with a clean, soft cotton cloth. You can moisten the cloth and use a mild detergent if required.

Clean the camera lens.

- Rinse the lens with fresh water to remove all dirt particles and salt deposits, and allow to dry naturally.
- If any spots or smears remain, very gently wipe the lens window with a clean micro fiber cloth or soft cotton cloth.
- If necessary, use isopropyl alcohol or a mild detergent to remove any remaining spots or marks.

ADDITIONAL RESOURCES

INSTALLATION TEMPLATE

Click here to download the Nightwave installaton Template or visit www.sionyx.com/nightwave-installation-template.

WARRANTY

Click here for full product warranty or visit www.sionyx.com/nightwavewarranty.

DECLARATION OF CONFORMITY

Click here for full declaration of conformity or visit www.sionyx.com/nightwave-declaration.

SIONYX

Cummings Center
Beverly, MA 01915