STARVR®

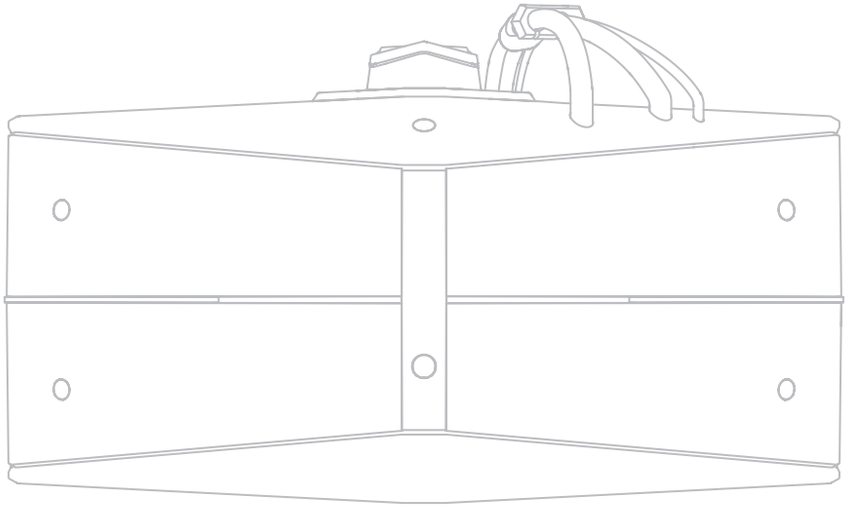

HEAD MOUNTED DISPLAY QUICK GUIDE

GUIDE RAPIDE DE L'AFFICHAGE PORTÉ SUR LA TÊTE / GUIDA RAPIDA DELLO SCHERMO MONTATO SULLA TESTA (HMD)
HEAD MOUNTED DISPLAY KURZANLEITUNG / GUÍA RÁPIDA DEL PANTALLA DEL CASCO DE REALIDAD VIRTUAL
ヘッド マウント ディスプレイ クイック ガイド / 머리 착용 디스플레이 빠른 시작 설명서
頭戴式顯示器快速指南 / 头戴式显示器快速指南

WHAT’S IN THE BOX?

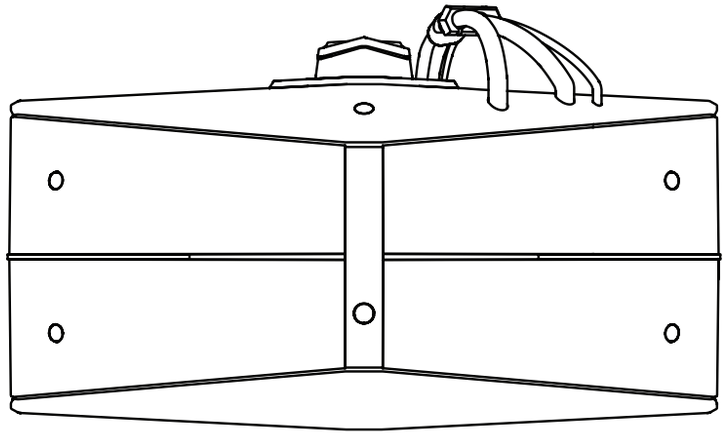

HMD

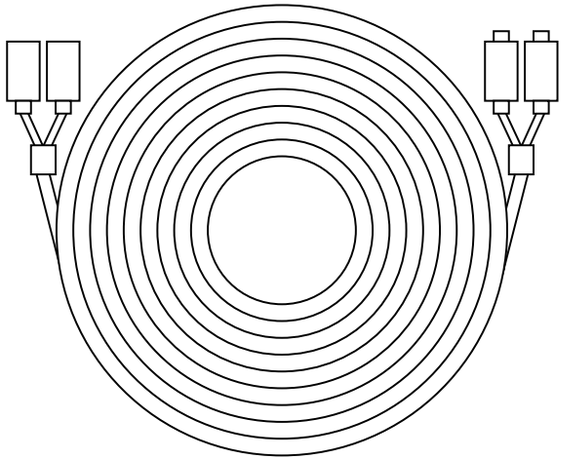

5m Type-C Cable

2 x 0.5m DP Cable

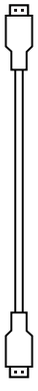

2 x 0.5m
USB Type-A Cable

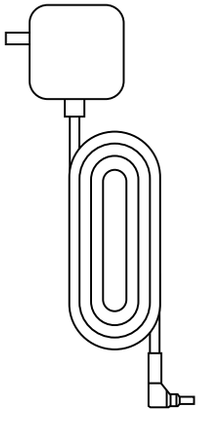

1 x Power Adapter
(ADP-45FE F)

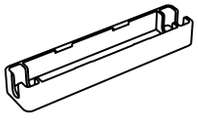

2 x Secure Cable Holder

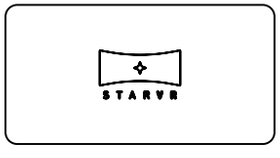

Cable Adapter

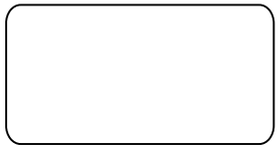

Cable Adapter Anti-Slip Mat

EN

CONNECTING THE HMD - STEP 1

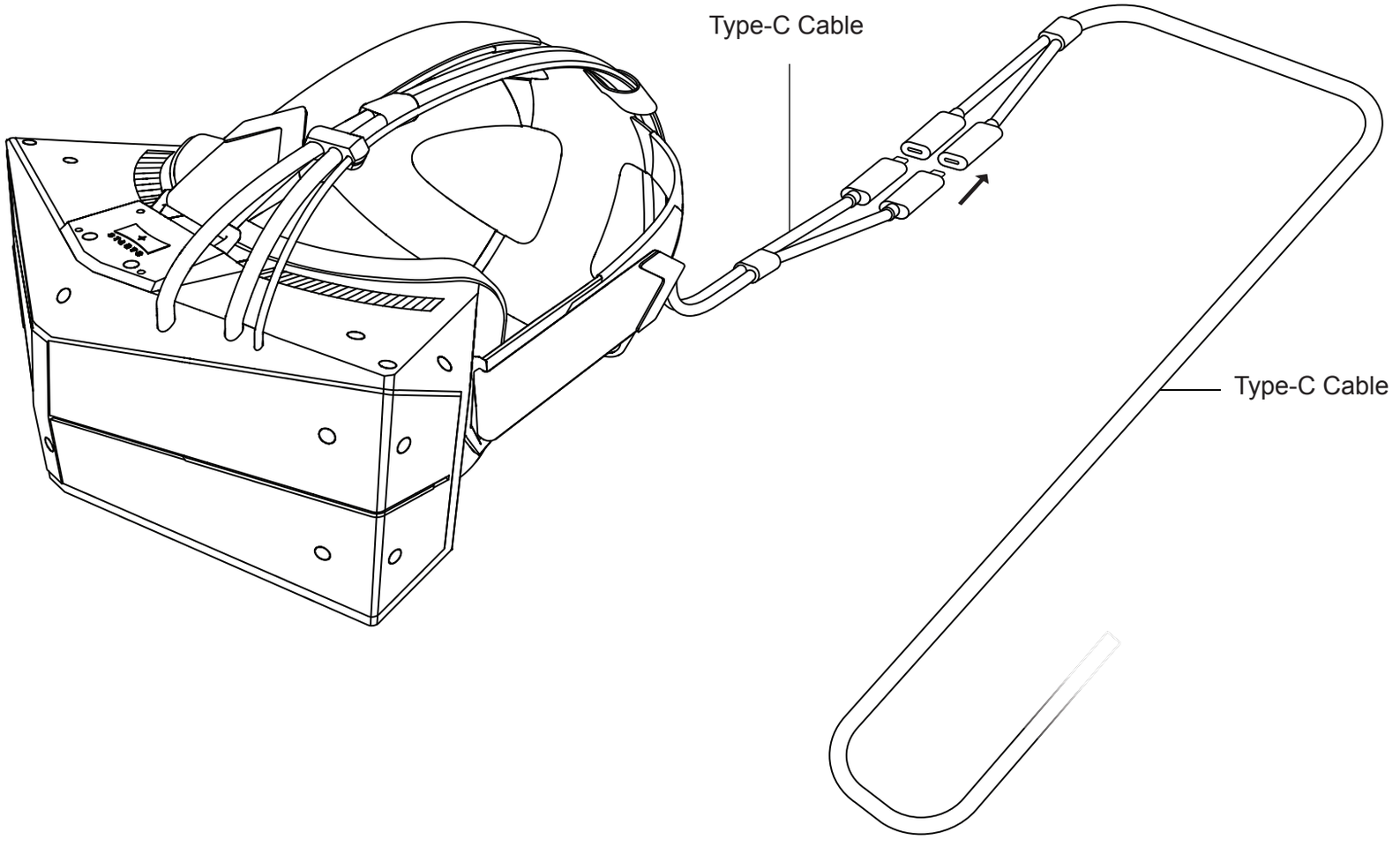

CONNECTING THE HMD - STEP 2

EN

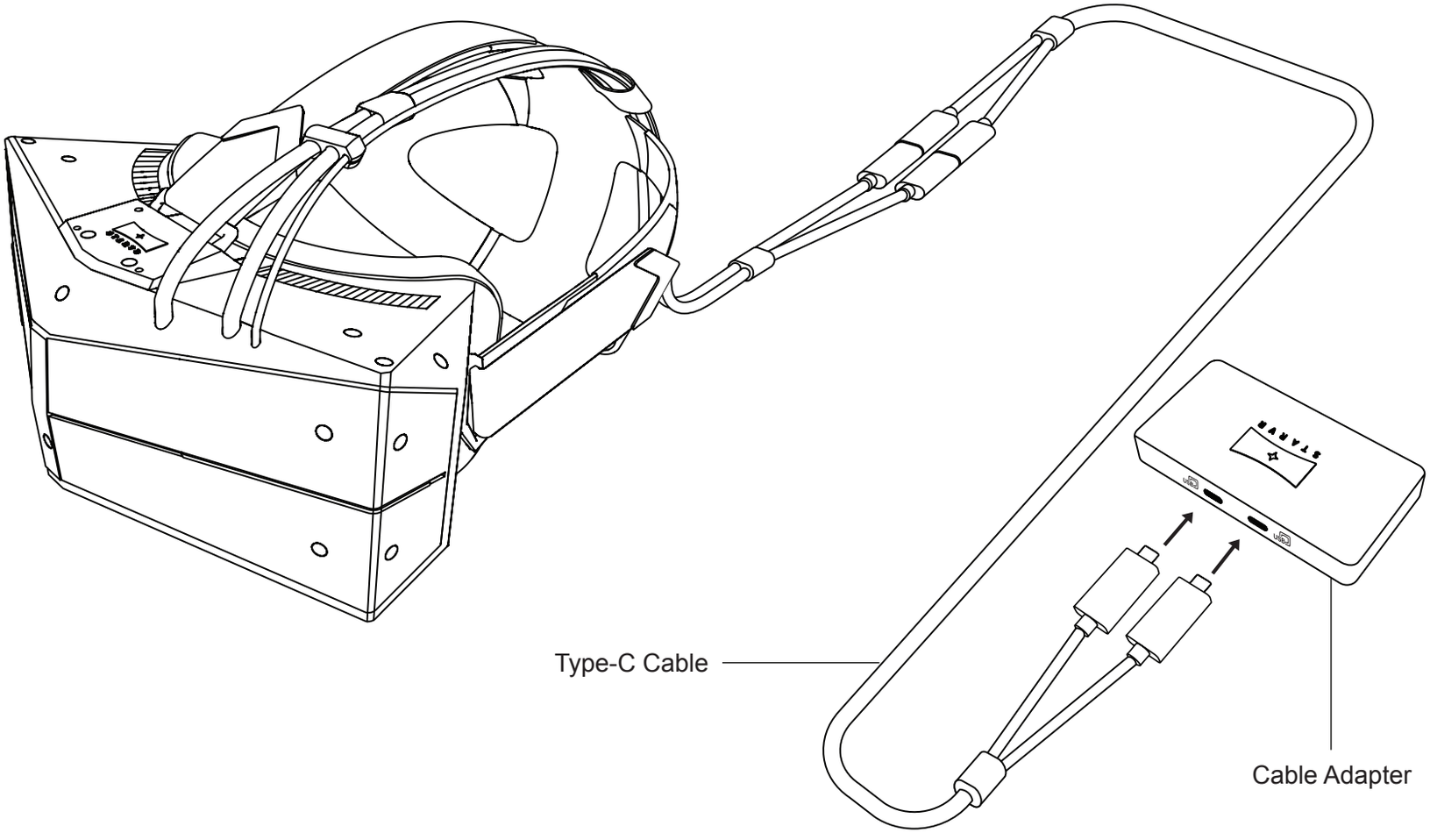

EN

SECURING THE CABLE CONNECTOR

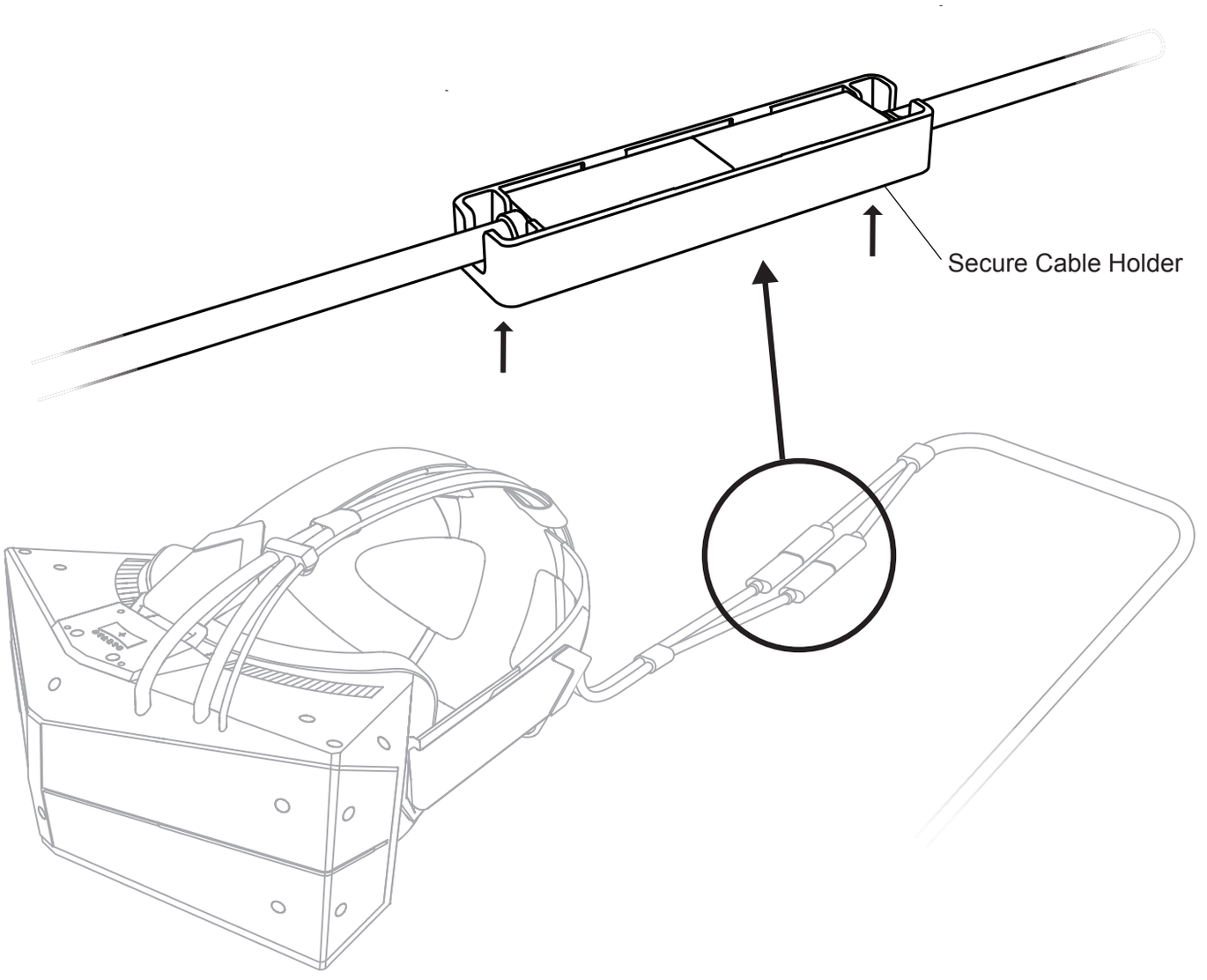

CONNECTING THE HMD - STEP 3

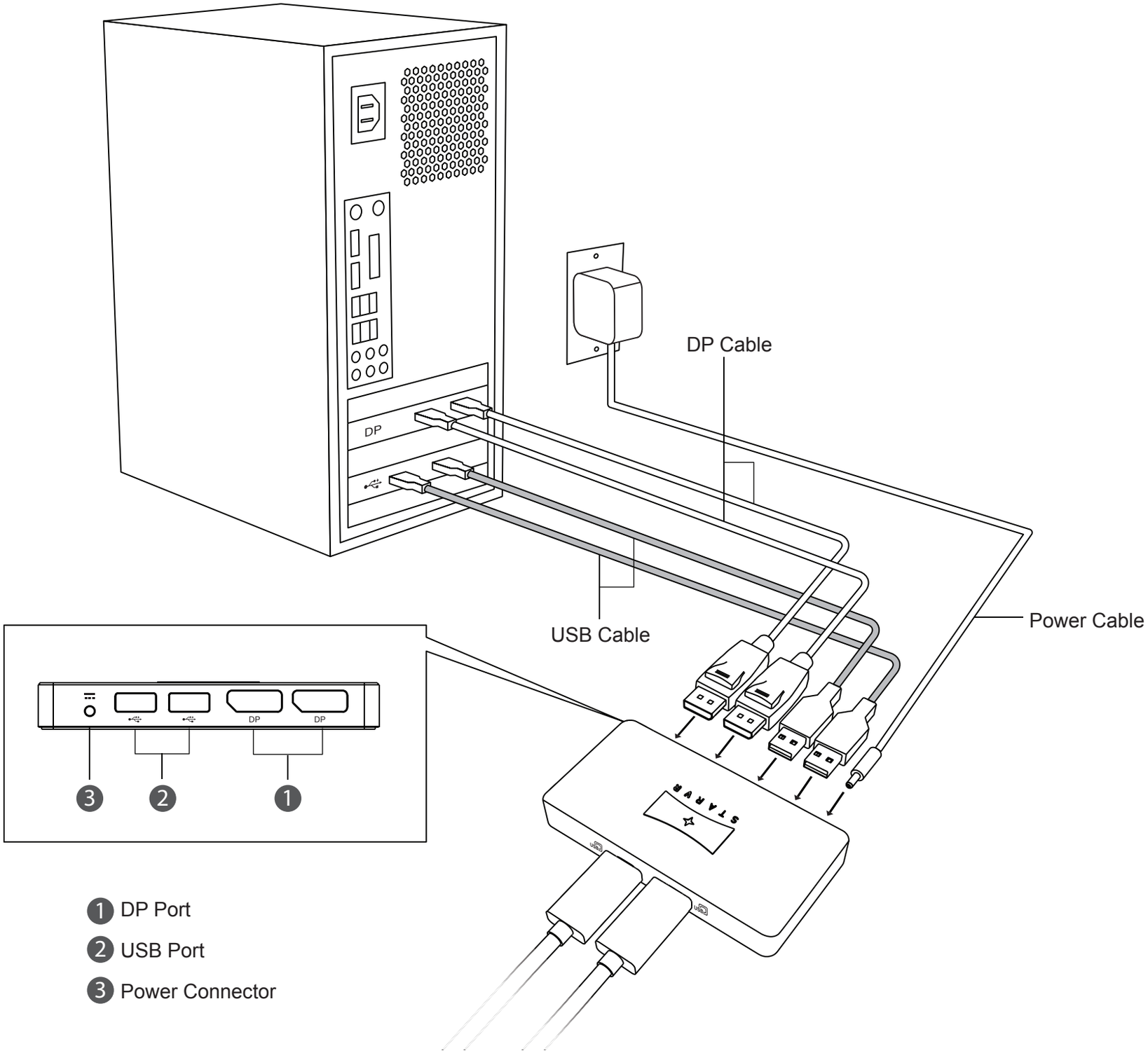

EN

CONNECTING THE HEADPHONE

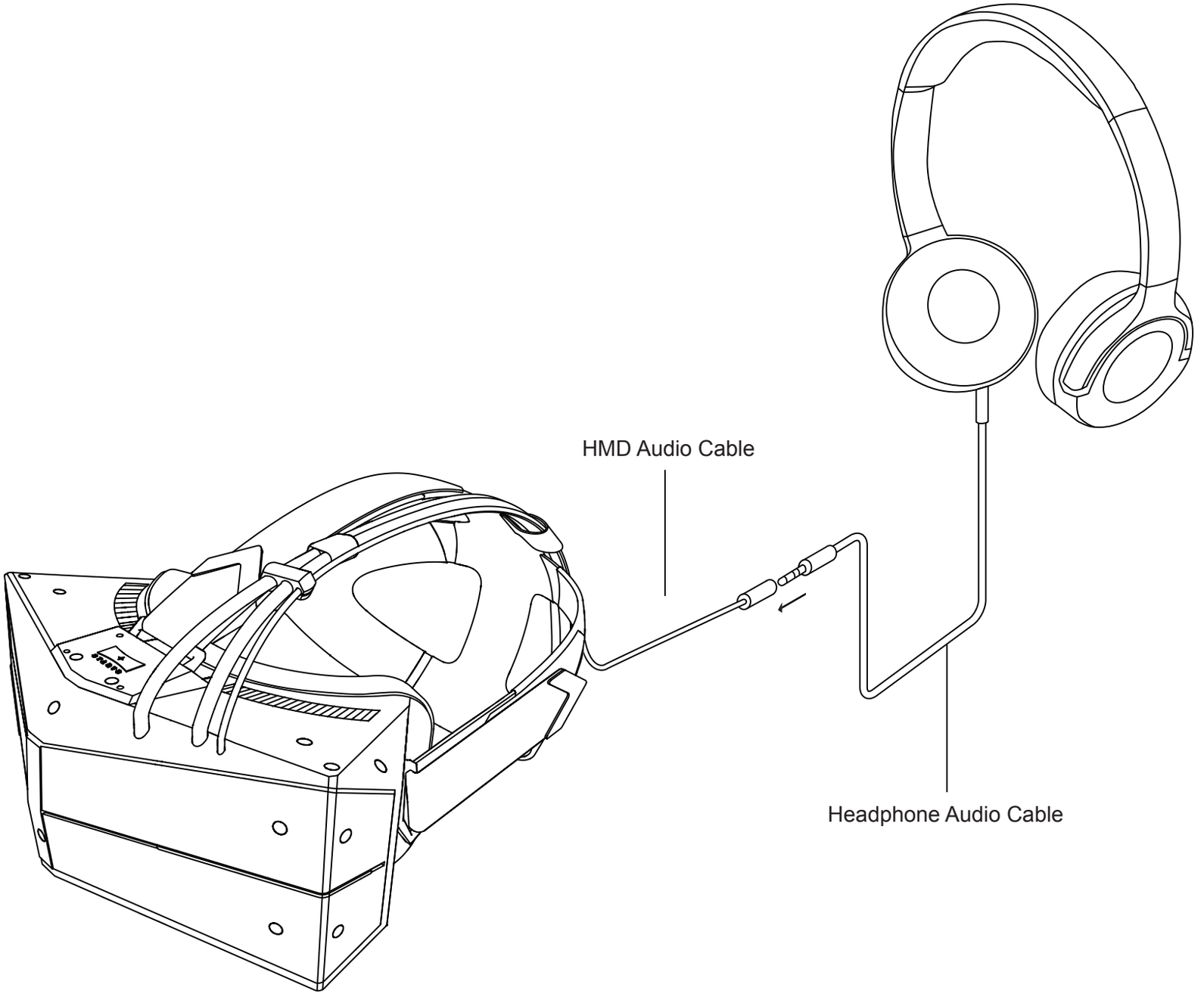

APPLYING CABLE ADAPTER ANTI-SLIP MAT

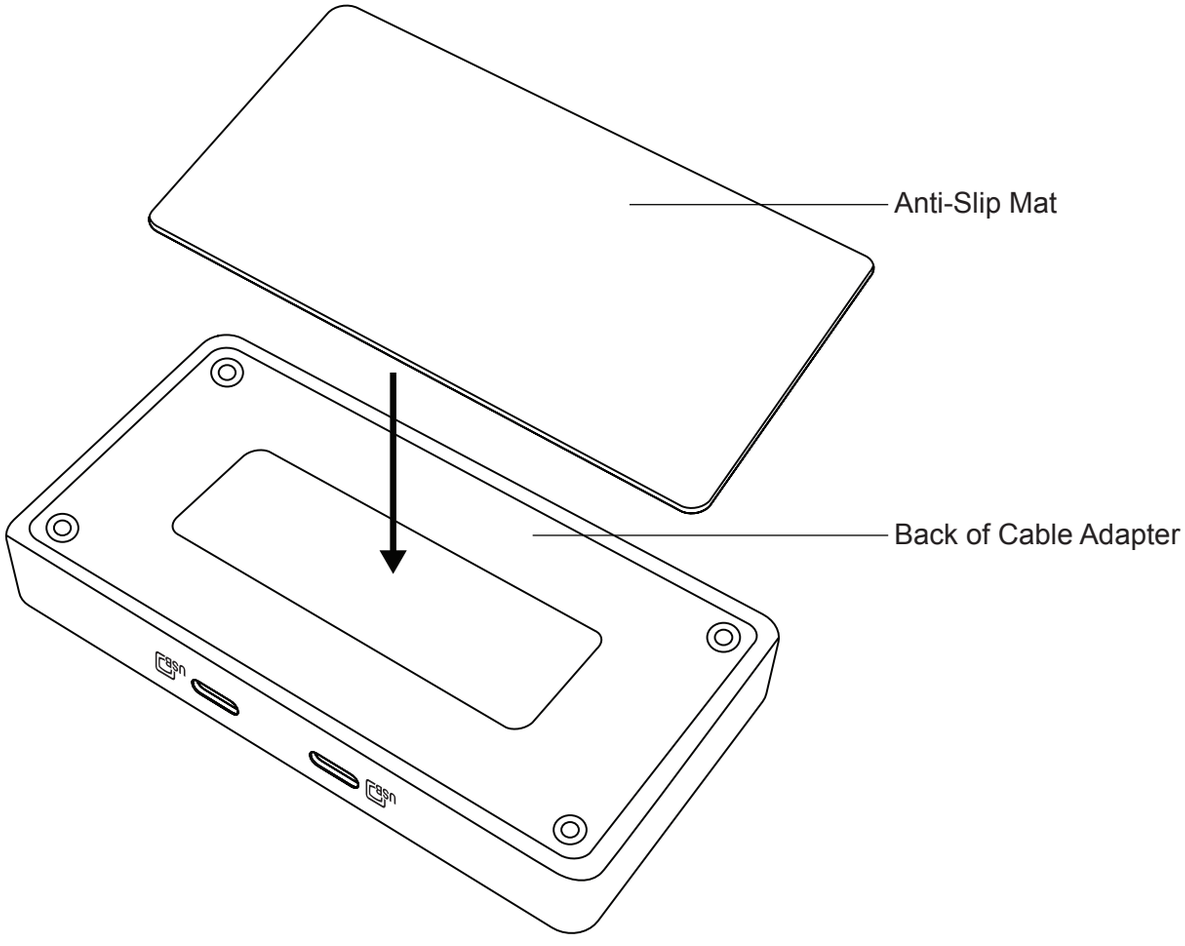

Radio Frequency Interference

Warning

For safety reasons, turn off all wireless or radio transmitting devices when using your laptop under the following conditions. These devices may include, but are not limited to: wireless LAN (WLAN), Bluetooth and/or cellular.

The wireless adapter, like other radio devices, emits radio frequency electromagnetic energy. The level of energy emitted by the wireless adapter, however, is less than the electromagnetic energy emitted by other wireless devices such as mobile phones. The wireless adapter operates within the guidelines found in radio frequency safety standards and recommendations. These standards and recommendations reflect the consensus of the scientific community and result from deliberations of panels and committees of scientists who continually review and interpret the extensive research literature.

In some situations or environments, the use of the wireless adapter may be restricted by the proprietor of the building or responsible representatives of the applicable organization. Examples of such situations may include:

• Using the wireless adapter on board airplanes, or

• Using the wireless adapter in any other environment where the risk of interference with other devices or services is perceived or identified as being harmful.

If you are uncertain of the policy that applies to the use of wireless adapters in a specific organization or environment (an airport, for example), you are encouraged to ask for authorization to use the adapter before you turn it on.

USA — Federal Communications Commission (FCC)

The radiated output power of the adapter is far below the FCC radio

frequency exposure limits. Nevertheless, the adapter should be used in such a manner that the potential for human contact during normal operation is minimized. To avoid the possibility of exceeding the FCC radio frequency exposure limits, you should keep a distance of at least 20 cm between you (or any other person in the vicinity), or the minimum separation distance as specified by the FCC grant conditions, and the antenna that is built into the computer. Details of the authorized configurations can be found at www.fcc.gov/oet/ea/ by entering the FCC ID number on the device.

USA — FCC and FAA

The FCC with its action in ET Docket 96-8 has adopted a safety standard for human exposure to radio frequency (RF) electromagnetic energy emitted by FCC certified equipment. The wireless adapter meets the Human Exposure limits found in OET Bulletin 65, supplement C, 2001, and ANSI/ IEEE C95.1, 1992. Proper operation of this radio according to the instructions found in this manual will result in exposure substantially below the FCC's recommended limits.

- The following safety precautions should be observed: Do not touch or move antenna while the unit is transmitting or receiving.
- Do not hold any component containing the radio such that the antenna is very close or touching any exposed parts of the body, especially the face or eyes, while transmitting.
- Do not operate the radio or attempt to transmit data unless the antenna is connected; this behavior may cause damage to the radio.
- The use of wireless adapters in hazardous locations is limited by the constraints posed by the safety directors of such environments.
- The use of wireless adapters on airplanes is governed by the Federal Aviation Administration (FAA).
- The use of wireless adapters in hospitals is restricted to the limits set forth by each hospital.

FCC radio frequency interference requirements

This device complies with Part 15 of the FCC Rules. Operation of the device is subject to the following two conditions:

• This device may not cause harmful interference.

• This device must accept any interference that may cause undesired operation.

15.21

You are cautioned that changes or modifications not expressly approved by the part responsible for compliance could void the user's authority to operate the equipment.

Interference statement

This wireless adapter has been tested and found to comply with the limits for a Class B digital device, pursuant to Part 15 of the FCC Rules. These limits are designed to provide reasonable protection against harmful interference in a residential installation. This wireless adapter generates, uses, and can radiate radio frequency energy. If the wireless adapter is not installed and used in accordance with the instructions, the wireless adapter may cause harmful interference to radio communications. There is no guarantee, however, that such interference will not occur in a particular installation. If this wireless adapter does cause harmful interference to radio or television reception (which can be determined by turning the equipment off and on), the user is encouraged to try to correct the interference by taking one or more of the following measures:

- Reorient or relocate the receiving antenna of the equipment experiencing the interference.
- Increase the distance between the wireless adapter and the equipment experiencing the interference.
- Connect the computer with the wireless adapter to an outlet on a circuit different from that to which the equipment experiencing the interference is connected.
- Consult the dealer or an experienced radio/TV technician for help.

FCC RF Radiation Exposure Statement:

1. This Transmitter must not be co-located or operating in conjunction with any other antenna or transmitter.
2. For body worn operation, this device has been tested and meets FCC RF exposure guidelines. When used with an accessory that contains metal may not ensure compliance with FCC RF exposure guidelines.

Canada — Industry Canada (IC)

This device complies with Industry Canada licence-exempt RSS standard(s). Operation is subject to the following two conditions: (1) this device may not cause interference, and (2) this device must accept any interference, including interference that may cause undesired operation of the device.

CAN ICES-3(B)/NMB-3(B)

Le présent appareil est conforme aux CNR d'Industrie Canada applicables aux appareils radio exempts de licence. L'exploitation est autorisée aux deux conditions suivantes : (1) l'appareil ne doit pas produire de brouillage,et (2) l'utilisateur de l'appareil doit accepter tout brouillage radioélectrique subi, même si le brouillage est susceptible d'en compromettre le fonctionnement.

CAN ICES-3(B)/NMB-3(B)

Under Industry Canada regulations, this radio transmitter may only operate using an antenna of a type and maximum (or lesser) gain approved for the transmitter by Industry Canada. To reduce potential radio interference to other users, the antenna type and its gain should be so chosen that the equivalent isotropically radiated power (e.i.r.p.) is not more than that necessary for successful communication.

Conformément à la réglementation d'Industrie Canada, le présent émetteur radio peut fonctionner avec une antenne d'un type et d'un gain maximal (ou inférieur) approuvé pour l'émetteur par Industrie Canada. Dans le but de réduire les risques de brouillage radioélectrique à l'intention des autres utilisateurs, il faut choisir le type d'antenne et son gain de sorte que la puissance isotrope rayonnée équivalente (p.i.r.e.) ne dépasse pas l'intensité nécessaire à l'établissement d'une communication satisfaisante.

IC RF Radiation Exposure Statement:

For body worn operation, this phone has been tested and meets RF exposure guidelines when used with an accessory that contains no metal. Use of other accessories may not ensure compliance with RF exposure guidelines.

Déclaration de l'exposition RF :

Pour le fonctionnement du corps, ce téléphone a été testé et répond aux directives d'exposition RF lorsqu'il est utilisé avec un accessoire qui ne contient pas de métal. Utilisation d'autres accessoires peut ne pas assurer le respect des directives d'exposition RF.

Temperature:
- Operating : 5°C to 35°C
- Storage: -20°C to 60°C

Humidity (Non-Condensing):
- Operating : 20% to 80%
- Storage: 20% to 60%

EN

STARVR SUPPORT
AMERICA: Service.pa@starvr.com
EUROPE: Service.emea@starvr.com
CHINA: Service.cn@starvr.com
TAIWAN: Service.tw@starvr.com

STARVR WEBSITE
VISIT US: https://www.starvr.com/
FOR DEVELOPERS: http://www.developer.starvr.com/

COPYRIGHT & TRADEMARKS
© 2017 STARVR Corporation. All rights reserved.
Version 1.0 issued on May of 2018.
The STARVR™ Logo is a registered trademark or trademark of Starbreeze VR AB.
All use is duly authorized through license.

TM

STARVR

EU DECLARATION OF CONFORMITY

STARVR
STARVR CORPORATION
25F, 88, Sec. 1, Xintai 5th Rd. Xizhi,
New Taipei City, Taiwan

We,

STARVR CORPORATION
25F, 88, Sec. 1, Xintai 5th Rd. Xizhi, New Taipei City, Taiwan
Contact Person: Mr. Eric Lin, E-mail: Eric.Lin@starvr.com

And,

Acer Italy s.r.l.
Via Lepetit, 40, 20020 Lainate (MI) Italy
Tel: +39-02-939-921 ,Fax: +39-02 9399-2913
www.acer.it

Product:	Head mounted display
Trade Name:	StarVR
Model Number:	H7102
SKU Number:	SH501

We, STARVR CORPORATION, hereby declare under our sole responsibility that the product described above is in conformity with the relevant Union harmonization legislation: Directive 2014/53/EU on Radio Equipment, RoHS Directive 2011/65/EU. The following harmonized standards and/or other relevant standards have been applied:

☒ Electromagnetic compatibility (Directive 2014/30/EU)

- ☒ EN 55032:2015
- ☒ EN 61000-3-2:2014 Class D
- ☒ EN 61000-3-3:2013
- ☒ EN 55024: 2010+A1:2015
- ☒ EN 301 489-1 V2.2.0
- ☐ EN 301 489-3 V1.6.1
- ☐ EN 301 489-7 V1.3.1
- ☒ EN 301 489-17 V3.2.0
- ☐ EN 301 489-24 V1.5.1

☒ Radio frequency spectrum usage (Directive 2014/53/EU)

- ☒ EN 300 328 V2.1.1
- ☐ EN 302 291-1 V1.1.1
- ☐ EN 302 291-2 V1.1.1
- ☒ EN 300 440 V2.1.1
- ☐ EN 300 440-2 V1.4.1
- ☐ EN 301 511 V9.0.2
- ☐ EN 301 893 V2.1.0
- ☐ EN 301 908-1 V11.1.1
- ☐ EN 301 908-2 V6.2.1
- ☐ EN 301 908-13 V6.2.1

☒ Healthy and Safety (Directive 2014/35/EU)

- ☒ EN 60950-1:2006/A11:2009/A1:2010/A12:2011/A2:2013
- ☐ EN 62209-1:2006
- ☐ EN 62209-2:2010
- ☐ EN 62311:2008
- ☒ EN 62479:2010
- ☐ EN 50360: 2001/A1: 2012
- ☐ EN 50566:2013

☒ RoHS (Directive 2011/65/EU)

- ☒ EN 50581:2012

Operation frequency and radio-frequency power are listed as below:
2402-2480MHz < 10 dBm

Year to begin affixing CE marking: 2018.

Eric Lin
STARVR CORPORATION

1/22/2018
Date

EN

STARVR CORPORATION
25F, 88, Sec. 1, Xintai 5th Rd. Xizhi,
New Taipei City, Taiwan

Federal Communications Commission
Declaration of Conformity

This device complies with Part 15 of the FCC Rules. Operation is subject to the following two conditions: (1) this device may not cause harmful interference, and (2) this device must accept any interference received, including interference that may cause undesired operation. The following local Manufacturer /Importer is responsible for this declaration:

Product:	Head mounted display
Trade Name:	StarVR
Model Number:	H7102
SKU Number:	SH501
Name of Responsible Party:	Acer America Corporation
Address of Responsible Party:	333 West San Carlos St., Suite 1500 San Jose, CA 95110, U. S. A.
Contact Person:	Acer Representative
Phone No.:	1-254-298-4000
Fax No.:	1-254-298-4147
January 22, 2018	
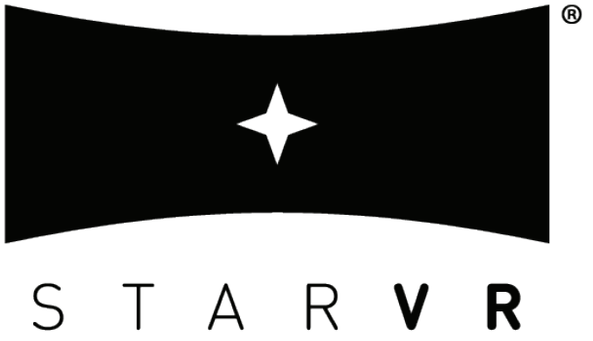
starvr.com