FCC TEST REPORT

Client Name	:	Anker Innovations Limited
Address	:	Room 1318-19, Hollywood Plaza, 610 Nathan Road, Mongkok, Kowloon, Hong Kong
Product Name	:	PowerCore III 10K Wireless
Date	:	Mar. 03, 2022

Shenzhen Anbotek Compliance Laboratory Limited

Contents

1. General Information....4
1.1. Client Information....4
1.2. Description of Device (EUT)....4
1.3. Auxiliary Equipment Used During Test....5
1.4. Description of Test Modes....5
1.5. Description Of Test Setup....6
1.6. Test Equipment List....7
1.7. Measurement Uncertainty....8
1.8. Description of Test Facility....8
2. Summary of Test Results....9
3. Conducted Emission Test....10
3.1. Test Standard and Limit....10
3.2. Test Setup....10
3.3. Test Procedure....10
3.4. Test Data....10
4. Radiation Spurious Emission....15
4.1. Test Standard and Limit....15
4.2. Test Setup....15
4.3. Test Procedure....16
4.4. Test Data....16
5. Antenna Requirement....21
5.1. Test Standard and Requirement....21
5.2. Antenna Connected Construction....21
APPENDIX I -- TEST SETUP PHOTOGRAPH....22
APPENDIX II -- EXTERNAL PHOTOGRAPH....22
APPENDIX III -- INTERNAL PHOTOGRAPH....22

TEST REPORT

Applicant	:	Anker Innovations Limited
Manufacturer	:	Anker Innovations Limited
Product Name	:	PowerCore III 10K Wireless
Model No.	:	A1617
Trade Mark	:	ANKER
Rating(s)	:	Cell Capacity: 3.7Vdc 10000mAh/37Wh USB-C Input: 5V⎓3A/9V⎓2A Max USB-C Output: 5V⎓3A/9V⎓2A Max USB-A Output: 5-6V⎓3A/6-9V⎓2A/9-12V⎓1.5A Max Wireless Output: 10W Max Total Output: 20W Max
Test Standard(s)	**:**	**FCC Part15 Subpart C, Paragraph 15.209**
Test Method(s)	**:**	**ANSI C63.10: 2020**

The device described above is tested by Shenzhen Anbotek Compliance Laboratory Limited to determine the maximum emission levels emanating from the device and the severe levels of the device can endure and its performance criterion. The measurement results are contained in this test report and Shenzhen Anbotek Compliance Laboratory Limited is assumed full of responsibility for the accuracy and completeness of these measurements. Also, this report shows that the EUT (Equipment Under Test) is technically compliant with the FCC Part 15 Subpart C requirements.

This report applies to above tested sample only and shall not be reproduced in part without written approval of Shenzhen Anbotek Compliance Laboratory Limited.

Date of Receipt	Dec. 13, 2021
Date of Test	Dec. 13~ 30, 2021
Prepared By	(Ella Liang)
Approved & Authorized Signer	(Kingkong Jin)

1. General Information

1.1. Client Information

Applicant	:	Anker Innovations Limited
Address	:	Room 1318-19, Hollywood Plaza, 610 Nathan Road, Mongkok, Kowloon, Hong Kong
Manufacturer	:	Anker Innovations Limited
Address	:	Room 1318-19, Hollywood Plaza, 610 Nathan Road, Mongkok, Kowloon, Hong Kong

1.2. Description of Device (EUT)

Product Name	:	PowerCore III 10K Wireless	
Model No.	:	A1617	
Trade Mark	:	ANKER	
Test Power Supply	:	AC 120V, 60Hz for adapter/ AC 240V, 50Hz for adapter/ DC 3.7V battery inside	
Test Sample No.	:	1-2-1(Normal Sample), 1-2-2(Engineering Sample)	
Product Description	:	Operation Frequency:	111-205KHz
		Modulation Type:	FSK
		Antenna Type:	Inductive loop coil Antenna
		Antenna Gain(Peak):	0 dBi (Provided by customer)
Remark: 1) For a more detailed features description, please refer to the manufacturer's specifications or the User's Manual.			

1.3. Auxiliary Equipment Used During Test

Adapter	:	M/N: A2630 Input: 100-240V~1.3A, 50-60Hz USB-C Output: 5V⎓3A, 9V⎓2A USB-A Output: 5V⎓4A
Wireless charging load	:	Manufacturer: Gopod Group Holding Limited. M/N: DTE324EM Power: 5W/7.5W/10W/15W Last Cal.: Oct. 30, 2020 Cal. Interval: 1 Year

1.4. Description of Test Modes

To investigate the maximum EMI emission characteristics generates from EUT, the test system was pre-scanning tested base on the consideration of following EUT operation mode or test configuration mode which possible have effect on EMI emission level. Each of these EUT operation mode(s) or test configuration mode(s) mentioned above was evaluated respectively.

Pretest Mode	Description
Mode 1	Charging & Wireless Charging Mode
Mode 2	Wireless charging Mode

For Conducted Emission	
Final Test Mode	Description
Mode 1	Charging & Wireless Charging Mode

For Radiated Emission	
Final Test Mode	Description
Mode 1	Charging & Wireless Charging Mode
Mode 2	Wireless charging Mode

Note: (1)Test channel is 0.1292MHz.

(2) All the situation(full load, half load and empty load) has been tested,only the worst situation (full load 10W) was recorded in the report.

1.5. Description Of Test Setup

CE

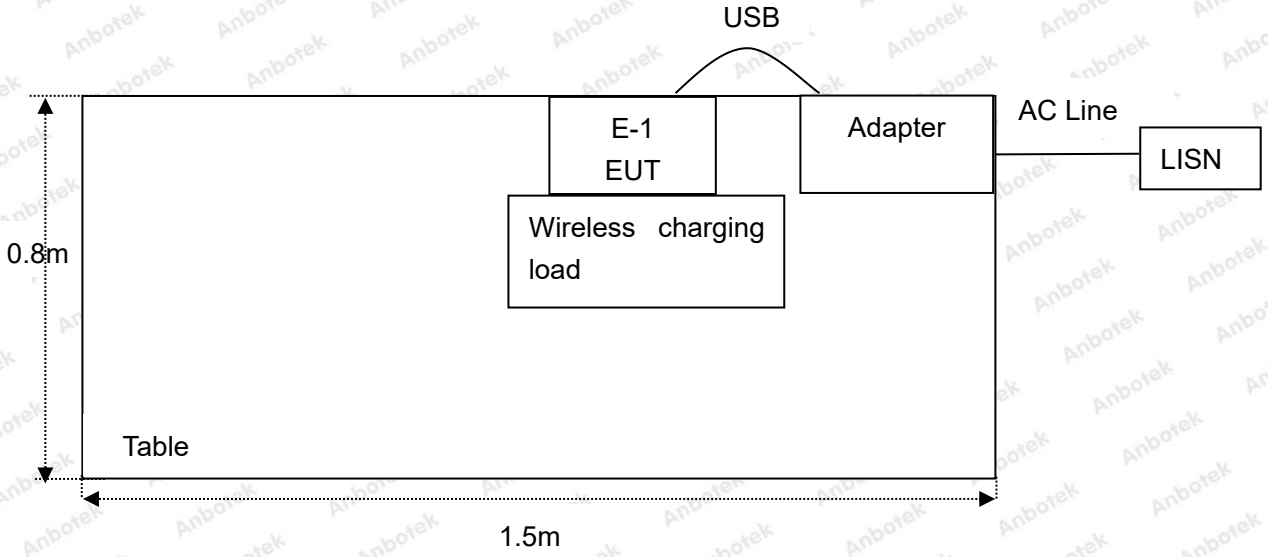

RE

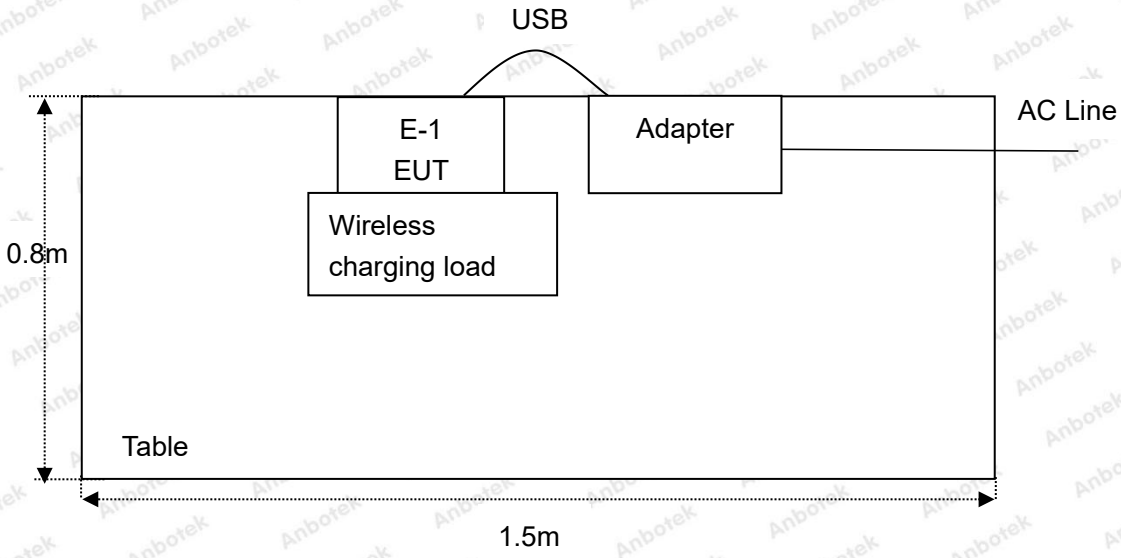

1.6. Test Equipment List

Item	Equipment	Manufacturer	Model No.	Serial No.	Last Cal.	Cal. Interval
1.	Three Phase V-type Artificial Power Network	CYBERTEK	EM5040DT	E215040DT001	Jul 05, 2021	1 Year
2.	EMI Test Receiver	Rohde & Schwarz	ESCI	100627	Oct. 22, 2021	1 Year
3.	EMI Test Receiver	Rohde & Schwarz	ESR26	101481	Oct. 22, 2021	1 Year
4.	RF Switching Unit	Compliance Direction	RSU-M2	38303	Oct. 22, 2021	1 Year
5.	MAX Spectrum Analysis	Agilent	N9020A	MY51170037	Oct. 22, 2021	1 Year
6.	Preamplifier	SKET Electronic	BK1G18G30D	KD17503	Oct. 22, 2021	1 Year
7.	Double Ridged Horn Antenna	Instruments corporation	GTH-0118	351600	Oct. 22, 2021	2 Year
8.	Bilog Broadband Antenna	Schwarzbeck	VULB9163	VULB 9163-289	Oct. 22, 2021	2 Year
9.	Loop Antenna	Schwarzbeck	FMZB1519B	00053	Oct. 22, 2021	2 Year
10.	Horn Antenna	A-INFO	LB-180400-KF	J211060628	Oct. 22, 2021	2 Year
11.	Pre-amplifier	SONOMA	310N	186860	Oct. 22, 2021	1 Year
12.	EMI Test Software EZ-EMC	SHURPLE	N/A	N/A	N/A	N/A
13.	RF Test Control System	YIHENG	YH3000	2017430	Oct. 22, 2021	1 Year
14.	Power Sensor	DAER	RPR3006W	15I00041SN045	Oct. 22, 2021	1 Year
15.	Power Sensor	DAER	RPR3006W	15I00041SN046	Oct. 22, 2021	1 Year
16.	MXA Spectrum Analysis	KEYSIGHT	N9020A	MY53280032	Oct. 22, 2021	1 Year
17.	MXG RF Vector Signal Generator	Agilent	N5182A	MY48180656	Oct. 22, 2021	1 Year
18.	Signal Generator	Agilent	E4421B	MY41000743	Oct. 22, 2021	1 Year
19.	DC Power Supply	IVYTECH	IV3605	1804D360510	Oct. 22, 2021	1 Year
20.	Constant Temperature Humidity Chamber	ZHONGJIAN	ZJ-KHWS80B	N/A	Oct. 22, 2021	1 Year

1.7. Measurement Uncertainty

Radiation Uncertainty	:	Ur = 3.9 dB (Horizontal)
		Ur = 3.8 dB (Vertical)
Conduction Uncertainty	:	Uc = 3.4 dB

1.8. Description of Test Facility

The test facility is recognized, certified, or accredited by the following organizations:

FCC-Registration No.: 184111

Shenzhen Anbotek Compliance Laboratory Limited, EMC Laboratory has been registered and fully described in a report filed with the (FCC) Federal Communications Commission. The acceptance letter from the FCC is maintained in our files. Registration No. 184111.

ISED-Registration No.: 8058A

Shenzhen Anbotek Compliance Laboratory Limited, EMC Laboratory has been registered and fully described in a report filed with the (ISED) Innovation, Science and Economic Development Canada. The acceptance letter from the ISED is maintained in our files. Registration 8058A.

Test Location

Shenzhen Anbotek Compliance Laboratory Limited.
1/F, Building D, Sogood Science and Technology Park, Sanwei community, Hangcheng Street, Bao'an District, Shenzhen, Guangdong, China.518102

2. Summary of Test Results

Standard Section	Test Item	Result
FCC Part 15, Paragraph 15.207	Conducted Emission Test	PASS
FCC Part 15, Paragraph 15.209(a)(f)	Spurious Emission	PASS
Part 15.203	Antenna Requirement	PASS

3. Conducted Emission Test

3.1. Test Standard and Limit

Test Standard	FCC Part15 Section 15.207		
Test Limit	Frequency	Maximum RF Line Voltage (dBuV)	
		Quasi-peak Level	Average Level
	150kHz~500kHz	66 ~ 56 *	56 ~ 46 *
	500kHz~5MHz	56	46
	5MHz~30MHz	60	50
Remark: (1) *Decreasing linearly with logarithm of the frequency. (2) The lower limit shall apply at the transition frequency.			

3.2. Test Setup

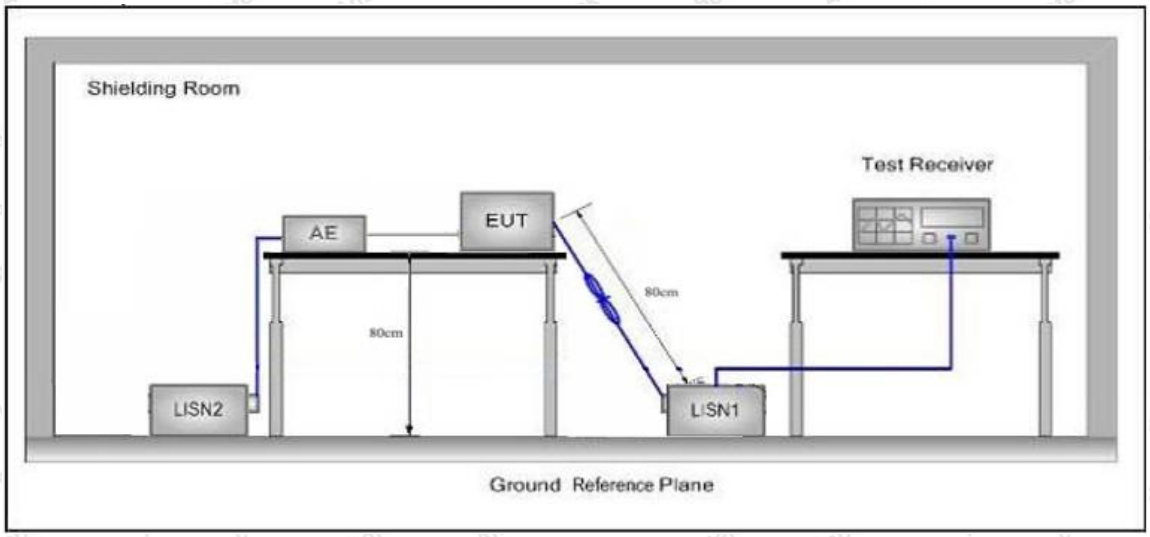

3.3. Test Procedure

The EUT system is connected to the power mains through a line impedance stabilization network (L.I.S.N.). This provides a 50ohm coupling impedance for the EUT system. Please refer the block diagram of the test setup and photographs. Both sides of AC line are checked to find out the maximum conducted emission. In order to find the maximum emission levels, the relative positions of equipment and all of the interface cables shall be changed according to FCC ANSI C63.10-2020 on Conducted Emission Measurement.

The bandwidth of test receiver (ESCI) set at 9kHz.

The frequency range from 150kHz to 30MHz is checked.

3.4. Test Data

Please to see the following pages

Conducted Emission Test Data

Test Site: 1# Shielded Room
Operating Condition: Mode 1
Test Specification: AC 240V, 60Hz for adapter
Comment: Live Line
Tem.: 22.8℃ Hum.: 47%

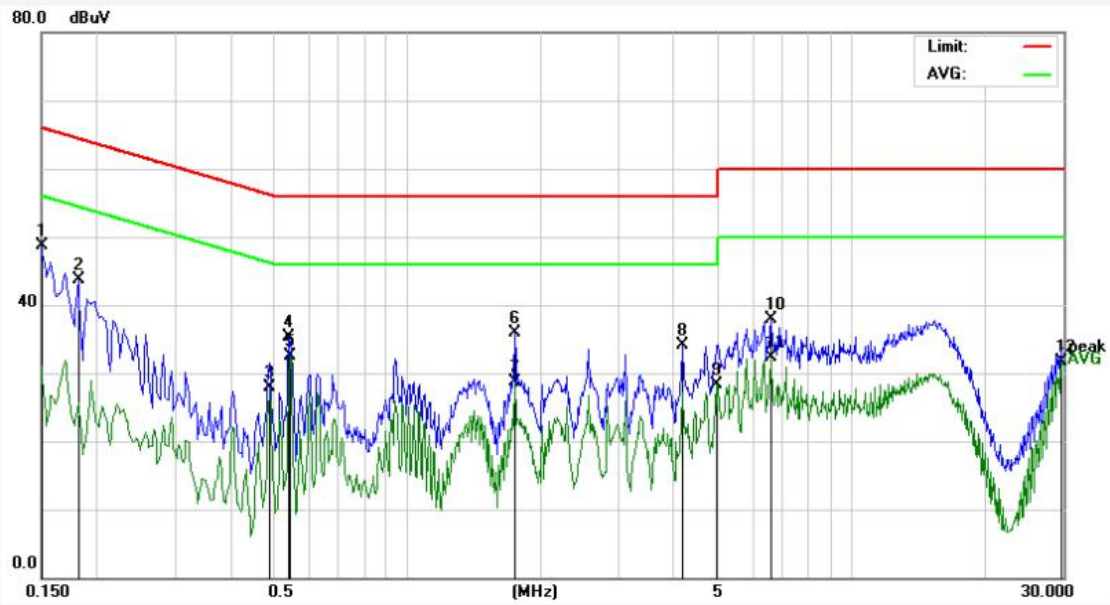

No.	Freq. (MHz)	Reading (dBuV)	Factor (dB)	Result (dBuV)	Limit (dBuV)	Over Limit (dB)	Detector	Remark
1	0.1500	48.61	0.11	48.72	65.99	-17.27	QP	
2	0.1819	43.55	0.12	43.67	64.39	-20.72	QP	
3	0.4900	27.79	0.15	27.94	46.17	-18.23	AVG	
4	0.5420	35.12	0.15	35.27	56.00	-20.73	QP	
5	0.5460	32.39	0.15	32.54	46.00	-13.46	AVG	
6	1.7500	35.74	0.13	35.87	56.00	-20.13	QP	
7	1.7500	28.55	0.13	28.68	46.00	-17.32	AVG	
8	4.1700	34.06	0.11	34.17	56.00	-21.83	QP	
9	4.9780	28.20	0.11	28.31	46.00	-17.69	AVG	
10	6.6220	37.81	0.11	37.92	60.00	-22.08	QP	
11	6.6220	32.15	0.11	32.26	50.00	-17.74	AVG	
12	29.7300	31.30	0.36	31.66	50.00	-18.34	AVG	

Conducted Emission Test Data

Test Site: 1# Shielded Room
Operating Condition: Mode 1
Test Specification: AC 240V, 60Hz for adapter
Comment: Neutral Line
Tem.: 22.8℃ Hum.: 47%

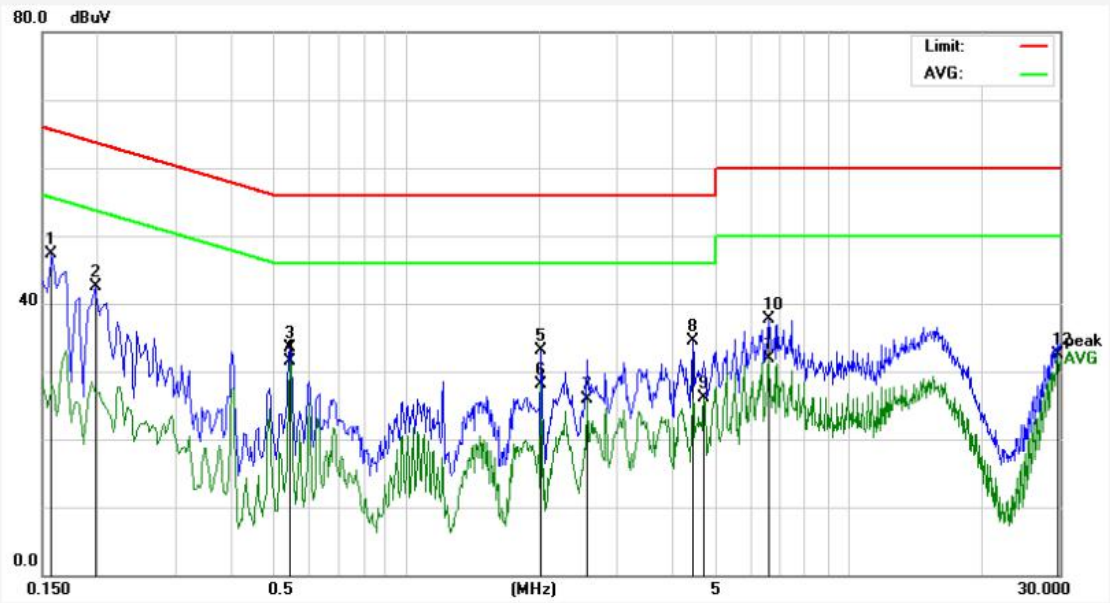

No.	Freq. (MHz)	Reading (dBuV)	Factor (dB)	Result (dBuV)	Limit (dBuV)	Over Limit (dB)	Detector	Remark
1	0.1580	47.21	0.12	47.33	65.56	-18.23	QP	
2	0.1980	42.33	0.12	42.45	63.69	-21.24	QP	
3	0.5460	33.40	0.15	33.55	56.00	-22.45	QP	
4	0.5460	31.38	0.15	31.53	46.00	-14.47	AVG	
5	2.0180	33.05	0.12	33.17	56.00	-22.83	QP	
6	2.0180	27.95	0.12	28.07	46.00	-17.93	AVG	
7	2.5579	25.73	0.12	25.85	46.00	-20.15	AVG	
8	4.4420	34.37	0.11	34.48	56.00	-21.52	QP	
9	4.7100	26.06	0.11	26.17	46.00	-19.83	AVG	
10	6.6220	37.69	0.11	37.80	60.00	-22.20	QP	
11	6.6220	31.86	0.11	31.97	50.00	-18.03	AVG	
12	29.7340	32.12	0.36	32.48	50.00	-17.52	AVG	

Conducted Emission Test Data

Test Site: 1# Shielded Room
Operating Condition: Mode 1
Test Specification: AC 120V, 60Hz for adapter
Comment: Live Line
Tem.: 22.8℃ Hum.: 47%

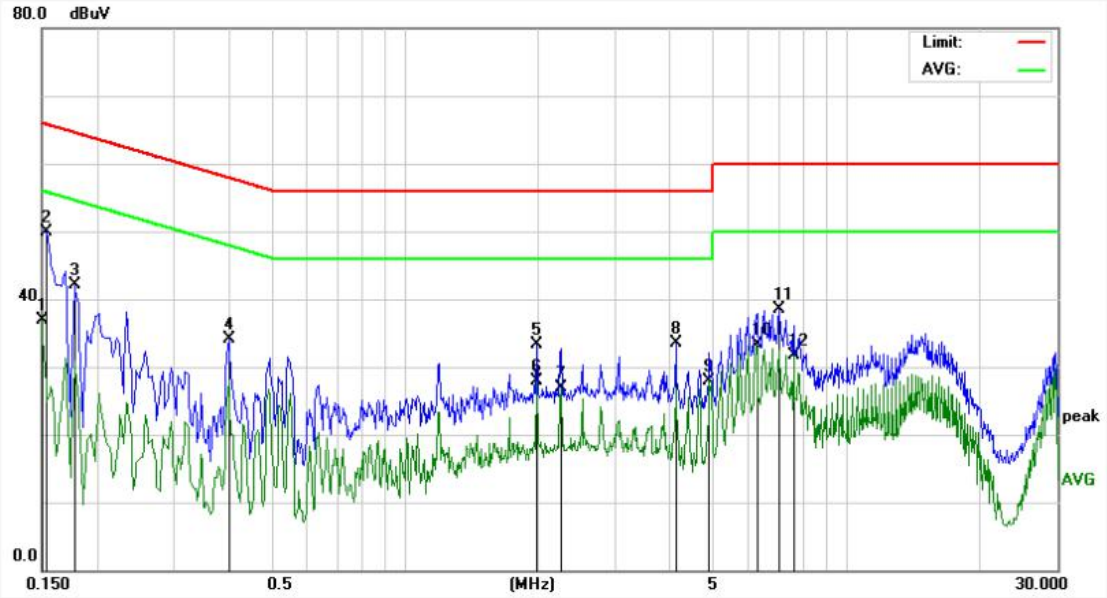

No.	Freq. (MHz)	Reading (dBuV)	Factor (dB)	Result (dBuV)	Limit (dBuV)	Over Limit (dB)	Detector	Remark
1	0.1499	36.89	0.11	37.00	56.00	-19.00	AVG	
2	0.1539	49.86	0.12	49.98	65.78	-15.80	QP	
3	0.1780	42.07	0.12	42.19	64.57	-22.38	QP	
4	0.3980	33.91	0.11	34.02	57.89	-23.87	QP	
5	1.9860	33.27	0.12	33.39	56.00	-22.61	QP	
6	1.9860	27.73	0.12	27.85	46.00	-18.15	AVG	
7	2.2500	26.85	0.12	26.97	46.00	-19.03	AVG	
8	4.1019	33.45	0.11	33.56	56.00	-22.44	QP	
9	4.8939	27.89	0.11	28.00	46.00	-18.00	AVG	
10	6.2459	33.26	0.11	33.37	50.00	-16.63	AVG	
11	7.0419	38.38	0.11	38.49	60.00	-21.51	QP	
12	7.5699	31.57	0.12	31.69	50.00	-18.31	AVG	

Conducted Emission Test Data

Test Site: 1# Shielded Room
Operating Condition: Mode 1
Test Specification: AC 120V, 60Hz for adapter
Comment: Neutral Line
Tem.: 22.8℃ Hum.: 47%

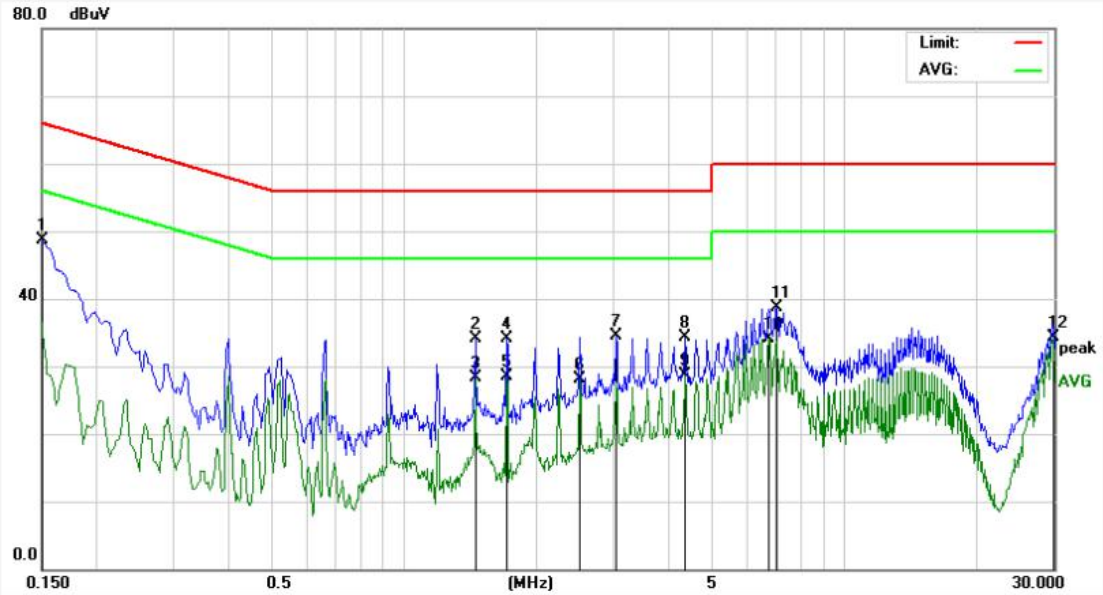

No.	Freq. (MHz)	Reading (dBuV)	Factor (dB)	Result (dBuV)	Limit (dBuV)	Over Limit (dB)	Detector	Remark
1	0.1499	48.60	0.11	48.71	66.00	-17.29	QP	
2	1.4540	33.95	0.14	34.09	56.00	-21.91	QP	
3	1.4540	28.22	0.14	28.36	46.00	-17.64	AVG	
4	1.7140	33.91	0.13	34.04	56.00	-21.96	QP	
5	1.7140	28.37	0.13	28.50	46.00	-17.50	AVG	
6	2.5100	27.95	0.12	28.07	46.00	-17.93	AVG	
7	3.0380	34.47	0.12	34.59	56.00	-21.41	QP	
8	4.3578	34.24	0.11	34.35	56.00	-21.65	QP	
9	4.3578	28.60	0.11	28.71	46.00	-17.29	AVG	
10	6.7579	34.00	0.11	34.11	50.00	-15.89	AVG	
11	7.0259	38.58	0.11	38.69	60.00	-21.31	QP	
12	29.9540	33.91	0.37	34.28	50.00	-15.72	AVG	

4. Radiation Spurious Emission

4.1. Test Standard and Limit

Test Standard	FCC Part15 C Section 15.209 and 15.205				
Test Limit	Frequency (MHz)	Field strength (microvolt/meter)	Limit (dBuV/m)	Remark	Measurement distance (m)
	0.009MHz~0.490MHz	2400/F(kHz)	-	-	300
	0.490MHz-1.705MHz	24000/F(kHz)	-	-	30
	1.705MHz-30MHz	30	-	-	30
	30MHz~88MHz	100	40.0	Quasi-peak	3
	88MHz~216MHz	150	43.5	Quasi-peak	3
	216MHz~960MHz	200	46.0	Quasi-peak	3
	960MHz~1000MHz	500	54.0	Quasi-peak	3
	Above 1000MHz	500	54.0	Average	3
		-	74.0	Peak	3

Remark:
(1)The lower limit shall apply at the transition frequency.
(2) 15.35(b), Unless otherwise specified, the limit on peak radio frequency emissions is 20dB above the maximum permitted average emission limit applicable to the equipment under test. This peak limit applies to the total peak emission level radiated by the device.

4.2. Test Setup

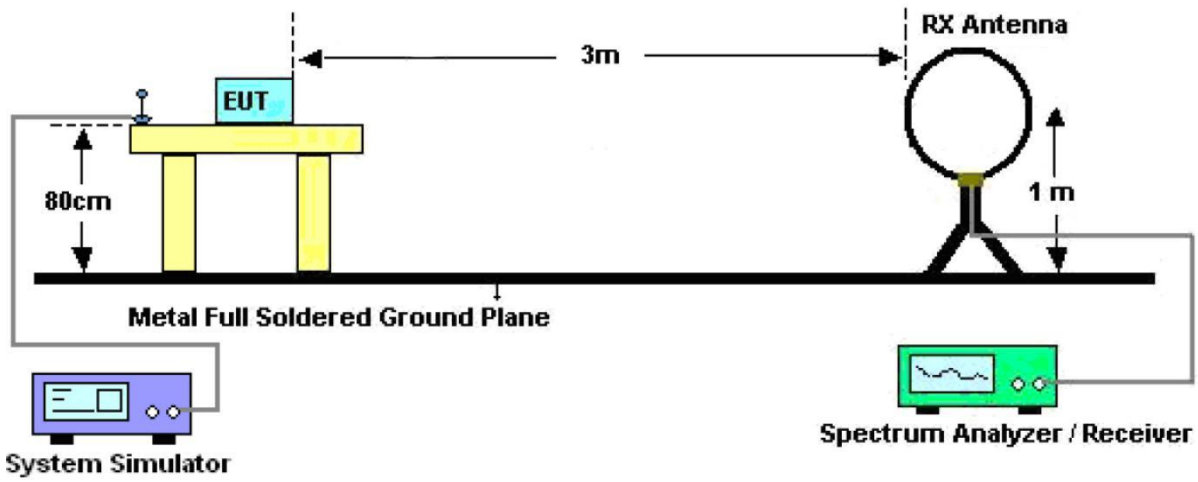

Figure 1. Below 30MHz

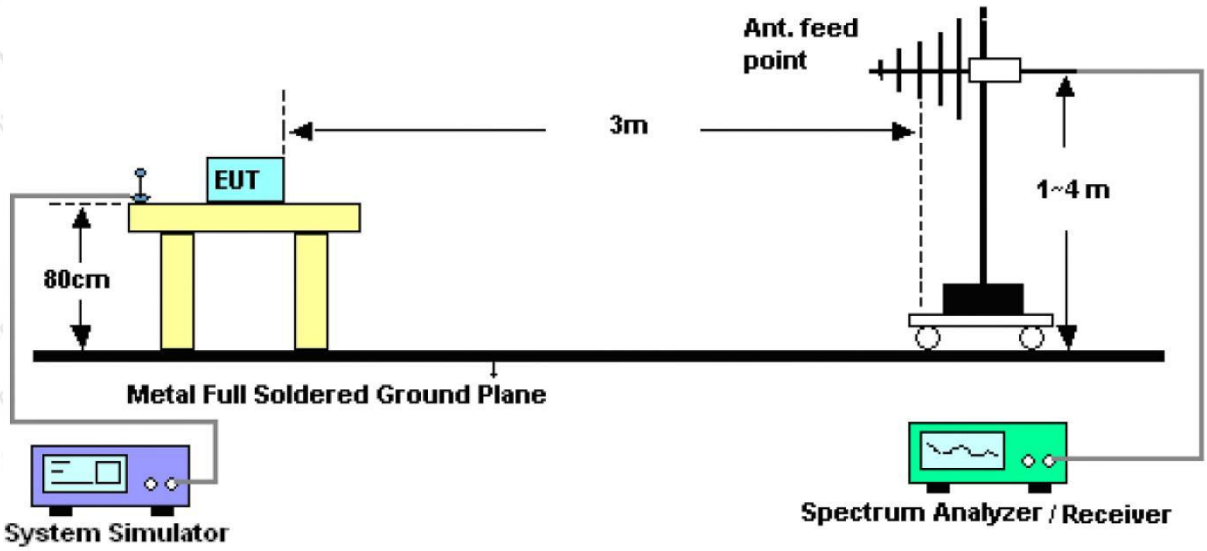

Figure 2. 30MHz to 1GHz

4.3. Test Procedure

For below 1GHz: The EUT is placed on a turntable, which is 0.8m above the ground plane.
The turn table can rotate 360 degrees to determine the position of the maximum emission level. The EUT is set 3 meters away from the receiving antenna which is mounted on a antenna tower. The antenna can be moved up and down from 1 to 4 meters to find out the maximum emission level. Rotated the EUT through three orthogonal axes to determine the maximum emissions, both horizontal and vertical polarization of the antenna are set on test. The EUT is tested in 9*6*6 Chamber. The device is evaluated in xyz orientation.

For 9kHz to 150kHz, Set the spectrum analyzer as:
RBW = 200Hz, VBW =1kHz, Detector= Quasi-Peak, Trace mode= Max hold, Sweep- auto couple.

For 150kHz to 30MHz, Set the spectrum analyzer as:
RBW = 9KHz, VBW =30kHz, Detector= Quasi-Peak, Trace mode= Max hold, Sweep- auto couple.

For 30MHz to 1000MHz, Set the spectrum analyzer as:
RBW = 100kHz, VBW =300kHz, Detector= Quasi-Peak, Trace mode= Max hold, Sweep- auto couple.

4.4. Test Data

PASS

Note: The data is in TX mode, and this is the worst mode.

Test Results

(Between 9KHz – 30MHz)

Standard:	**FCC PART15 C _3m**	**Power Source:**	**AC 120V, 60Hz for adapter**
Test item:	**Radiation Test**	**Temp.(C)/Hum.(%RH):**	**22.8℃/48%RH**
Test Mode:	**Mode 1**	**Distance:**	**3m**

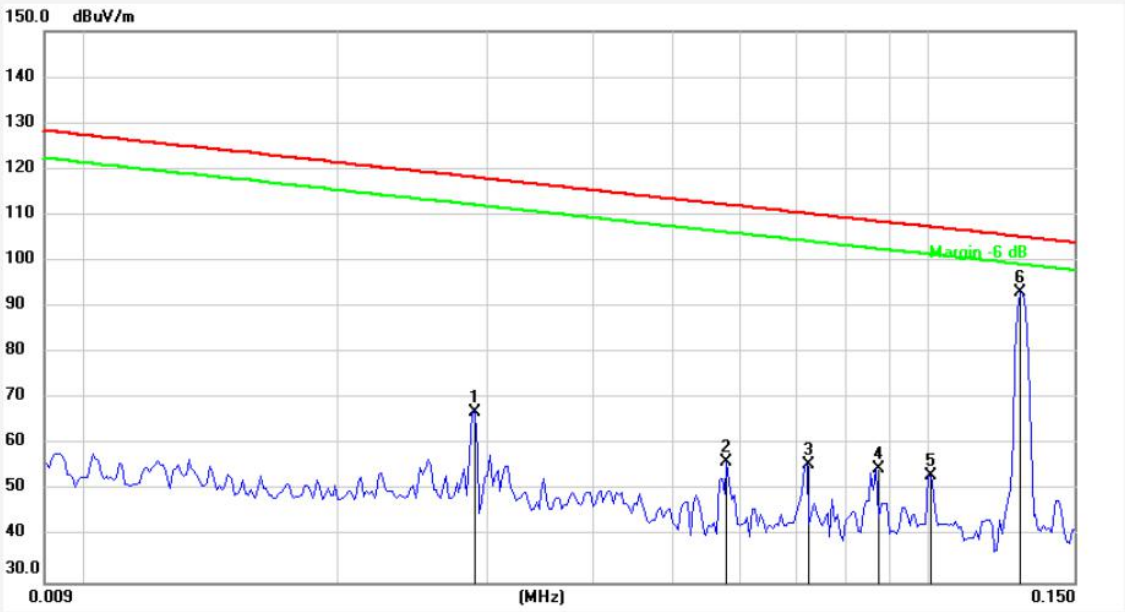

No.	Freq. (MHz)	Reading (dBuV)	Factor ()	Result (dBuV/m)	Limit (dBuV/m)	Over Limit (dB)	Detector	Height (cm)	degree (deg)	Remark
1	0.0291	46.64	20.43	67.07	118.18	-51.11	AV			
2	0.0580	35.83	20.36	56.19	112.22	-56.03	AV			
3	0.0722	35.23	20.37	55.60	110.33	-54.73	AV			
4	0.0873	34.40	20.38	54.78	108.69	-53.91	AV			
5	0.1010	33.08	20.29	53.37	107.43	-54.06	AV			
6	0.1292	72.67	20.34	93.01	105.31	-12.30	AV			

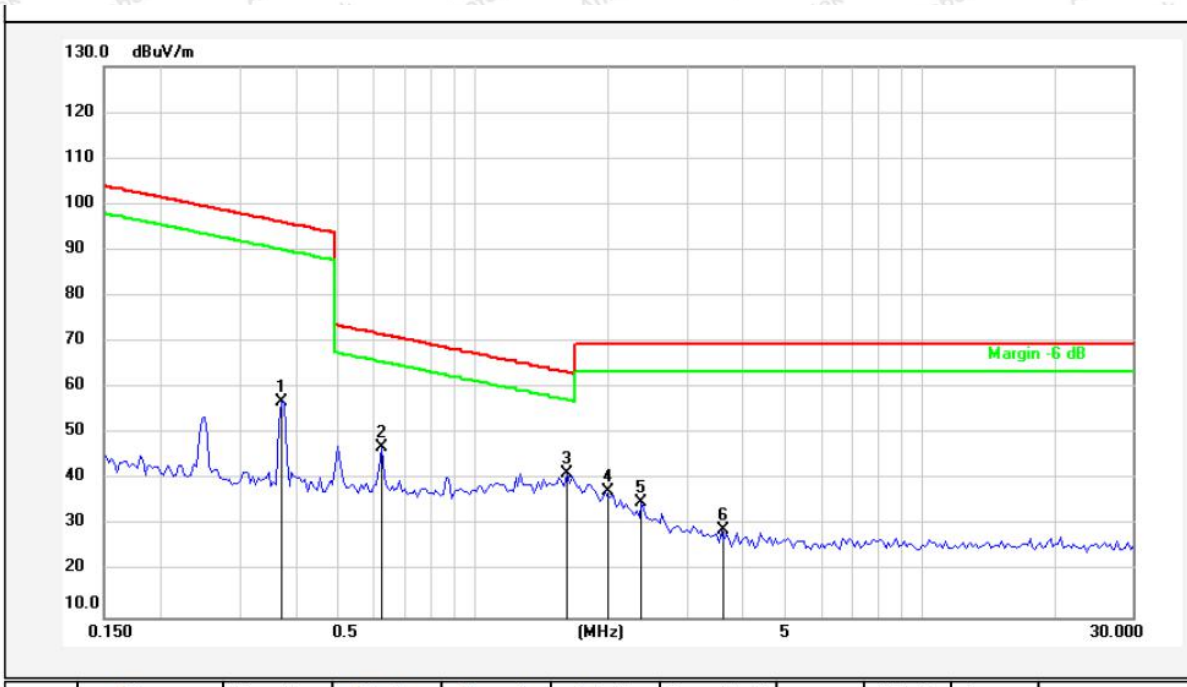

No.	Freq. (MHz)	Reading (dBuV)	Factor ()	Result (dBuV/m)	Limit (dBuV/m)	Over Limit (dB)	Detector	Height (cm)	degree (deg)	Remark
1	0.3741	36.79	20.28	57.07	96.13	-39.06	QP			
2	0.6271	26.70	20.27	46.97	71.66	-24.69	QP			
3	1.6276	21.17	20.27	41.44	63.40	-21.96	QP			
4	1.9854	17.31	20.28	37.59	69.50	-31.91	QP			
5	2.3899	14.88	20.29	35.17	69.50	-34.33	QP			
6	3.6034	8.59	20.34	28.93	69.50	-40.57	QP			

Remark： According to FCC PART 15.209 (d), the emission limits for the frequency bands 9–90 kHz, 110–490 kHz and above 1000 MHz, Radiated emission limits in these three bands are based on measurements employing an average detector.

(Between 30MHz –1000 MHz)

Standard:	**FCC PART15 C _3m**	**Polarization:**	**Horizontal**
Test item:	**Radiation Test**	**Power Source:**	**AC 120V, 60Hz for adapter**
Test Mode:	**Mode 1**	**Temp.(C)/Hum.(%RH):**	**23.4℃/50%RH**
Distance:	**3m**		

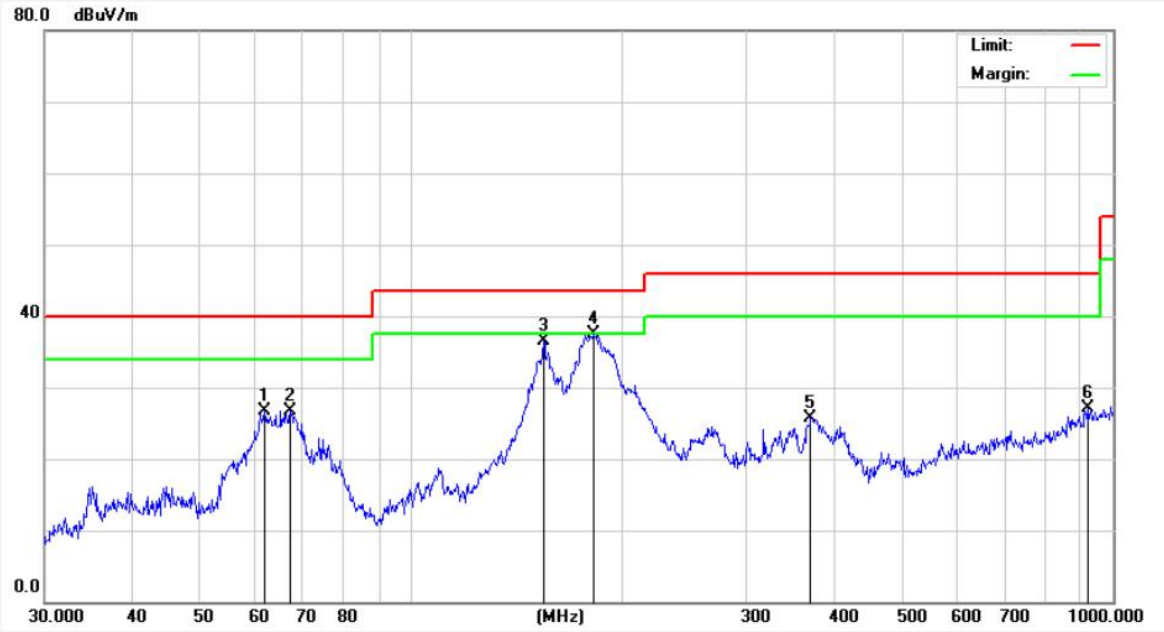

No.	Freq. (MHz)	Reading (dBuV)	Factor (dB/m)	Result (dBuV/m)	Limit (dBuV/m)	Over Limit (dB)	Detector	Height (cm)	degree (deg)	Remark
1	61.7781	44.86	-18.13	26.73	40.00	-13.27	QP			
2	67.2022	47.38	-20.61	26.77	40.00	-13.23	QP			
3	154.2786	59.86	-23.35	36.51	43.50	-6.99	QP			
4	181.9201	60.57	-23.09	37.48	43.50	-6.02	QP			
5	370.7022	41.80	-16.07	25.73	46.00	-20.27	QP			
6	919.2866	33.07	-5.99	27.08	46.00	-18.92	QP			

Standard:	**FCC PART15 C _3m**	**Polarization:**	**Vertical**
Test item:	**Radiation Test**	**Power Source:**	**AC 120V, 60Hz for adapter**
Test Mode:	**Mode 1**	**Temp.(C)/Hum.(%RH):**	**23.4℃/50%RH**
Distance:	**3m**		

No.	Freq. (MHz)	Reading (dBuV)	Factor (dB/m)	Result (dBuV/m)	Limit (dBuV/m)	Over Limit (dB)	Detector	Height (cm)	degree (deg)	Remark
1	34.8823	43.30	-17.17	26.13	40.00	-13.87	QP			
2	67.2022	47.68	-19.60	28.08	40.00	-11.92	QP			
3	79.2425	51.32	-19.40	31.92	40.00	-8.08	QP			
4	162.0414	56.30	-21.55	34.75	43.50	-8.75	QP			
5	177.5089	55.56	-20.74	34.82	43.50	-8.68	QP			
6	368.1116	39.07	-14.79	24.28	46.00	-21.72	QP			

5. Antenna Requirement

5.1. Test Standard and Requirement

Test Standard	FCC Part15 Section 15.203
Requirement	An intentional radiator shall be designed to ensure that no antenna other than that furnished by the responsible party shall be used with the device. The use of a permanently attached antenna or of an antenna that uses a unique coupling to the intentional radiator, the manufacturer may design the unit so that a broken antenna can be replaced by the user, but the use of a standard antenna jack or electrical connector is prohibited.

5.2. Antenna Connected Construction

The antenna is a Inductive loop coil Antenna which permanently attached, and the best case gain of the antenna is 0 dBi. It complies with the standard requirement.

APPENDIX I -- TEST SETUP PHOTOGRAPH

Please refer to separated files for Test Setup Photos of the EUT.

APPENDIX II -- EXTERNAL PHOTOGRAPH

Please refer to separated files for External Photos of the EUT.

APPENDIX III -- INTERNAL PHOTOGRAPH

Please refer to separated files for Internal Photos of the EUT.

---------- End of Report ----------