FCC TEST REPORT

Client Name	:	Anker Innovations Limited
Address	:	Room 1318-19, Hollywood Plaza, 610 Nathan Road, Mongkok, Kowloon, Hong Kong
Product Name	:	Anker 633 Magnetic Battery (MagGo)
Date	:	Feb. 16, 2022

Shenzhen Anbotek Compliance Laboratory Limited

Contents

1. General Information....4
1.1. Client Information....4
1.2. Description of Device (EUT)....4
1.3. Auxiliary Equipment Used During Test....5
1.4. Description of Test Modes....5
1.5. Description Of Test Setup....6
1.6. Test Equipment List....7
1.7. Measurement Uncertainty....8
1.8. Description of Test Facility....8
2. Summary of Test Results....9
3. Conducted Emission Test....10
3.1. Test Standard and Limit....10
3.2. Test Setup....10
3.3. Test Procedure....10
3.4. Test Data....10
4. Radiation Spurious Emission....15
4.1. Test Standard and Limit....15
4.2. Test Setup....15
4.3. Test Procedure....16
4.4. Test Data....16
5. Antenna Requirement....21
5.1. Test Standard and Requirement....21
5.2. Antenna Connected Construction....21
APPENDIX I -- TEST SETUP PHOTOGRAPH....22
APPENDIX II -- EXTERNAL PHOTOGRAPH....22
APPENDIX III -- INTERNAL PHOTOGRAPH....22

TEST REPORT

Applicant	:	Anker Innovations Limited
Manufacturer	:	Anker Innovations Limited
Product Name	:	Anker 633 Magnetic Battery (MagGo)
Model No.	:	A1641
Trade Mark	:	ANKER
Rating(s)	:	USB-C Input: 5V⎓3A/9V⎓2.22A USB-C Output: 5V⎓3A/9V⎓2.22A USB-A Output: 5V⎓3A/9V⎓2A Wireless Output: 5W/7.5W Total Output: 5V⎓3.6A Max Battery Capacity: 5000mAh, 7.7V, 38.5Wh
Test Standard(s)	:	**FCC Part15 Subpart C, Paragraph 15.209**
Test Method(s)	:	**ANSI C63.10: 2020**

The device described above is tested by Shenzhen Anbotek Compliance Laboratory Limited to determine the maximum emission levels emanating from the device and the severe levels of the device can endure and its performance criterion. The measurement results are contained in this test report and Shenzhen Anbotek Compliance Laboratory Limited is assumed full of responsibility for the accuracy and completeness of these measurements. Also, this report shows that the EUT (Equipment Under Test) is technically compliant with the FCC Part 15 Subpart C requirements.

This report applies to above tested sample only and shall not be reproduced in part without written approval of Shenzhen Anbotek Compliance Laboratory Limited.

Date of Receipt	Dec. 08, 2021
Date of Test	Dec. 08~ 17, 2021
Prepared By	(Ella Liang)
Approved & Authorized Signer	(Kingkong Jin)

1. General Information

1.1. Client Information

Applicant	:	Anker Innovations Limited
Address	:	Room 1318-19, Hollywood Plaza, 610 Nathan Road, Mongkok, Kowloon, Hong Kong
Manufacturer	:	Anker Innovations Limited
Address	:	Room 1318-19, Hollywood Plaza, 610 Nathan Road, Mongkok, Kowloon, Hong Kong

1.2. Description of Device (EUT)

Product Name	:	Anker 633 Magnetic Battery (MagGo)	
Model No.	:	A1641	
Trade Mark	:	ANKER	
Test Power Supply	:	AC 120V, 60Hz for adapter/ AC 240V, 50Hz for adapter/ DC 7.7V battery inside	
Test Sample No.	:	1-2-1(Normal Sample), 1-2-2(Engineering Sample)	
Product Description	:	Operation Frequency:	111-149KHz
		Modulation Type:	FSK
		Antenna Type:	Inductive loop coil Antenna
		Antenna Gain(Peak):	0 dBi (Provided by customer)
Remark: 1) For a more detailed features description, please refer to the manufacturer's specifications or the User's Manual.			

1.3. Auxiliary Equipment Used During Test

Adapter	:	M/N: A2630 Input: 100-240V-1.3A,50-60Hz USB-C Output: 5V⎓3A, 9V⎓2A USB-A Output: 5V⎓4A
Wireless charging load	:	Manufacturer: Shenzhen Ouju Technology Co., Ltd. M/N: CD2577 Power: 5W/7.5W/10W/15W Last Cal.: Oct. 26, 2020 Cal. Interval: 1 Year

1.4. Description of Test Modes

To investigate the maximum EMI emission characteristics generates from EUT, the test system was pre-scanning tested base on the consideration of following EUT operation mode or test configuration mode which possible have effect on EMI emission level. Each of these EUT operation mode(s) or test configuration mode(s) mentioned above was evaluated respectively.

Pretest Mode	Description
Mode 1	Charging & Wireless Charging Mode
Mode 2	Wireless charging Mode

For Conducted Emission	
Final Test Mode	Description
Mode 1	Charging & Wireless Charging Mode

For Radiated Emission	
Final Test Mode	Description
Mode 1	Charging & Wireless Charging Mode
Mode 2	Wireless charging Mode

Note: (1)Test channel is 0.1247MHz.

(2) All the situation(full load, half load and empty load) has been tested,only the worst situation (full load 7.5W) was recorded in the report.

1.5. Description Of Test Setup

CE

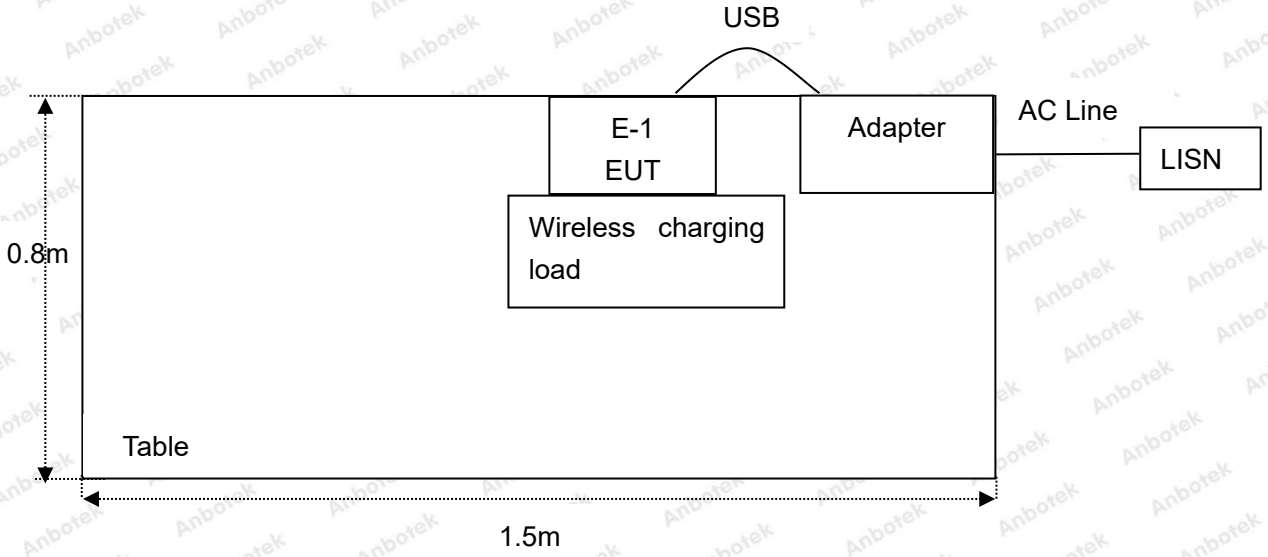

RE

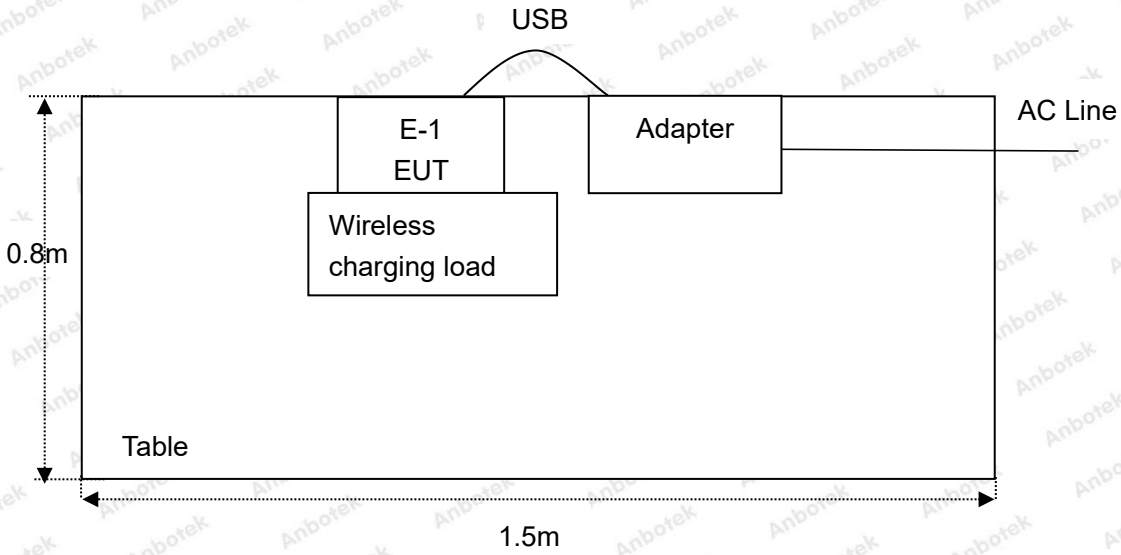

1.6. Test Equipment List

Item	Equipment	Manufacturer	Model No.	Serial No.	Last Cal.	Cal. Interval
1.	Three Phase V-type Artificial Power Network	CYBERTEK	EM5040DT	E215040DT001	Jul 05, 2021	1 Year
2.	EMI Test Receiver	Rohde & Schwarz	ESCI	100627	Oct. 22, 2021	1 Year
3.	EMI Test Receiver	Rohde & Schwarz	ESR26	101481	Oct. 22, 2021	1 Year
4.	RF Switching Unit	Compliance Direction	RSU-M2	38303	Oct. 22, 2021	1 Year
5.	MAX Spectrum Analysis	Agilent	N9020A	MY51170037	Oct. 22, 2021	1 Year
6.	Preamplifier	SKET Electronic	BK1G18G30D	KD17503	Oct. 22, 2021	1 Year
7.	Double Ridged Horn Antenna	Instruments corporation	GTH-0118	351600	Oct. 22, 2021	2 Year
8.	Bilog Broadband Antenna	Schwarzbeck	VULB9163	VULB 9163-289	Oct. 22, 2021	2 Year
9.	Loop Antenna	Schwarzbeck	FMZB1519B	00053	Oct. 22, 2021	2 Year
10.	Horn Antenna	A-INFO	LB-180400-KF	J211060628	Oct. 22, 2021	2 Year
11.	Pre-amplifier	SONOMA	310N	186860	Oct. 22, 2021	1 Year
12.	EMI Test Software EZ-EMC	SHURPLE	N/A	N/A	N/A	N/A
13.	RF Test Control System	YIHENG	YH3000	2017430	Oct. 22, 2021	1 Year
14.	Power Sensor	DAER	RPR3006W	15I00041SN045	Oct. 22, 2021	1 Year
15.	Power Sensor	DAER	RPR3006W	15I00041SN046	Oct. 22, 2021	1 Year
16.	MXA Spectrum Analysis	KEYSIGHT	N9020A	MY53280032	Oct. 22, 2021	1 Year
17.	MXG RF Vector Signal Generator	Agilent	N5182A	MY48180656	Oct. 22, 2021	1 Year
18.	Signal Generator	Agilent	E4421B	MY41000743	Oct. 22, 2021	1 Year
19.	DC Power Supply	IVYTECH	IV3605	1804D360510	Oct. 22, 2021	1 Year
20.	Constant Temperature Humidity Chamber	ZHONGJIAN	ZJ-KHWS80B	N/A	Oct. 22, 2021	1 Year

1.7. Measurement Uncertainty

Radiation Uncertainty	:	Ur = 3.9 dB (Horizontal)
		Ur = 3.8 dB (Vertical)
Conduction Uncertainty	:	Uc = 3.4 dB

1.8. Description of Test Facility

The test facility is recognized, certified, or accredited by the following organizations:

FCC-Registration No.: 184111

Shenzhen Anbotek Compliance Laboratory Limited, EMC Laboratory has been registered and fully described in a report filed with the (FCC) Federal Communications Commission. The acceptance letter from the FCC is maintained in our files. Registration No. 184111.

ISED-Registration No.: 8058A

Shenzhen Anbotek Compliance Laboratory Limited, EMC Laboratory has been registered and fully described in a report filed with the (ISED) Innovation, Science and Economic Development Canada. The acceptance letter from the ISED is maintained in our files. Registration 8058A.

Test Location

Shenzhen Anbotek Compliance Laboratory Limited.
1/F, Building D, Sogood Science and Technology Park, Sanwei community, Hangcheng Street, Bao'an District, Shenzhen, Guangdong, China.518102

2. Summary of Test Results

Standard Section	Test Item	Result
FCC Part 15, Paragraph 15.207	Conducted Emission Test	PASS
FCC Part 15, Paragraph 15.209(a)(f)	Spurious Emission	PASS
Part 15.203	Antenna Requirement	PASS

3. Conducted Emission Test

3.1. Test Standard and Limit

Test Standard	FCC Part15 Section 15.207		
Test Limit	Frequency	Maximum RF Line Voltage (dBuV)	
		Quasi-peak Level	Average Level
	150kHz~500kHz	66 ~ 56 *	56 ~ 46 *
	500kHz~5MHz	56	46
	5MHz~30MHz	60	50
Remark: (1) *Decreasing linearly with logarithm of the frequency. (2) The lower limit shall apply at the transition frequency.			

3.2. Test Setup

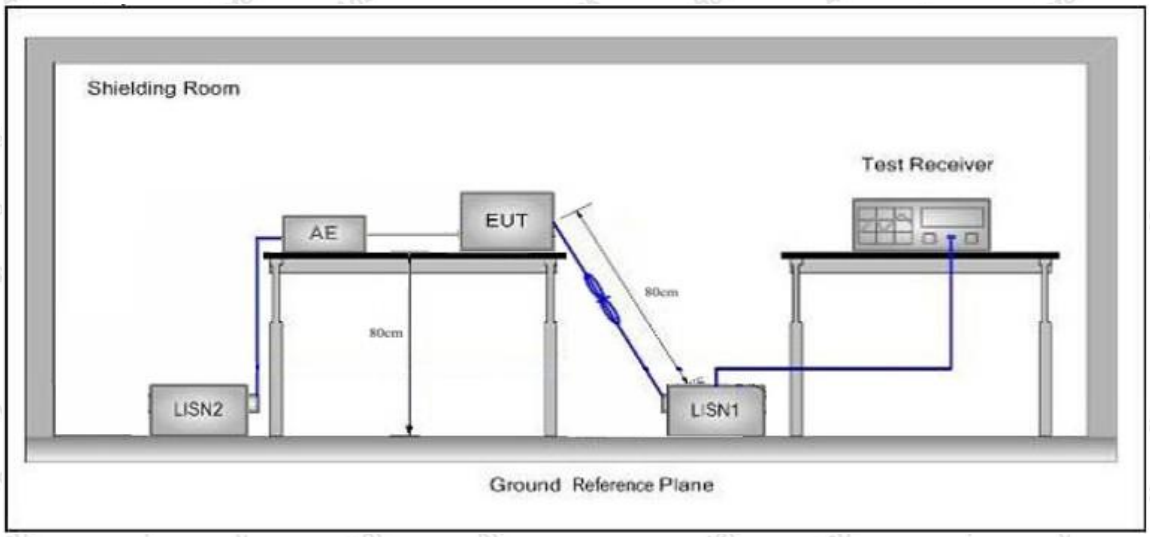

3.3. Test Procedure

The EUT system is connected to the power mains through a line impedance stabilization network (L.I.S.N.). This provides a 50ohm coupling impedance for the EUT system. Please refer the block diagram of the test setup and photographs. Both sides of AC line are checked to find out the maximum conducted emission. In order to find the maximum emission levels, the relative positions of equipment and all of the interface cables shall be changed according to FCC ANSI C63.10-2020 on Conducted Emission Measurement.

The bandwidth of test receiver (ESCI) set at 9kHz.

The frequency range from 150kHz to 30MHz is checked.

3.4. Test Data

Please to see the following pages

Conducted Emission Test Data

Test Site: 1# Shielded Room
Operating Condition: Mode 1
Test Specification: AC 240V, 60Hz for adapter
Comment: Live Line
Tem.: 23.2℃ Hum.: 48%

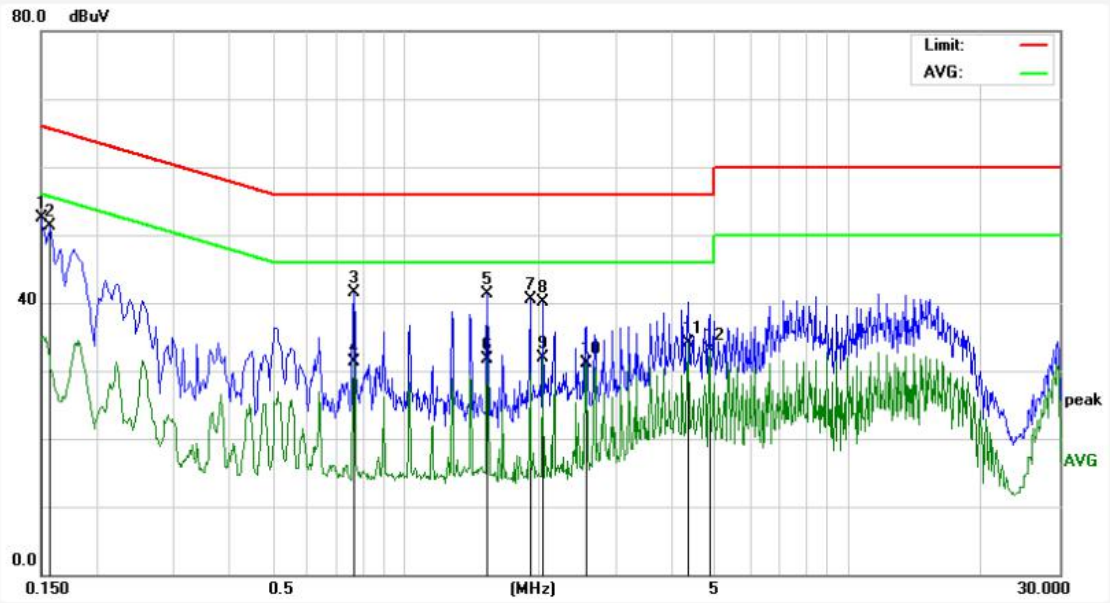

No.	Freq. (MHz)	Reading (dBuV)	Factor (dB)	Result (dBuV)	Limit (dBuV)	Over Limit (dB)	Detector	Remark
1	0.1499	52.36	0.11	52.47	66.00	-13.53	QP	
2	0.1580	51.16	0.12	51.28	65.56	-14.28	QP	
3	0.7660	41.32	0.15	41.47	56.00	-14.53	QP	
4	0.7660	31.19	0.15	31.34	46.00	-14.66	AVG	
5	1.5300	41.13	0.13	41.26	56.00	-14.74	QP	
6	1.5300	31.59	0.13	31.72	46.00	-14.28	AVG	
7	1.9099	40.41	0.12	40.53	56.00	-15.47	QP	
8	2.0419	39.99	0.12	40.11	56.00	-15.89	QP	
9	2.0419	31.75	0.12	31.87	46.00	-14.13	AVG	
10	2.5539	31.08	0.12	31.20	46.00	-14.80	AVG	
11	4.3379	34.08	0.11	34.19	46.00	-11.81	AVG	
12	4.8498	32.95	0.11	33.06	46.00	-12.94	AVG	

Conducted Emission Test Data

Test Site: 1# Shielded Room
Operating Condition: Mode 1
Test Specification: AC 240V, 60Hz for adapter
Comment: Neutral Line
Tem.: 23.2℃ Hum.: 48%

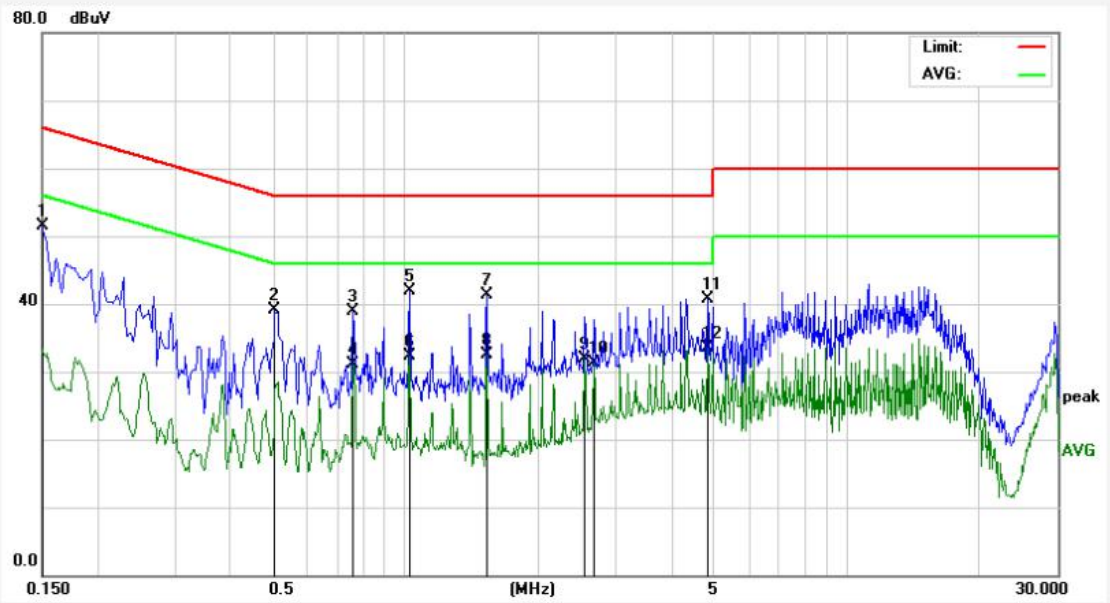

No.	Freq. (MHz)	Reading (dBuV)	Factor (dB)	Result (dBuV)	Limit (dBuV)	Over Limit (dB)	Detector	Remark
1	0.1499	51.46	0.11	51.57	66.00	-14.43	QP	
2	0.5060	38.92	0.15	39.07	56.00	-16.93	QP	
3	0.7620	38.74	0.15	38.89	56.00	-17.11	QP	
4	0.7620	31.01	0.15	31.16	46.00	-14.84	AVG	
5	1.0220	41.73	0.15	41.88	56.00	-14.12	QP	
6	1.0220	32.06	0.15	32.21	46.00	-13.79	AVG	
7	1.5300	41.13	0.13	41.26	56.00	-14.74	QP	
8	1.5300	32.31	0.13	32.44	46.00	-13.56	AVG	
9	2.5499	31.74	0.12	31.86	46.00	-14.14	AVG	
10	2.6779	31.19	0.12	31.31	46.00	-14.69	AVG	
11	4.8459	40.69	0.11	40.80	56.00	-15.20	QP	
12	4.8459	33.42	0.11	33.53	46.00	-12.47	AVG	

Conducted Emission Test Data

Test Site: 1# Shielded Room
Operating Condition: Mode 1
Test Specification: AC 120V, 60Hz for adapter
Comment: Live Line
Tem.: 23.2℃ Hum.: 48%

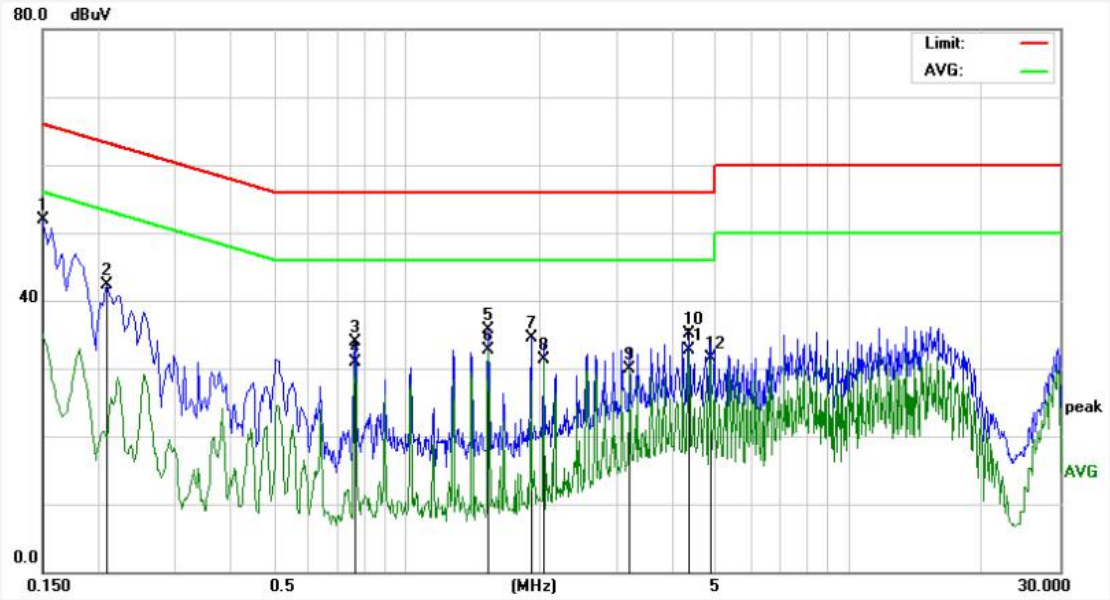

No.	Freq. (MHz)	Reading (dBuV)	Factor (dB)	Result (dBuV)	Limit (dBuV)	Over Limit (dB)	Detector	Remark
1	0.1500	51.86	0.11	51.97	65.99	-14.02	QP	
2	0.2100	42.23	0.12	42.35	63.20	-20.85	QP	
3	0.7660	33.82	0.15	33.97	56.00	-22.03	QP	
4	0.7660	30.69	0.15	30.84	46.00	-15.16	AVG	
5	1.5300	35.63	0.13	35.76	56.00	-20.24	QP	
6	1.5300	32.59	0.13	32.72	46.00	-13.28	AVG	
7	1.9100	34.41	0.12	34.53	56.00	-21.47	QP	
8	2.0420	31.25	0.12	31.37	46.00	-14.63	AVG	
9	3.1900	29.82	0.12	29.94	46.00	-16.06	AVG	
10	4.3380	34.97	0.11	35.08	56.00	-20.92	QP	
11	4.3380	32.58	0.11	32.69	46.00	-13.31	AVG	
12	4.8500	31.45	0.11	31.56	46.00	-14.44	AVG	

Conducted Emission Test Data

Test Site: 1# Shielded Room
Operating Condition: Mode 1
Test Specification: AC 120V, 60Hz for adapter
Comment: Neutral Line
Tem.: 23.2℃ Hum.: 48%

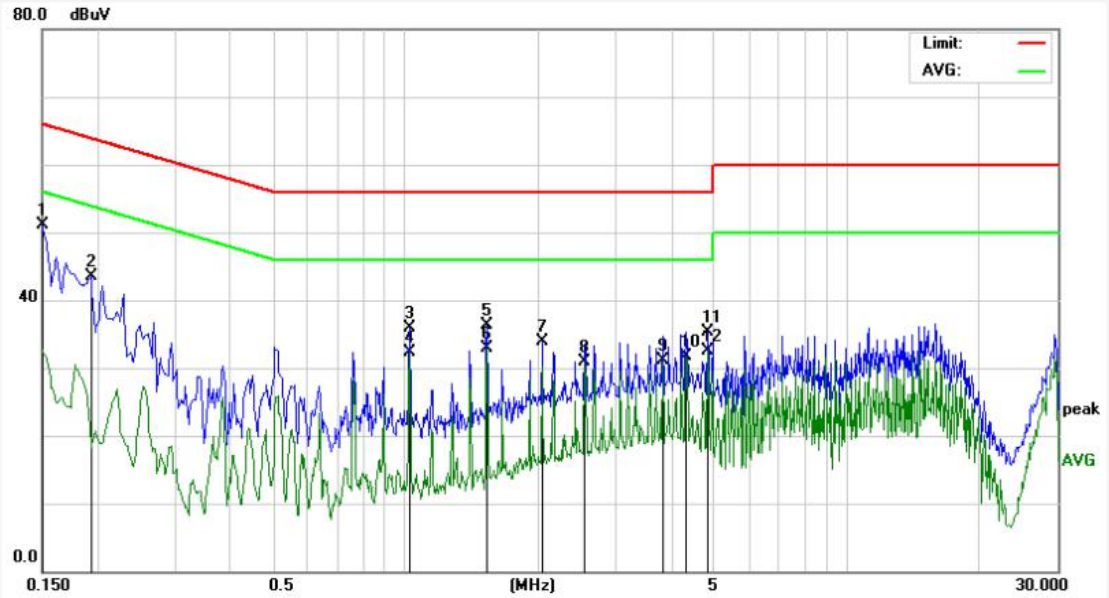

No.	Freq. (MHz)	Reading (dBuV)	Factor (dB)	Result (dBuV)	Limit (dBuV)	Over Limit (dB)	Detector	Remark
1	0.1500	50.96	0.11	51.07	65.99	-14.92	QP	
2	0.1940	43.46	0.12	43.58	63.86	-20.28	QP	
3	1.0220	35.73	0.15	35.88	56.00	-20.12	QP	
4	1.0220	32.06	0.15	32.21	46.00	-13.79	AVG	
5	1.5300	36.13	0.13	36.26	56.00	-19.74	QP	
6	1.5300	32.81	0.13	32.94	46.00	-13.06	AVG	
7	2.0420	33.76	0.12	33.88	56.00	-22.12	QP	
8	2.5500	30.74	0.12	30.86	46.00	-15.14	AVG	
9	3.8260	30.96	0.12	31.08	46.00	-14.92	AVG	
10	4.3340	31.55	0.11	31.66	46.00	-14.34	AVG	
11	4.8460	35.19	0.11	35.30	56.00	-20.70	QP	
12	4.8460	32.42	0.11	32.53	46.00	-13.47	AVG	

4. Radiation Spurious Emission

4.1. Test Standard and Limit

Test Standard	FCC Part15 C Section 15.209 and 15.205				
Test Limit	Frequency (MHz)	Field strength (microvolt/meter)	Limit (dBuV/m)	Remark	Measurement distance (m)
	0.009MHz~0.490MHz	2400/F(kHz)	-	-	300
	0.490MHz-1.705MHz	24000/F(kHz)	-	-	30
	1.705MHz-30MHz	30	-	-	30
	30MHz~88MHz	100	40.0	Quasi-peak	3
	88MHz~216MHz	150	43.5	Quasi-peak	3
	216MHz~960MHz	200	46.0	Quasi-peak	3
	960MHz~1000MHz	500	54.0	Quasi-peak	3
	Above 1000MHz	500	54.0	Average	3
		-	74.0	Peak	3

Remark:
(1)The lower limit shall apply at the transition frequency.
(2) 15.35(b), Unless otherwise specified, the limit on peak radio frequency emissions is 20dB above the maximum permitted average emission limit applicable to the equipment under test. This peak limit applies to the total peak emission level radiated by the device.

4.2. Test Setup

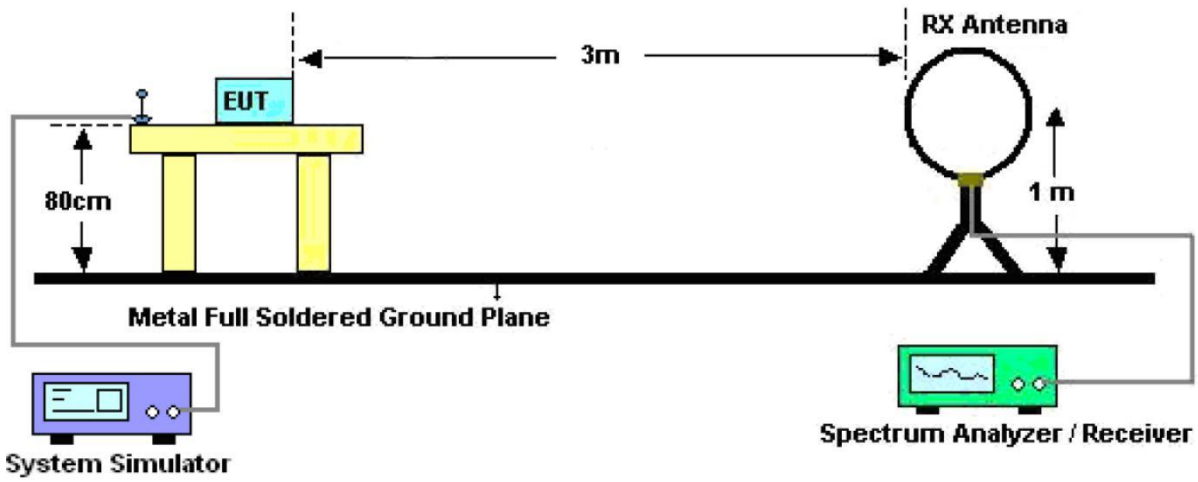

Figure 1. Below 30MHz

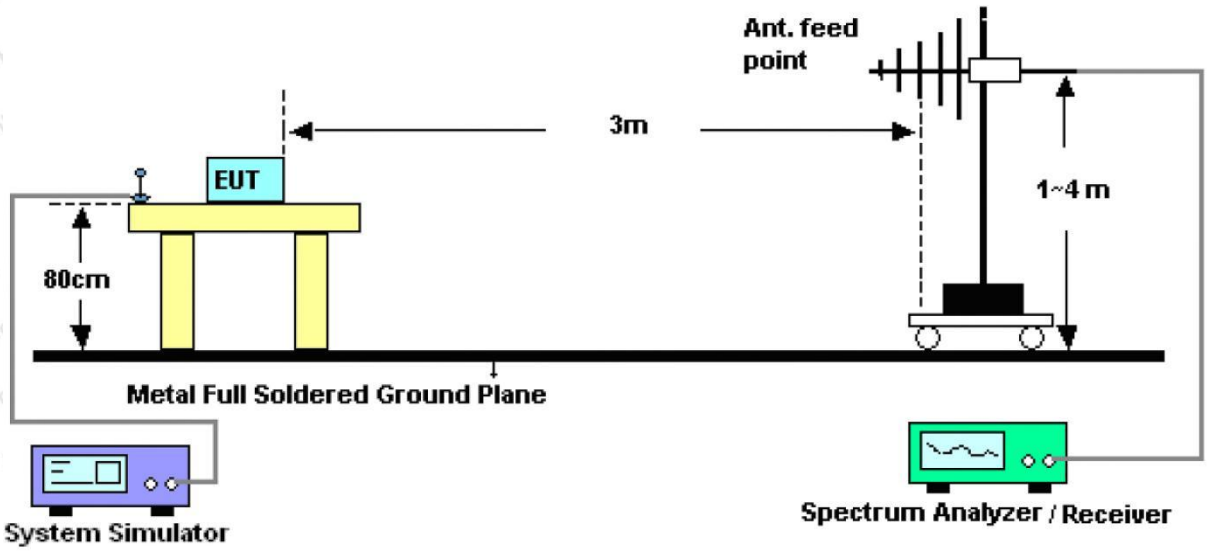

Figure 2. 30MHz to 1GHz

4.3. Test Procedure

For below 1GHz: The EUT is placed on a turntable, which is 0.8m above the ground plane.
The turn table can rotate 360 degrees to determine the position of the maximum emission level. The EUT is set 3 meters away from the receiving antenna which is mounted on a antenna tower. The antenna can be moved up and down from 1 to 4 meters to find out the maximum emission level. Rotated the EUT through three orthogonal axes to determine the maximum emissions, both horizontal and vertical polarization of the antenna are set on test. The EUT is tested in 9*6*6 Chamber. The device is evaluated in xyz orientation.

For 9kHz to 150kHz, Set the spectrum analyzer as:
RBW = 200Hz, VBW =1kHz, Detector= Quasi-Peak, Trace mode= Max hold, Sweep- auto couple.

For 150kHz to 30MHz, Set the spectrum analyzer as:
RBW = 9KHz, VBW =30kHz, Detector= Quasi-Peak, Trace mode= Max hold, Sweep- auto couple.

For 30MHz to 1000MHz, Set the spectrum analyzer as:
RBW = 100kHz, VBW =300kHz, Detector= Quasi-Peak, Trace mode= Max hold, Sweep- auto couple.

4.4. Test Data

PASS

Note: The data is in TX mode, and this is the worst mode.

Test Results

(Between 9KHz – 30MHz)

Standard:	**FCC PART15 C _3m**	**Power Source:**	**AC 120V, 60Hz for adapter**
Test item:	**Radiation Test**	**Temp.(C)/Hum.(%RH):**	**22.4℃/50%RH**
Test Mode:	**Mode 1**	**Distance:**	**3m**

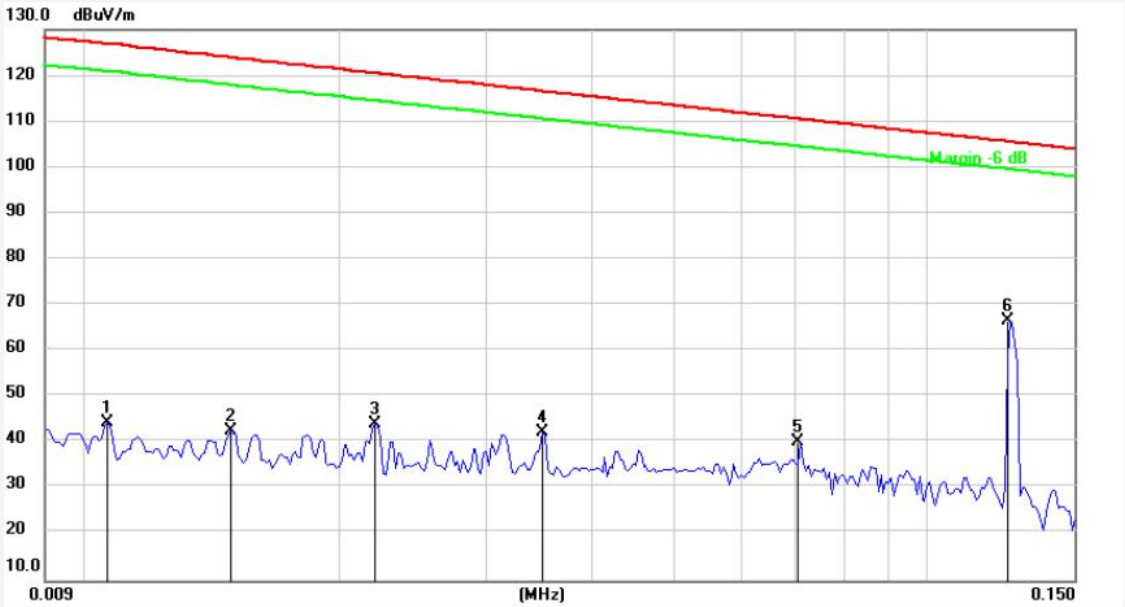

No.	Freq. (MHz)	Reading (dBuV)	Factor ()	Result (dBuV/m)	Limit (dBuV/m)	Over Limit (dB)	Detector	Height (cm)	degree (deg)	Remark
1	0.0106	24.33	20.07	44.40	126.89	-82.49	AV			
2	0.0149	22.33	20.29	42.62	123.95	-81.33	AV			
3	0.0221	23.66	20.34	44.00	120.55	-76.55	AV			
4	0.0350	21.66	20.49	42.15	116.58	-74.43	AV			
5	0.0704	19.90	20.37	40.27	110.55	-70.28	AV			
6	0.1247	46.13	20.34	66.47	105.61	-39.14	AV			

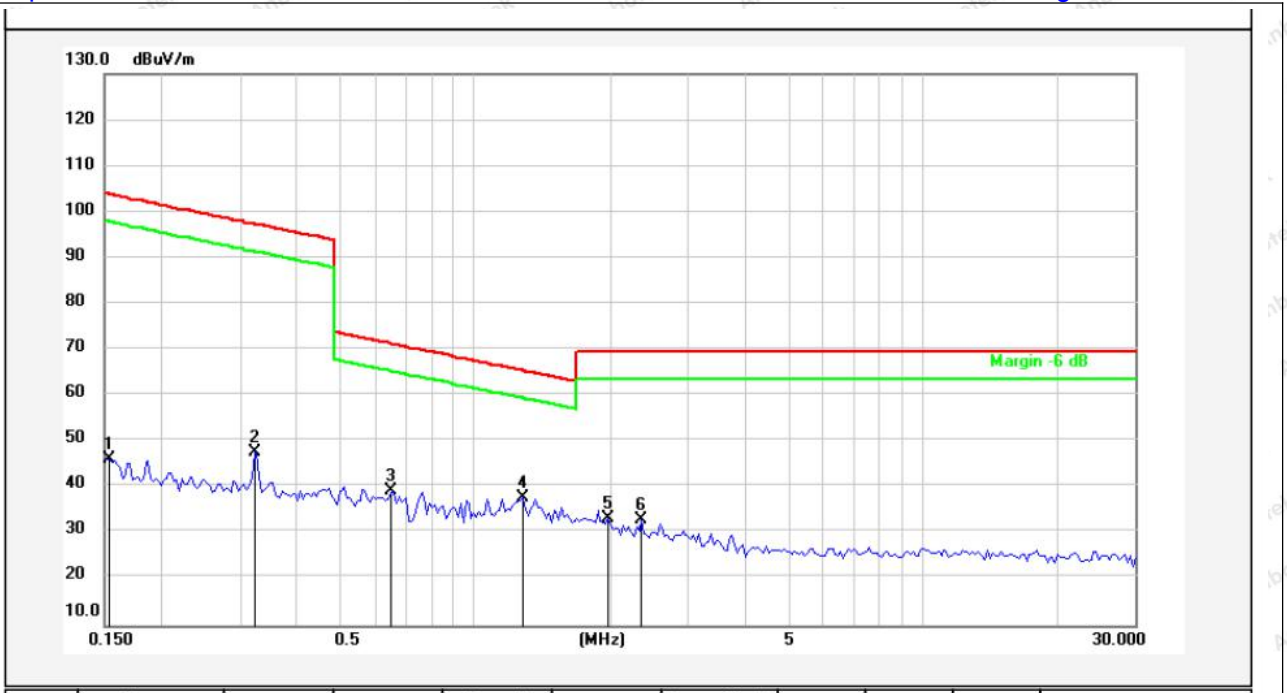

No.	Freq. (MHz)	Reading (dBuV)	Factor ()	Result (dBuV/m)	Limit (dBuV/m)	Over Limit (dB)	Detector	Height (cm)	degree (deg)	Remark
1	0.1539	25.95	20.33	46.28	103.80	-57.52	AV			
2	0.3234	27.35	20.29	47.64	97.39	-49.75	AV			
3	0.6522	18.84	20.26	39.10	71.32	-32.22	QP			
4	1.2822	17.40	20.26	37.66	65.47	-27.81	QP			
5	1.9854	12.88	20.28	33.16	69.50	-36.34	QP			
6	2.3584	12.66	20.29	32.95	69.50	-36.55	QP			

Remark： According to FCC PART 15.209 (d), the emission limits for the frequency bands 9–90 kHz, 110–490 kHz and above 1000 MHz, Radiated emission limits in these three bands are based on measurements employing an average detector.

(Between 30MHz –1000 MHz)

Standard:	**FCC PART15 C _3m**	**Polarization:**	**Horizontal**
Test item:	**Radiation Test**	**Power Source:**	**AC 120V, 60Hz for adapter**
Test Mode:	**Mode 1**	**Temp.(C)/Hum.(%RH):**	**23.4℃/50%RH**
Distance:	**3m**		

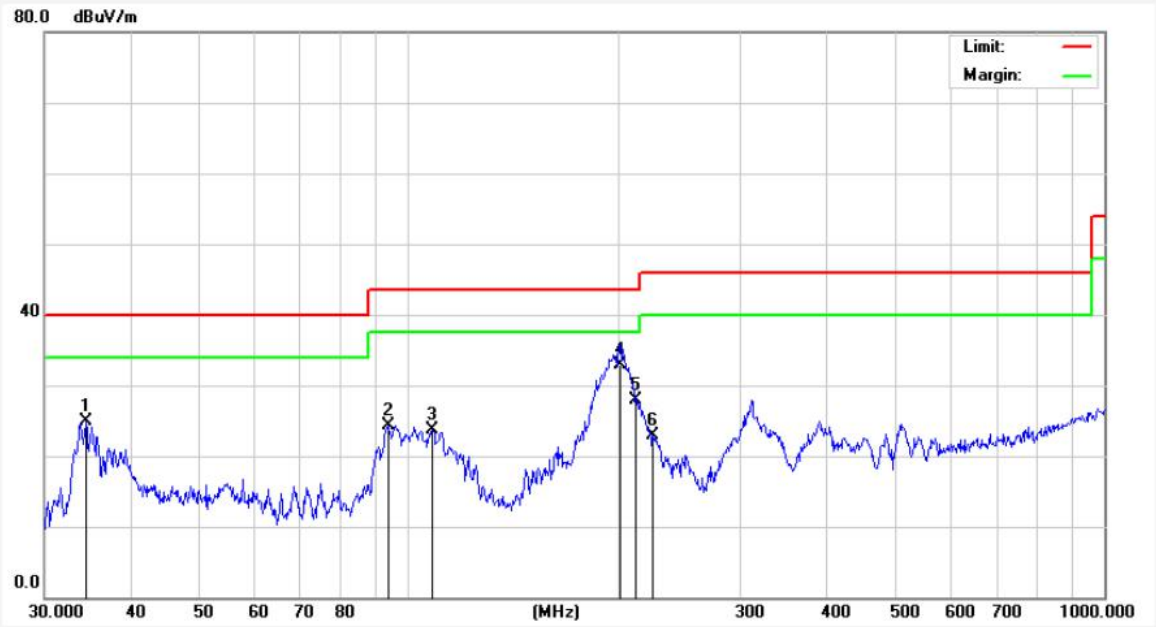

No.	Freq. (MHz)	Reading (dBuV)	Factor (dB/m)	Result (dBuV/m)	Limit (dBuV/m)	Over Limit (dB)	Detector	Height (cm)	degree (deg)	Remark
1	34.3964	43.67	-18.67	25.00	40.00	-15.00	QP			
2	93.4402	46.20	-21.95	24.25	43.50	-19.25	QP			
3	108.2667	46.64	-22.86	23.78	43.50	-19.72	QP			
4	201.3930	55.22	-22.31	32.91	43.50	-10.59	QP			
5	212.2695	50.09	-22.12	27.97	43.50	-15.53	QP			
6	224.5193	44.79	-21.92	22.87	46.00	-23.13	QP			

Standard:	**FCC PART15 C _3m**	**Polarization:**	**Vertical**
Test item:	**Radiation Test**	**Power Source:**	**AC 120V, 60Hz for adapter**
Test Mode:	**Mode 1**	**Temp.(C)/Hum.(%RH):**	**23.4℃/50%RH**
Distance:	**3m**		

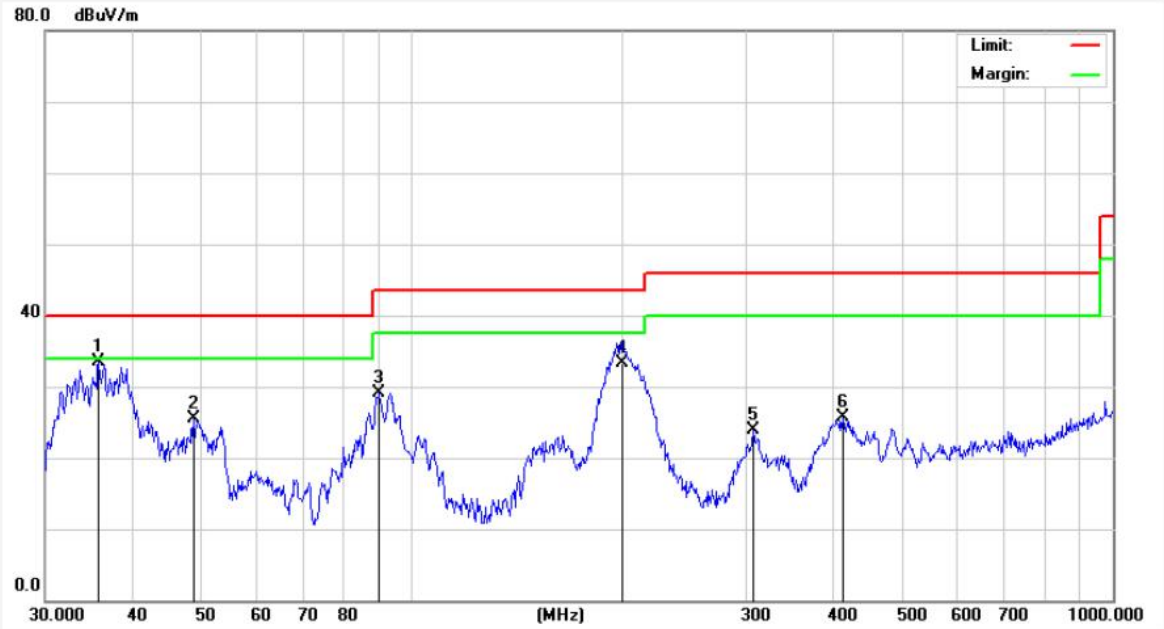

No.	Freq. (MHz)	Reading (dBuV)	Factor (dB/m)	Result (dBuV/m)	Limit (dBuV/m)	Over Limit (dB)	Detector	Height (cm)	degree (deg)	Remark
1	35.7490	50.19	-16.76	33.43	40.00	-6.57	QP			
2	48.8429	41.19	-15.60	25.59	40.00	-14.41	QP			
3	89.9047	46.77	-17.59	29.18	43.50	-14.32	QP			
4	199.2855	52.98	-19.69	33.29	43.50	-10.21	QP			
5	306.7537	39.97	-16.09	23.88	46.00	-22.12	QP			
6	411.8240	39.92	-14.26	25.66	46.00	-20.34	QP			

5. Antenna Requirement

5.1. Test Standard and Requirement

Test Standard	FCC Part15 Section 15.203
Requirement	An intentional radiator shall be designed to ensure that no antenna other than that furnished by the responsible party shall be used with the device. The use of a permanently attached antenna or of an antenna that uses a unique coupling to the intentional radiator, the manufacturer may design the unit so that a broken antenna can be replaced by the user, but the use of a standard antenna jack or electrical connector is prohibited.

5.2. Antenna Connected Construction

The antenna is a Inductive loop coil Antenna which permanently attached, and the best case gain of the antenna is 0 dBi. It complies with the standard requirement.

APPENDIX I -- TEST SETUP PHOTOGRAPH

Please refer to separated files for Test Setup Photos of the EUT.

APPENDIX II -- EXTERNAL PHOTOGRAPH

Please refer to separated files for External Photos of the EUT.

APPENDIX III -- INTERNAL PHOTOGRAPH

Please refer to separated files for Internal Photos of the EUT.

---------- End of Report ----------