2.2.3 BT-antenna efficiency and gain

Passive Test For 2400MHz~2500MHz				
Freq	Effi	Effi	Gain	
(MHz)	(%)	(dB)	(dBi)	
2400	51.8%	-2.86	1.75	
2410	52.6%	-2.79	1.88	
2420	53.8%	-2.69	1.91	
2430	54.1%	-2.67	2.24	
2440	54.6%	-2.63	2.37	
2450	55.8%	-2.53	2.45	
2460	54.7%	-2.62	2.32	
2470	53.2%	-2.74	2.16	
2480	52.4%	-2.81	1.87	
2490	52.8%	-2.77	1.93	
2500	51.9%	-2.85	1.83	

2.2.4 Radiation Pattern For BT Antenna（2450MHz），Peak Gain：2.45dbi

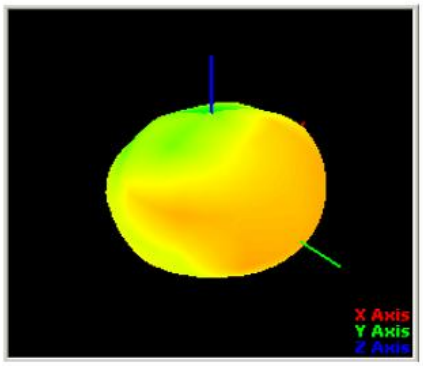

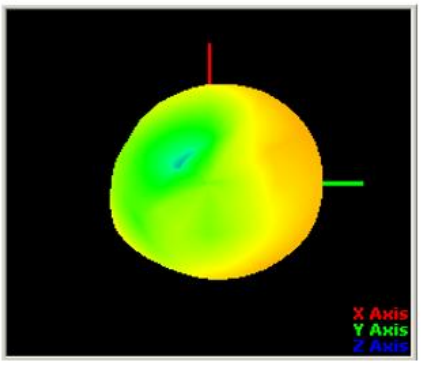

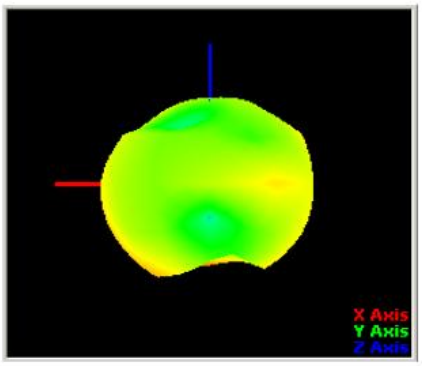

2.2.5 Antenna passive parameters-BT direction diagram

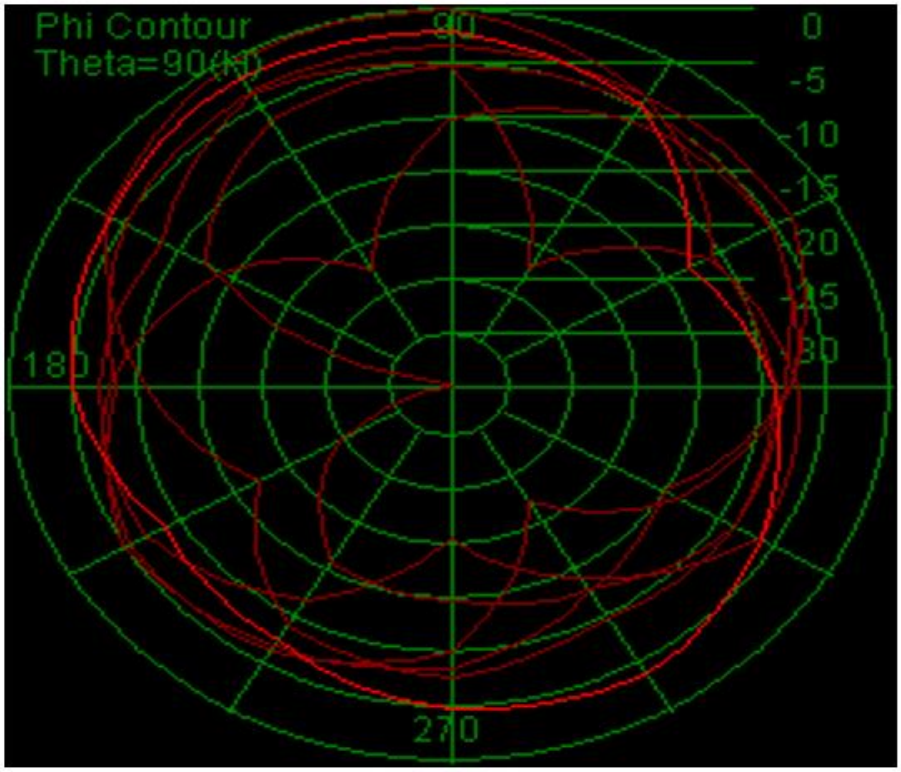

MIN= -6.93

2.2.6 Active parameters of BT antenna

Test	BT		
Result	1	39	78
TRP (dBm)	7.20	6.71	6.85
TIS (dBm)	-89.04	-89.25	-89.14

2.4 Antenna design-Dipole

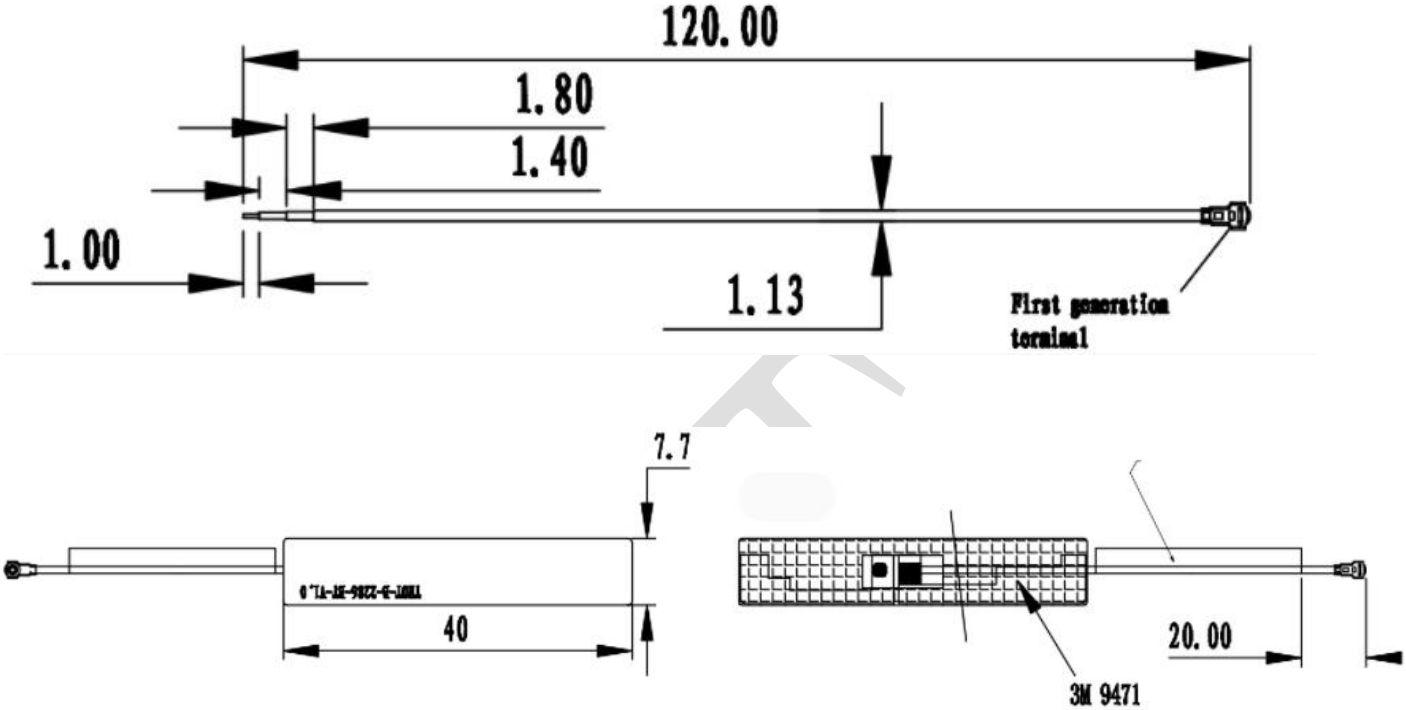

2.5 active parameters of BT antenna (0 channel)

Bluetooth, Channel 0, TRP

		0	30	60	90	120	150	180	210	240	270	300	330	360
H+V Total (30° Step)	0	-4.33	-4.33	-4.07	-4.07	2.13	2.13	--	--	--	--	--	--	--
	30	-4.33	-4.33	-4.07	-4.07	2.13	2.13	4.98	4.98	2.01	2.01	-4.86	-4.86	--
	60	-3.94	-1.78	0.46	5.62	10.30	11.65	11.43	11.86	11.90	9.02	3.38	1.23	--
	90	-3.32	-1.65	-2.73	7.97	12.05	10.16	10.08	12.07	12.76	12.38	7.22	0.25	--
	120	-3.01	-3.91	0.36	9.13	11.98	11.53	12.39	12.09	12.41	12.03	7.04	-3.83	--
	150	-0.03	-0.03	2.13	2.13	11.16	11.16	11.60	11.60	10.84	10.84	4.55	4.55	--
	180	-0.03	-0.03	2.13	2.13	11.16	11.16	--	--	--	--	--	--	--

		0	30	60	90	120	150	180	210	240	270	300	330	360
H (30° Step)	0	-7.69	-7.69	-7.65	-7.65	-0.14	-0.14	--	--	--	--	--	--	--
	30	-7.69	-7.69	-7.65	-7.65	-0.14	-0.14	4.47	4.47	1.15	1.15	-5.10	-5.10	--
	60	-8.56	-3.28	-14.27	4.11	10.23	11.30	10.39	11.41	11.72	8.71	2.56	0.21	--
	90	-4.97	-5.70	-3.78	7.76	13.01	9.33	9.03	11.88	12.69	12.27	7.10	-0.71	--
	120	-3.40	-4.99	-0.21	8.98	12.66	9.83	11.09	12.77	12.38	11.90	6.62	-5.60	--
	150	-0.06	-0.06	1.95	1.95	10.53	10.53	9.84	9.84	10.60	10.60	2.18	2.18	--
	180	-0.06	-0.06	1.95	1.95	10.53	10.53	--	--	--	--	--	--	--

		0	30	60	90	120	150	180	210	240	270	300	330	360
V (30° Step)	0	-7.02	-7.02	-6.57	-6.57	-1.78	-1.78	--	--	--	--	--	--	--
	30	-7.02	-7.02	-6.57	-6.57	-1.78	-1.78	-4.59	-4.59	-5.43	-5.43	-17.61	-17.61	--
	60	-5.78	-7.14	0.31	0.31	-7.80	0.58	4.73	1.79	-2.13	-2.56	-4.25	-5.56	--
	90	-8.33	-3.82	-9.39	-5.19	-7.19	2.54	3.38	-1.53	-5.38	-3.77	-8.51	-6.77	--
	120	-13.71	-10.50	-8.76	-5.61	1.56	6.62	6.52	1.58	-7.70	-2.39	-3.27	-8.57	--
	150	-21.95	-21.95	-11.70	-11.70	2.46	2.46	6.83	6.83	-1.93	-1.93	0.80	0.80	--
	180	-21.95	-21.95	-11.70	-11.70	2.46	2.46	--	--	--	--	--	--	--

Bluetooth, Channel 0, TIS

		0	30	60	90	120	150	180	210	240	270	300	330	360
H+V Total (30° Step)	0	-80.59	-80.59	-80.85	-80.85	-87.05	-87.05	--	--	--	--	--	--	--
	30	-80.59	-80.59	-80.85	-80.85	-87.05	-87.05	-89.90	-89.90	-86.93	-86.93	-80.06	-80.06	--
	60	-80.98	-83.14	-85.38	-90.54	-95.22	-96.57	-96.35	-93.78	-96.82	-93.94	-88.30	-86.15	--
	90	-81.60	-83.27	-82.19	-92.89	-91.97	-93.08	-95.00	-94.99	-93.68	-93.30	-92.14	-85.17	--
	120	-81.91	-81.01	-85.28	-90.05	-91.90	-93.45	-94.31	-94.01	-94.33	-93.95	-91.96	-81.09	--
	150	-84.89	-84.89	-87.05	-87.05	-91.08	-92.08	-93.52	-93.52	-93.76	-92.76	-89.47	-89.47	--
	180	-84.89	-84.89	-87.05	-87.05	-90.08	-90.08	--	--	--	--	--	--	--

		0	30	60	90	120	150	180	210	240	270	300	330	360
H (30° Step)	0	-77.23	-77.23	-77.27	-77.27	-84.78	-84.78	--	--	--	--	--	--	--
	30	-77.23	-77.23	-77.27	-77.27	-84.78	-84.78	-89.39	-89.39	-86.07	-86.07	-79.82	-79.82	--
	60	-76.36	-81.64	-70.65	-89.03	-92.15	-93.22	-92.31	-96.33	-92.64	-93.63	-87.48	-85.13	--
	90	-79.95	-79.22	-81.14	-92.68	-94.93	-94.25	-93.95	-96.80	-91.61	-92.19	-92.02	-84.21	--
	120	-81.52	-79.93	-84.71	-93.90	-91.58	-94.75	-92.01	-92.69	-93.30	-92.82	-91.54	-79.32	--
	150	-84.86	-84.86	-86.87	-86.87	-91.45	-93.45	-92.76	-92.76	-91.52	-93.52	-87.10	-87.10	--
	180	-84.86	-84.86	-86.87	-86.87	-93.45	-91.45	--	--	--	--	--	--	--

		0	30	60	90	120	150	180	210	240	270	300	330	360
V (30° Step)	0	-77.90	-77.90	-78.35	-78.35	-83.14	-83.14	--	--	--	--	--	--	--
	30	-77.90	-77.90	-78.35	-78.35	-83.14	-83.14	-80.33	-80.33	-79.49	-79.49	-67.31	-67.31	--
	60	-79.14	-77.78	-85.23	-85.23	-77.12	-85.50	-89.65	-86.71	-82.79	-82.36	-80.67	-79.36	--
	90	-76.59	-81.10	-75.53	-79.73	-77.73	-87.46	-88.30	-83.39	-79.54	-81.15	-76.41	-78.15	--
	120	-71.21	-74.42	-76.16	-79.31	-86.48	-91.54	-91.44	-86.50	-77.22	-82.53	-81.65	-76.35	--
	150	-62.97	-62.97	-73.22	-73.22	-87.38	-87.38	-91.75	-91.75	-82.99	-82.99	-85.72	-85.72	--
	180	-62.97	-62.97	-73.22	-73.22	-87.38	-87.38	--	--	--	--	--	--	--

2.6 active parameters of BT antenna (39 cannel)

Bluetooth, Channel 39, TRP

		0	30	60	90	120	150	180	210	240	270	300	330	360
H+V Total (30° Step)	0	-6.13	-6.13	-4.79	-4.79	2.54	2.54	--	--	--	--	--	--	--
	30	-6.13	-6.13	-4.79	-4.79	2.54	2.54	5.75	5.75	3.77	3.77	-4.64	-4.64	--
	60	-6.73	-0.78	-1.31	4.19	9.51	10.42	10.42	11.69	11.54	8.23	2.65	-1.07	--
	90	-5.41	-1.97	-3.39	6.26	10.59	8.12	11.09	13.61	11.98	11.65	6.55	-3.48	--
	120	-4.69	-5.37	-1.78	7.86	12.22	10.10	11.43	12.06	11.62	12.31	5.24	-7.73	--
	150	-2.79	-2.79	0.59	0.59	10.32	10.32	10.22	10.22	10.97	10.97	4.22	4.22	--
	180	-2.79	-2.79	0.59	0.59	10.32	10.32	--	--	--	--	--	--	--

		0	30	60	90	120	150	180	210	240	270	300	330	360
H (30° Step)	0	-7.86	-7.86	-16.84	-16.84	0.91	0.91	--	--	--	--	--	--	--
	30	-7.86	-7.86	-16.84	-16.84	0.91	0.91	5.52	5.52	3.09	3.09	-6.65	-6.65	--
	60	-14.39	-2.73	-11.61	2.32	9.49	10.01	9.16	11.34	11.45	8.05	1.73	-2.16	--
	90	-6.76	-4.58	-4.99	6.03	10.57	6.49	11.54	11.51	11.85	11.46	6.45	-4.64	--
	120	-5.73	-5.41	-2.16	7.75	11.79	7.54	11.32	11.96	11.60	12.16	4.81	-8.59	--
	150	-3.01	-3.01	-0.29	-0.29	9.16	9.16	8.68	8.68	10.74	10.74	1.82	1.82	--
	180	-3.01	-3.01	-0.29	-0.29	9.16	9.16	--	--	--	--	--	--	--

		0	30	60	90	120	150	180	210	240	270	300	330	360
V (30° Step)	0	-10.96	-10.96	-5.07	-5.07	-2.50	-2.50	--	--	--	--	--	--	--
	30	-10.96	-10.96	-5.07	-5.07	-2.50	-2.50	-7.03	-7.03	-4.61	-4.61	-8.94	-8.94	--
	60	-7.55	-5.19	-1.73	-0.38	-14.87	-0.07	4.42	0.64	-5.24	-5.68	-4.55	-7.60	--
	90	-11.13	-5.43	-8.50	-6.52	-12.66	3.08	2.81	-2.83	-2.23	-1.99	-9.80	-9.78	--
	120	-11.39	-26.30	-12.59	-8.33	1.97	6.58	5.95	-2.56	-10.66	-2.41	-5.06	-15.20	--
	150	-15.81	-15.81	-6.80	-6.80	4.02	4.02	4.97	4.97	-1.91	-1.91	0.49	0.49	--
	180	-15.81	-15.81	-6.80	-6.80	4.02	4.02	--	--	--	--	--	--	--

Bluetooth, Channel 39, TIS

		0	30	60	90	120	150	180	210	240	270	300	330	360
H+V Total (30° Step)	0	-79.98	-79.98	-81.32	-81.32	-88.65	-88.65	--	--	--	--	--	--	--
	30	-79.98	-79.98	-81.32	-81.32	-88.65	-88.65	-91.86	-91.86	-89.88	-89.88	-81.47	-81.47	--
	60	-79.38	-85.33	-84.80	-90.30	-91.62	-93.53	-92.53	-92.80	-92.65	-91.34	-88.76	-85.04	--
	90	-80.70	-84.14	-82.72	-92.37	-91.70	-91.23	-92.20	-91.72	-92.09	-92.76	-92.66	-82.63	--
	120	-81.42	-80.74	-84.33	-93.97	-91.33	-92.21	-93.54	-92.17	-92.73	-91.42	-91.35	-78.38	--
	150	-83.32	-83.32	-86.70	-86.70	-91.43	-92.43	-92.33	-91.33	-92.08	-92.08	-90.33	-90.33	--
	180	-83.32	-83.32	-86.70	-86.70	-91.43	-91.43	--	--	--	--	--	--	--

		0	30	60	90	120	150	180	210	240	270	300	330	360
H (30° Step)	0	-78.25	-78.25	-69.27	-69.27	-87.02	-87.02	--	--	--	--	--	--	--
	30	-78.25	-78.25	-69.27	-69.27	-87.02	-87.02	-91.63	-91.63	-89.20	-89.20	-79.46	-79.46	--
	60	-71.72	-83.38	-74.50	-88.43	-93.60	-91.12	-92.27	-91.45	-91.56	-92.16	-87.84	-83.95	--
	90	-79.35	-81.53	-81.12	-92.14	-92.68	-92.60	-92.65	-92.62	-91.96	-91.57	-92.56	-81.47	--
	120	-80.38	-80.70	-83.95	-93.86	-91.90	-93.65	-97.43	-93.07	-91.71	-92.27	-90.92	-77.52	--
	150	-83.10	-83.10	-85.82	-85.82	-95.27	-95.27	-94.79	-91.79	-92.85	-91.85	-87.93	-87.93	--
	180	-83.10	-83.10	-85.82	-85.82	-95.27	-95.27	--	--	--	--	--	--	--

		0	30	60	90	120	150	180	210	240	270	300	330	360
V (30° Step)	0	-75.15	-75.15	-81.04	-81.04	-83.61	-83.61	--	--	--	--	--	--	--
	30	-75.15	-75.15	-81.04	-81.04	-83.61	-83.61	-79.08	-79.08	-81.50	-81.50	-77.17	-77.17	--
	60	-78.56	-80.92	-84.38	-85.73	-71.24	-86.04	-90.53	-86.75	-80.87	-80.43	-81.56	-78.51	--
	90	-74.98	-80.68	-77.61	-79.59	-73.45	-89.19	-88.92	-83.28	-83.88	-84.12	-76.31	-76.33	--
	120	-74.72	-59.81	-73.52	-77.78	-88.08	-92.69	-92.06	-83.55	-75.45	-83.70	-81.05	-70.91	--
	150	-70.30	-70.30	-79.31	-79.31	-90.13	-90.13	-91.08	-91.08	-84.20	-84.20	-86.60	-86.60	--
	180	-70.30	-70.30	-79.31	-79.31	-90.13	-90.13	--	--	--	--	--	--	--

2.7 Active parameters of BT antenna (78 channel)

Bluetooth, Channel 78, TRP

		0	30	60	90	120	150	180	210	240	270	300	330	360
H+V Total (30° Step)	0	-10.60	-10.60	-4.76	-4.76	1.60	1.60	--	--	--	--	--	--	--
	30	-10.60	-10.60	-4.76	-4.76	1.60	1.60	4.31	4.31	2.43	2.43	-5.43	-5.43	--
	60	-8.10	-2.12	-3.36	2.59	7.06	8.66	8.47	10.07	10.13	6.99	1.62	-4.01	--
	90	-11.03	-4.71	-3.01	3.97	8.17	6.75	11.77	13.11	12.24	10.30	4.40	-6.85	--
	120	-9.34	-7.44	-5.73	5.78	10.08	9.29	12.26	11.59	12.50	10.72	3.75	-5.05	--
	150	-4.18	-4.18	-3.67	-3.67	7.72	7.72	8.23	8.23	9.42	9.42	2.89	2.89	--
	180	-4.18	-4.18	-3.67	-3.67	7.72	7.72	--	--	--	--	--	--	--

		0	30	60	90	120	150	180	210	240	270	300	330	360
H (30° Step)	0	-10.67	-10.67	-13.90	-13.90	-0.24	-0.24	--	--	--	--	--	--	--
	30	-10.67	-10.67	-13.90	-13.90	-0.24	-0.24	4.12	4.12	1.82	1.82	-11.98	-11.98	--
	60	-14.61	-4.29	-8.11	0.76	7.03	8.20	7.27	9.72	10.09	6.81	0.81	-5.46	--
	90	-15.33	-6.74	-3.85	3.61	8.09	5.22	11.33	13.06	12.09	9.94	4.19	-7.30	--
	120	-11.95	-7.46	-5.79	5.69	9.47	6.87	11.58	13.55	12.49	10.53	3.55	-5.45	--
	150	-4.65	-4.65	-4.37	-4.37	6.40	6.40	6.36	6.36	9.18	9.18	-0.86	-0.86	--
	180	-4.65	-4.65	-4.37	-4.37	6.40	6.40	--	--	--	--	--	--	--

		0	30	60	90	120	150	180	210	240	270	300	330	360
V (30° Step)	0	-28.73	-28.73	-5.33	-5.33	-3.01	-3.01	--	--	--	--	--	--	--
	30	-28.73	-28.73	-5.33	-5.33	-3.01	-3.01	-9.46	-9.46	-6.37	-6.37	-6.52	-6.52	--
	60	-9.20	-6.17	-5.13	-2.05	-15.23	-1.35	2.29	-1.08	-10.09	-6.89	-6.10	-9.49	--
	90	-13.05	-8.98	-10.55	-7.08	-8.98	1.49	1.62	-6.43	-2.43	-0.67	-8.96	-16.89	--
	120	-12.80	-30.24	-24.28	-10.99	1.23	5.60	3.90	-6.63	-12.36	-2.88	-9.78	-15.65	--
	150	-14.05	-14.05	-11.96	-11.96	1.90	1.90	3.68	3.68	-3.26	-3.26	0.52	0.52	--
	180	-14.05	-14.05	-11.96	-11.96	1.90	1.90	--	--	--	--	--	--	--

Bluetooth, Channel 78, TIS

		0	30	60	90	120	150	180	210	240	270	300	330	360
H+V Total (30° Step)	0	-75.46	-75.46	-81.30	-81.30	-87.66	-87.66	--	--	--	--	--	--	--
	30	-75.46	-75.46	-81.30	-81.30	-87.66	-87.66	-90.37	-90.37	-88.49	-88.49	-80.63	-80.63	--
	60	-77.96	-83.94	-82.70	-88.65	-93.12	-91.72	-91.53	-92.13	-91.19	-93.05	-87.68	-82.05	--
	90	-75.03	-81.35	-83.05	-90.03	-94.23	-92.81	-92.83	-93.17	-92.30	-96.36	-90.46	-79.21	--
	120	-76.72	-78.62	-80.33	-91.84	-92.14	-92.35	-91.32	-93.65	-91.56	-91.78	-89.81	-81.01	--
	150	-81.88	-81.88	-82.39	-82.39	-93.78	-93.78	-91.29	-91.29	-91.48	-91.48	-88.95	-88.95	--
	180	-81.88	-81.88	-82.39	-82.39	-93.78	-93.78	--	--	--	--	--	--	--

		0	30	60	90	120	150	180	210	240	270	300	330	360
H (30° Step)	0	-75.39	-75.39	-72.16	-72.16	-85.82	-85.82	--	--	--	--	--	--	--
	30	-75.39	-75.39	-72.16	-72.16	-85.82	-85.82	-90.18	-90.18	-87.88	-87.88	-74.08	-74.08	--
	60	-71.45	-81.77	-77.95	-86.82	-91.09	-91.26	-93.33	-92.78	-92.15	-92.87	-86.87	-80.60	--
	90	-70.73	-79.32	-82.21	-89.67	-91.15	-91.28	-92.39	-92.12	-91.15	-92.00	-90.25	-78.76	--
	120	-74.11	-78.60	-80.27	-91.75	-92.53	-92.93	-91.64	-92.61	-91.55	-92.59	-89.61	-80.61	--
	150	-81.41	-81.41	-81.69	-81.69	-92.46	-92.46	-92.42	-92.42	-91.24	-91.24	-85.20	-85.20	--
	180	-81.41	-81.41	-81.69	-81.69	-92.46	-92.46	--	--	--	--	--	--	--

		0	30	60	90	120	150	180	210	240	270	300	330	360
V (30° Step)	0	-57.33	-57.33	-80.73	-80.73	-83.05	-83.05	--	--	--	--	--	--	--
	30	-57.33	-57.33	-80.73	-80.73	-83.05	-83.05	-76.60	-76.60	-79.69	-79.69	-79.54	-79.54	--
	60	-76.86	-79.89	-80.93	-84.01	-70.83	-84.71	-88.35	-84.98	-75.97	-79.17	-79.96	-76.57	--
	90	-73.01	-77.08	-75.51	-78.98	-77.08	-87.55	-87.68	-79.63	-83.63	-85.39	-77.10	-69.17	--
	120	-73.26	-55.82	-61.78	-75.07	-87.29	-91.66	-89.96	-79.43	-73.70	-83.18	-76.28	-70.41	--
	150	-72.01	-72.01	-74.10	-74.10	-87.96	-87.96	-89.74	-89.74	-82.80	-82.80	-86.58	-86.58	--
	180	-72.01	-72.01	-74.10	-74.10	-87.96	-87.96	--	--	--	--	--	--	--
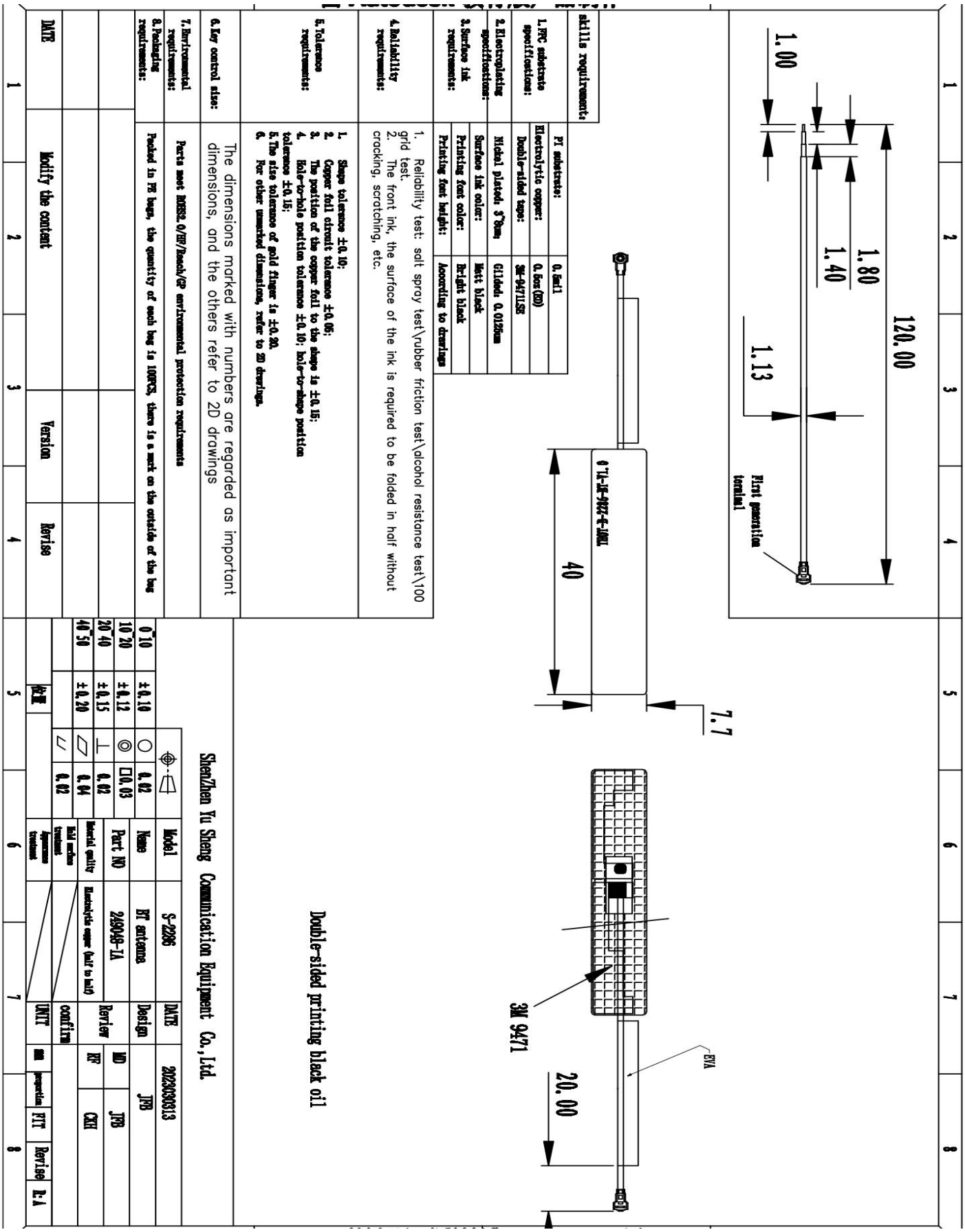
3. structural drawings