intertek
Total Quality. Assured.

Anker Innovations Limited

TEST REPORT

SCOPE OF WORK
FCC TESTING– E6801HQ1

REPORT NUMBER
260824006SZN-005

ISSUE DATE	**[REVISED DATE]**
Oct. 19, 2026	[----------]

PAGES
42

DOCUMENT CONTROL NUMBER
FCC SAR_b
© 2017 INTERTEK

101, 201, Building B, No. 308 Wuhe Avenue, Zhangkengjing Community,
GuanHu Subdistrict, LongHua District, Shenzhen, P.R. China.

Tel: (86 755) 8601 6288
Fax: (86 755) 8601 6751
www.intertek.com

Total Quality. Assured.
TEST REPORT

Intertek Report No.: 260824006SZN-005

SAR TEST REPORT

Applicant:	Anker Innovations Limited
Address of Applicant:	Unit 56, 8th Floor, Tower 2, Admiralty Centre,18 Harcourt Road, Hong Kong
Equipment Under Test (EUT)	
Product Name:	Wireless data terminal
Model No.:	E6801HQ1
Trademark:	Anker
FCC ID:	2AOKB-E6801HQ1
Applicable Standards:	FCC CFR Title 47 Part 2 (§2.1093)
Date of Test:	Sep. 07, 2026 to Sep. 09, 2026
Test Result:	PASS

Prepared and Checked by:

Tony Tang
Engineer

Approved by:

Johnny Wang
Project Engineer
Date: Oct. 19, 2026

- This report is for the exclusive use of Intertek's Client and is provided pursuant to the agreement between Intertek and its Client. Intertek's responsibility and liability are limited to the terms and conditions of the agreement. Intertek assumes no liability to any party, other than to the Client in accordance with the agreement, for any loss, expense or damage occasioned by the use of this report. Only the Client is authorized to copy or distribute this report. Any use of the Intertek name or one of its marks for the sale or advertisement of the tested material, product or service must first be approved in writing by Intertek. The observations and test results referenced from this report are relevant only to the sample tested. This report by itself does not imply that the material, product, or service is or has ever been under an Intertek certification program.
- The test report only allows to be revised only within the report defined retention period unless further standard or the requirement was noticed

1. VERSION

Report No.	Version No.	Description	Issued Date
260824006SZN-005	*01*	*Original*	*Oct. 19, 2026*

2. CONTENTS

1. VERSION 2
2. CONTENTS 3
3. SAR RESULTS SUMMARY 4
4. GENERAL INFORMATION 5
5. TEST FACILITY 6
6. GUIDANCE STANDARD 7
7. EXPOSURE POSITIONS CONSIDERATION 8
8. RF EXPOSURE 9
9. SPECIFIC ABSORPTION RATE (SAR) 10
10. SAR MEASUREMENTS SYSTEM CONFIGURATION 11
11. MEASUREMENT PROCEDURES 25
12. MEASUREMENT PROCEDURES 31
13. TEST RESULTS 34
14. MEASUREMENT UNCERTAINTY 39
15. TEST EQUIPMENT LIST 41
ANNEX A: TEST LAYOUT AND SETUP 42
ANNEX B: SYSTEM CHECK RESULTS 42
ANNEX C: MAXIMUM GRAPH RESULTS 42
ANNEX D: SYSTEM VALIDATION 42
ANNEX E: EUT PHOTO 42
ANNEX F: PROBE CALIBRATION CERTIFICATE 42
ANNEX G: DIPOLE CALIBRATION CERTIFICATE 42
ANNEX H: DAE CALIBRATION CERTIFICATE 42

3. SAR RESULTS SUMMARY

The maximum results of Specific Absorption Rate (SAR) found during test as below:
<Highest Reported standalone SAR Summary>

Exposure Position	Frequency Band	Reported 1-g SAR (W/kg)	Equipment Class	Highest Reported 1-g SAR (W/kg)
Body (0mm Gap)	WLAN 2.4GHz	1.324	DTS	1.324
	WLAN 5.2 GHz	0.351	NII	0.454
	WLAN 5.3 GHz	0.444		
	WLAN 5.6 GHz	0.322		
	WLAN 5.8 GHz	0.454		

Note:

1. This device is compliance with Specific Absorption Rate (SAR) for general population/uncontrolled exposure limits (1.6 W/kg) specified in FCC 47 CFR part 2 (2.1093) and ANSI/IEEE Std. C95.1-1992 and had been tested in accordance with the measurement methods and procedures specified in IEEE Std 1528:2013.

4. GENERAL INFORMATION

4.1 Client Information

Applicant:	Anker Innovations Limited
Address of Applicant:	Unit 56, 8th Floor, Tower 2, Admiralty Centre,18 Harcourt Road, Hong Kong
Manufacturer:	Anker Innovations Limited
Address of Manufacturer:	Unit 56, 8th Floor, Tower 2, Admiralty Centre,18 Harcourt Road, Hong Kong

4.2 General Description of EUT

Product Name:	Wireless data terminal			
Model No.:	E6801HQ1			
Device Type:	Portable			
Exposure Category:	Population / Uncontrolled			
Operation Frequency:	Wi-Fi:	2412MHz-2462MHz	5180MHz-5240MHz	
		5260MHz-5320MHz	5500MHz-5700MHz	
		5745MHz-5825MHz		
	Bluetooth:	2402MHz-2480MHz		
Modulation technology:	Wi-Fi:	☒802.11b(DSSS)	☒802.11a/g/n/ac (OFDM)	
	Bluetooth:	☒BR(GFSK)	☐EDR(π/4-DQPSK, 8DPSK)	☒LE(GFSK)
Antenna Type:	PIFA antenna			

4.3 Disclaimer

Disclaimer:
For the information or data provided by the client in this report, the relevant results or conclusions of this report are only made for these data or information. The testing laboratory is not responsible for the authenticity and accuracy of these data or information.

5. TEST FACILITY

Site Description	
EMC Lab.	The Laboratory has been assessed and proved to be in compliance with CNAS/CL01: 2006(identical to ISO/IEC17025: 2005) The Certificate Registration Number is L0327
	Accredited by FCC FCC Designation No.: CN1188 FCC Registration No.: 435976
Name of Firm	Intertek Testing Services Shenzhen Ltd. Longhua Branch
Site Location	101, 201, Building B, No. 308 Wuhe Avenue, Zhangkengjing Community, GuanHu Subdistrict, LongHua District, ShenZhen, P.R. China

6. GUIDANCE STANDARD

The Specific Absorption Rate (SAR) testing specification, method, and procedure for this device is in accordance with the following standards:

☒FCC 47 CFR §2.1093 Radiofrequency Radiation Exposure Evaluation: Portable Devices

☒ANSI/IEEE Std. C95.1-1992 IEEE Standard for Safety Levels with Respect to Human Exposure to Radio Frequency Electromagnetic Fields, 3 kHz to 300 GHz

☒IEEE Std 1528™-2013 IEEE Recommended Practice for Determining the Peak Spatial-Average Specific Absorption Rate (SAR) in the Human Head from Wireless Communications Devices: Measurement Techniques

☒KDB 248227 D01 802.11 Wi-Fi SAR v02r02

☒KDB 447498 D01 General RF Exposure Guidance v06

☒KDB 648474 D04 Handset SAR v01r03

☒KDB 865664 D01 SAR measurement 100 MHz to 6 GHz v01r04

☒KDB 865664 D02 RF Exposure Reporting v01r02

☒KDB 616217 D04 SAR for laptop and tablets v01r02

☒KDB 941225 D06 Hot Spot SAR v02r01

7. EXPOSURE POSITIONS CONSIDERATION

EUT Antenna Locations

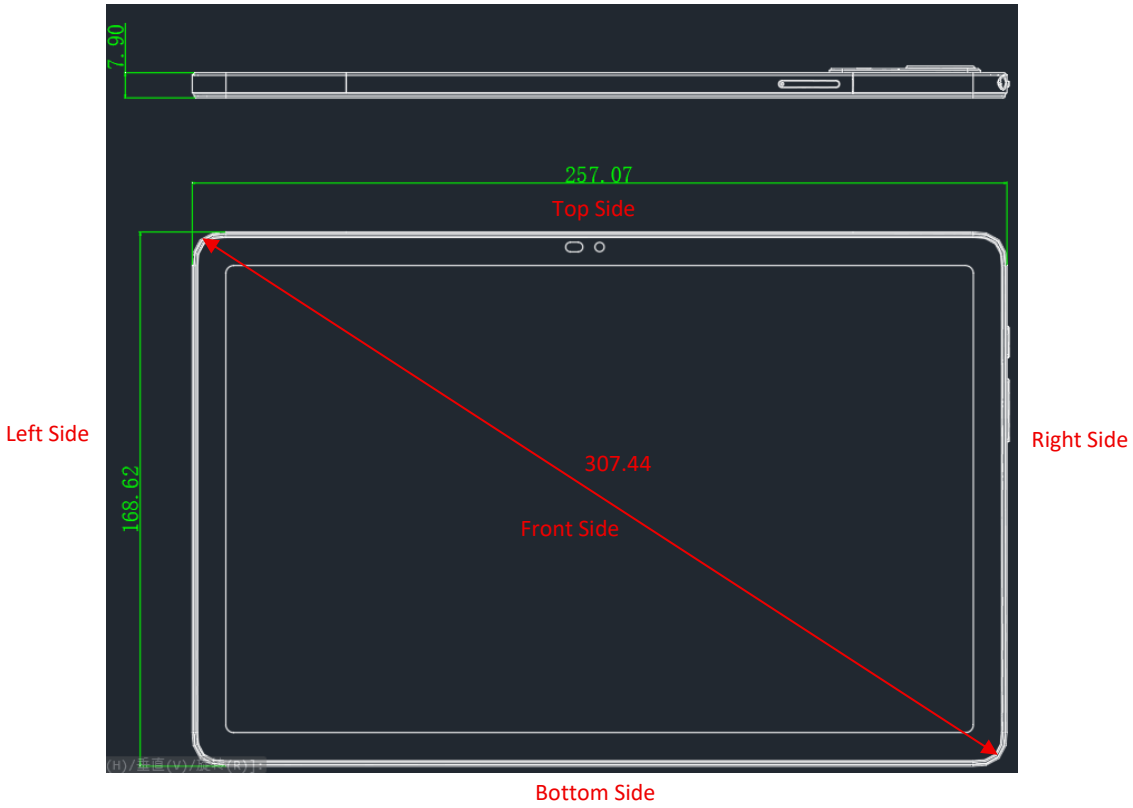

Test position consideration:

Distance of EUT antenna-to-edge/surface(mm), Test distance:0mm						
Antennas	**Back Side**	**Front Side**	**Top Side**	**Bottom Side**	**Right Side**	**Left Side**
BT&WIFI ANT	<25mm	<25mm	<25mm	≥25mm	≥25mm	≥25mm
SAR Test Requirement (Antenna-to-edge/surface distance ≤25mm)						
Antennas	**Back Side**	**Front Side**	**Top Side**	**Bottom Side**	**Right Side**	**Left Side**
BT&WIFI ANT	Yes	No (See Note)	Yes	No	No	No

Note:

1. Per KDB 616217 D04, when the overall diagonal dimension of the keyboard and/or display section of a laptop or tablet is > 20 cm, the test distance is 0mm. SAR must be measured for all sides and surfaces with a transmitting antenna located within 25mm from that surface or edge. Exposures from antennas through the front (top) surface of the display section of a full-size tablet, away from the edges, are generally limited to the user's hands. Exposures to hands for typical consumer transmitters used in tablets are not expected to exceed the extremity SAR limit; therefore, SAR evaluation for the front surface of tablet display screens are generally not necessary.

8. RF EXPOSURE

8.1 Uncontrolled Environment

Uncontrolled Environments are defined as locations where there is the exposure of individuals who have no knowledge or control of their exposure. The general population/uncontrolled exposure limits are applicable to situations in which the general public may be exposed or in which persons who are exposed as a consequence of their employment may not be made fully aware of the potential for exposure or cannot exercise control over their exposure. Members of the general public would come under this category when exposure is not employment-related; for example, in the case of a wireless transmitter that exposes persons in its vicinity.

8.2 Controlled Environment

Controlled Environments are defined as locations where there is exposure that may be incurred by persons who are aware of the potential for exposure, (i.e. as a result of employment or occupation). In general, occupational/controlled exposure limits are applicable to situations in which persons are exposed as a consequence of their employment, who have been made fully aware of the potential for exposure and can exercise control over their exposure. This exposure category is also applicable when the exposure is of a transient nature due to incidental passage through a location where the exposure levels may be higher than the general population/uncontrolled limits, but the exposed person is fully aware of the potential for exposure and can exercise control over his or her exposure by leaving the area or by some other appropriate means.

8.3 RF Exposure Limits

SAR Human Exposure Specified in ANSI/IEEE C95.1-1992 and Health Canada Safety Code 6

HUMAN EXPOSURE LIMITS		
	UNCONTROLLED ENVIRONMENT *General Population* (W/kg) or (mW/g)	CONTROLLED ENVIRONMENT *Occupational* (W/kg) or (mW/g)
SPATIAL PEAK SAR Brain	1.6	8.0
SPATIAL AVERAGE SAR Whole Body	0.08	0.4
SPATIAL PEAK SAR Hands, Feet, Ankles, Wrists	4.0	20

Note:

1. The Spatial Peak value of the SAR averaged over any 1 gram of tissue (defined as a tissue volume in the shape of a cube) and over the appropriate averaging time.
2. The Spatial Average value of the SAR averaged over the whole body.
3. The Spatial Peak value of the SAR averaged over any 10 grams of tissue (defined as a tissue volume in the shape of a cube) and over the appropriate averaging time.

9. SPECIFIC ABSORPTION RATE (SAR)

9.1 INTRODUCTION

SAR is related to the rate at which energy is absorbed per unit mass in an object exposed to a radio field. The SAR distribution in a biological body is complicated and is usually carried out by experimental techniques or numerical modeling. The standard recommends limits for two tiers of groups, occupational/controlled and general population/uncontrolled, based on a person's awareness and ability to exercise control over his or her exposure. In general, occupational/controlled exposure limits are higher than the limits for general population/uncontrolled.

9.2 SAR DEFINITION

The SAR definition is the time derivative (rate) of the incremental energy (dW) absorbed by (dissipated in) an incremental mass (dm) contained in a volume element (dv) of a given density (ρ). The equation description is as below:

$$SAR = \frac{d}{dt}\left(\frac{dW}{dm}\right) = \frac{d}{dt}\left(\frac{dW}{\rho dv}\right)$$

SAR is expressed in units of Watts per kilogram (W/kg)
SAR measurement can be either related to the temperature elevation in tissue by

$$SAR = c\left(\frac{\delta T}{\delta t}\right)$$

Where: C is the specific head capacity, δT is the temperature rise and δt is the exposure duration, or related to the electrical field in the tissue by

$$SAR = \frac{\sigma |E|^2}{\rho}$$

Where: σ is the conductivity of the tissue ρ is the mass density of tissue and E is the RMS electrical field strength.

However for evaluating SAR of low power transmitter, electrical field measurement is typically applied.

10. SAR MEASUREMENTS SYSTEM CONFIGURATION

10.1 SAR MEASUREMENT SYSTEM

The DASY5 system for performing compliance tests consists of the following items:

- A standard high precision 6-axis robot (Stäubli TX=RX family) with controller, teach pendant and software. An arm extension for accommodating the data acquisition electronics (DAE).
- An isotropic field probe optimized and calibrated for the targeted measurement.
- A data acquisition electronics (DAE) which performs the signal amplification, signal multiplexing, AD-conversion, offset measurements, mechanical surface detection, collision detection, etc. The unit is battery powered with standard or rechargeable batteries. The signal is optically transmitted to the EOC.
- The Electro-optical converter (EOC) performs the conversion from optical to electrical signals for the digital communication to the DAE. To use optical surface detection, a special version of the EOC is required. The EOC signal is transmitted to the measurement server.
- The function of the measurement server is to perform the time critical tasks such as signal filtering, control of the robot operation and fast movement interrupts.
- The Light Beam used is for probe alignment. This improves the (absolute) accuracy of the probe positioning.
- A computer running Win 7 profesional operating system and the DASY5 software.
- Remote control and teach pendant as well as additional circuitry for robot safety such as warning lamps, etc.
- The phantom, the device holder and other accessories according to the targeted measurement.

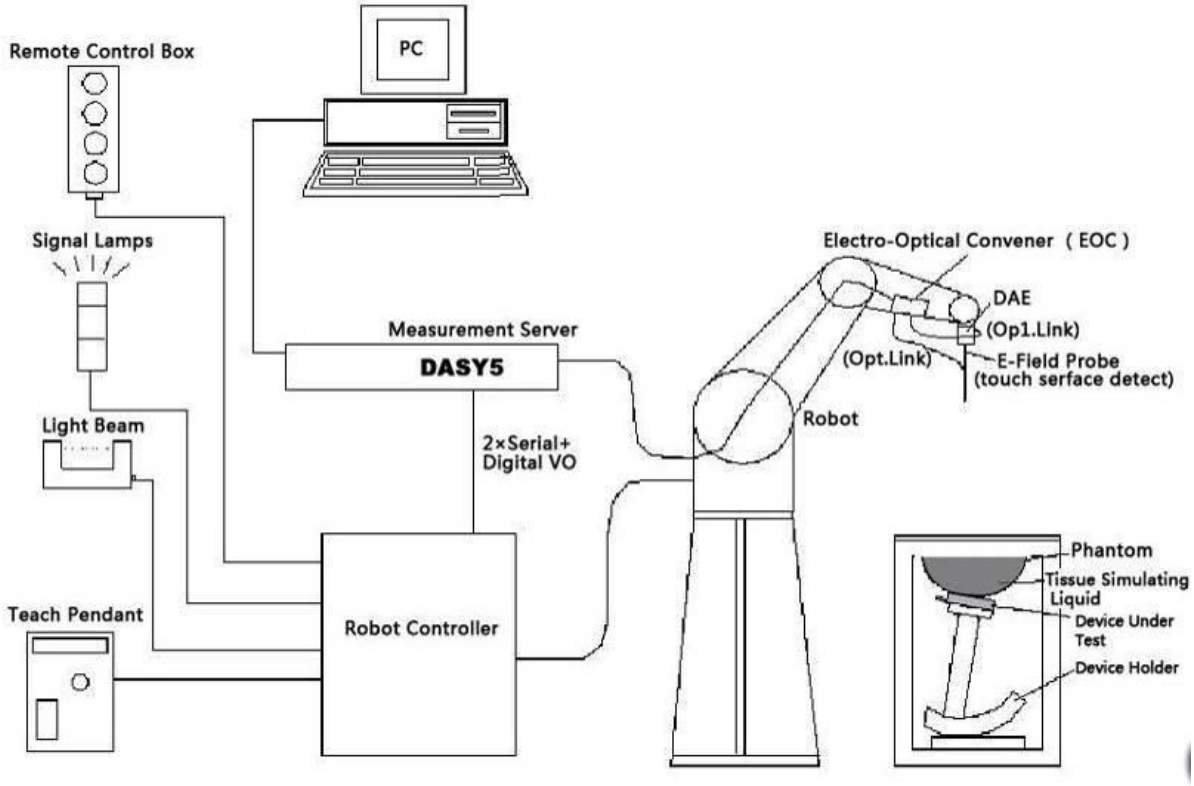

Picture 1: SAR Lab Test Measurement Set-up

10.2 DASY5 E-FIELD PROBE SYSTEM

The SAR measurements were conducted with the dosimetric probe designed in the classical triangular configuration and optimized for dosimetric evaluation. The probe is constructed using the thick film technique; with printed resistive lines on ceramic substrates. The probe is equipped with an optical multifiber line ending at the front of the probe tip. It is connected to the EOC box on the robot arm and provides an automatic detection of the phantom surface. Half of the fibers are connected to a pulsed infrared transmitter, the other half to a synchronized receiver. As the probe approaches the surface, the reflection from the surface produces a coupling from the transmitting to the receiving fibers. This reflection increases first during the approach, reaches maximum and then decreases. If the probe is flatly touching the surface, the coupling is zero. The distance of the coupling maximum to the surface is independent of the surface reflectivity and largely independent of the surface to probe angle. The DASY5 software reads the reflection turning a software approach and looks for the maximum using 2nd ord curve fitting. The approach is stopped at reaching the maximum.

Probe Specifications:

Model:	EX3DV4
Calibration:	ISO/IEC 17025 calibration service available
Probe Length:	337 mm
Probe Tip Length:	9 mm
Body Diameter:	10 mm
Tip Diameter:	2.5 mm
Application:	High Precision dosimetric measurements in any exposure scenario (e.g., very strong Picture 2 E-field Probe gradient fields).

Picture 2: E-field Probe

10.3 E-FIELD PROBE CALIBRATION

Each E-Probe/Probe Amplifier combination has unique calibration parameters. A TEM cell calibration procedure is conducted to determine the proper amplifier settings to enter in the probe parameters. The amplifier settings are determined for a given frequency by subjecting the probe to a known E-field density (1 mW/cm^2) using an RF Signal generator, TEM cell, and RF Power Meter.

The free space E-field from amplified probe outputs is determined in a test chamber. This calibration can be performed in a TEM cell if the frequency is below 1 GHz and inn a waveguide or other methodologies above 1 GHz for free space. For the free space calibration, the probe is placed in the volumetric center of the cavity and at the proper orientation with the field. The probe is then rotated 360 degrees until the three channels show the maximum reading. The power density readings equate to 1 mw/ cm^2.

E-field temperature correlation calibration is performed in a flat phantom filled with the appropriate simulated brain tissue. The E-field in the medium correlates with the temperature rise in the dielectric medium. For temperature correlation calibration a RF transparent thermistor-based temperature probe is used in conjunction with the E-field probe.

$$SAR = C\frac{\Delta T}{\Delta t}$$

Where:
Δt = Exposure time (30 seconds),
C = Heat capacity of tissue (brain or muscle),
ΔT = Temperature increase due to RF exposure.

$$SAR = \frac{|E|^2 \cdot \sigma}{\rho}$$

Where:
σ = Simulated tissue conductivity,
ρ = Tissue density (kg/m^3).

10.4 OTHER TEST EQUIPMENT

10.4.1 Data Acquisition Electronics (DAE)

The data acquisition electronics consist of a highly sensitive electrometer-grade preamplifier with auto-zeroing, a channel and gain-switching multiplexer, a fast 16 bit AD-converter and a command decoder with a control logic unit. Transmission to the measurement server is accomplished through an optical downlink for data and status information, as well as an optical uplink for commands and the clock.

The mechanical probe mounting device includes two different sensor systems for frontal and sideways probe contacts. They are used for mechanical surface detection and probe collision detection.

The input impedance of the DAE is 200 MOhm; the inputs are symmetrical and floating. Common mode rejection is above 80 dB.

Picture 3: DAE

10.4.2 Robot

The SPEAG DASY system uses the high precision robots (DASY5: TX90XL) type from Stäubli SA (France). For the 6-axis controller system, the robot controller version from Stäubli is used. The Stäubli robot series have many features that are important for our application:

- High precision (repeatability 0.02mm)
- High reliability (industrial design)
- Low maintenance costs (virtually maintenance free due to direct drive gears; no belt drives)
- Jerk-free straight movements (brushless synchron motors; no stepper motors)
- Low ELF interference (motor control fields shielded via the closed metallic construction shields)

Picture 4: DASY 5

10.4.3 Measurement Server

The Measurement server is based on a PC/104 CPU broad with CPU (DASY5: 400 MHz, Intel Celeron), chip disk (DASY5: 128MB), RAM (DASY5: 128MB). The necessary circuits for communication with the DAE electronic box, as well as the 16 bit AD converter system for optical detection and digital I/O interface are contained on the DASY I/O broad, which is directly connected to the PC/104 bus of the CPU broad.

Picture 5 Server for DASY 5

The measurement server performs all real-time data evaluation of field measurements and surface detection, controls robot movements and handles safety operation. The PC operating system cannot interfere with these time critical processes. All connections are supervised by a watchdog, and disconnection of any of the cables to the measurement server will automatically disarm the robot and disable all program-controlled robot movements. Furthermore, the measurement server is equipped with an expansion port which is reserved for future applications. Please note that this expansion port does not have a standardized pinout, and therefore only devices provided by SPEAG can be connected. Devices from any other supplier could seriously damage the measurement server.

10.4.4 Device Holder for Phantom

The SAR in the phantom is approximately inversely proportional to the square of the distance between the source and the liquid surface. For a source at 5mm distance, a positioning uncertainty of ±0.5mm would produce a SAR uncertainty of ±20%. Accurate device positioning is therefore crucial for accurate and repeatable measurements. The positions in which the devices must be measured are defined by the standards.

The DASY device holder is designed to cope with the different positions given in the standard. It has two scales for device rotation (with respect to the body axis) and device inclination (with respect to the line between the ear reference points). The rotation centers for both scales are the ear reference point (ERP). Thus the device needs no repositioning when changing the angles.

The DASY device holder is constructed of low-loss POM material having the following dielectric parameters: relative permittivity ε =3 and loss tangent δ =0.02. The amount of dielectric material has been reduced in the closest vicinity of the device, since measurements have suggested that the influence of the clamp on the test results could thus be lowered.

<Laptop Extension Kit>

The extension is lightweight and made of POM, acrylic glass and foam. It fits easily on the upper part of the Mounting Device in place of the phone positioner. The extension is fully compatible with the Twin-SAM and ELI phantoms.

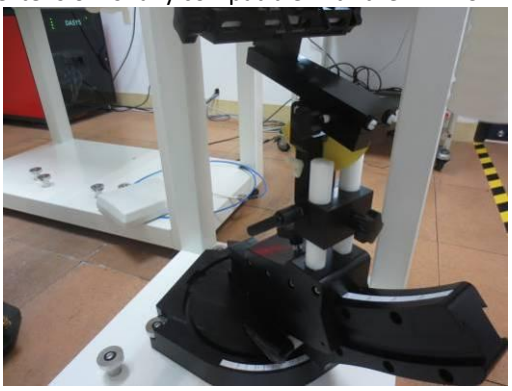

Picture 6: Device Holder

10.4.5 Phantom

The SAM Twin Phantom V4.0 is constructed of a fiberglass shell integrated in a table. The shape of the shell is based on data from an anatomical study designed to Represent the 90th percentile of the population. The phantom enables the dissymmetric evaluation of SAR for both left and right handed handset usage, as well as body-worn usage using the flat phantom region. Reference markings on the Phantom allow the complete setup of all predefined phantom positions and measurement grids by manually teaching three points in the robot. The shell phantom has a 2mm shell thickness (except the ear region where shell thickness increases to 6 mm).

Shell Thickness: 2 ± 0. 2 mm
Filling Volume: Approx. 25 liters
Dimensions: 810 x l000 x 500 mm (H x L x W)
Available: Special

Picture 7: SAM Twin Phantom

Phantom for compliance testing of handheld and body-mounted wireless devices in the frequency range of 30 MHz to 6 GHz. ELI is fully compatible with the IEC 62209-2 standard and all known tissue simulating liquids. ELI has been optimized regarding its performance and can be integrated into our standard phantom tables. A cover prevents evaporation of the liquid. Reference markings on the phantom allow installation of the complete setup, including all predefined phantom positions and measurement grids, by teaching three points. The phantom is compatible with all SPEAG dosimetric probes and dipoles.

Shell Thickness: 2±0.2 mm
Filling Volume: Approx. 30 liters
Dimensions: 190×600×400 mm (H x L x W)

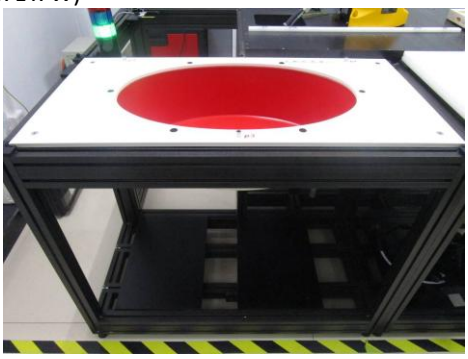

Picture 8.ELI Phantom

10.5 SCANNING PROCEDURE

The DASY5 installation includes predefined files with recommended procedures for measurements and validation. They are read-only document files and destined as fully defined but unmeasured masks. All test positions (head or body-worn) are tested with the same configuration of test steps differing only in the grid definition for the different test positions.

The “reference” and “drift” measurements are located at the beginning and end of the batch process. They measure the field drift at one single point in the liquid over the complete procedure. The indicated drift is mainly the variation of the DUT’s output power and should vary max. ± 5 %.

The “surface check” measurement tests the optical surface detection system of the DASY5 system by repeatedly detecting the surface with the optical and mechanical surface detector and comparing the results. The output gives the detecting heights of both systems, the difference between the two systems and the standard deviation of the detection repeatability. Air bubbles or refraction in the liquid due to separation of the sugar-water mixture gives poor repeatability (above ± 0.1mm). To prevent wrong results tests are only executed when the liquid is free of air bubbles. The difference between the optical surface detection and the actual surface depends on the probe and is specified with each probe. (It does not depend on the surface reflectivity or the probe angle to the surface within ± 30°.)

Area Scan

The Area Scan is used as a fast scan in two dimensions to find the area of high field values before running a detailed measurement around the hot spot. Before starting the area scan a grid spacing is set according to FCC KDB Publication 865664. During scan the distance of the probe to the phantom remains unchanged. After finishing area scan, the field maxima within a range of 2 dB will be ascertained.

Zoom Scan

After the maximum interpolated values were calculated between the points in the cube, the SAR was averaged over the spatial volume (1g or 10g) using a 3D-Spline interpolation algorithm. The 3D-spline is composed of three one-dimensional splines with the “Not a knot” condition (in x, y, and z directions). The volume was then integrated with the trapezoidal algorithm.

Spatial Peak Detection

The procedure for spatial peak SAR evaluation has been implemented and can determine values of masses of 1g and 10g, as well as for user-specific masses. The DASY5 system allows evaluations that combine measured data and robot positions, such as:

- maximum search
- extrapolation
- boundary correction
- peak search for averaged SAR

During a maximum search, global and local maxima searches are automatically performed in 2-D after each Area Scan measurement with at least 6 measurement points. It is based on the evaluation of the local SAR gradient calculated by the Quadratic Shepard’s method. The algorithm will find the global maximum and all local maxima within -2 dB of the global maxima for all SAR distributions.

Extrapolation routines are used to obtain SAR values between the lowest measurement points and the inner phantom surface. The extrapolation distance is determined by the surface detection distance and the probe sensor offset. Several measurements at different distances are necessary for the extrapolation. Extrapolation routines require at least 10 measurement points in 3-D space.

They are used in the Zoom Scan to obtain SAR values between the lowest measurement points and the inner phantom surface. The routine uses the modified Quadratic Shepard's method for extrapolation.

A Z-axis scan measures the total SAR value at the x-and y-position of the maximum SAR value found during the cube scan. The probe is moved away in z-direction from the bottom of the SAM phantom in 5mm steps.

Table 1: Area and Zoom Scan Resolutions per FCC KDB Publication 865664 D01

Frequency	Maximum Area Scan Resolution (mm) (Δx area, Δy area)	Maximum Zoom Scan Resolution (mm) (Δx zoom, Δy zoom)	Maximum Zoom Scan Spatial Resolution (mm) Δz zoom(n)	Minimum Zoom Scan Volume (mm) (x, y, z)
≤2 GHz	≤15	≤8	≤5	≥30
2-3 GHz	≤12	≤5	≤5	≥30
3-4 GHz	≤12	≤5	≤4	≥28
4-5 GHz	≤10	≤4	≤3	≥25
5-6 GHz	≤10	≤4	≤2	≥22

10.6 DATA STORAGE AND EVALUATION

10.6.1 Data Storage

The DASY5 software stores the acquired data from the data acquisition electronics as raw data (in microvolt readings from the probe sensors), together with all necessary software parameters for the data evaluation (probe calibration data, liquid parameters and device frequency and modulation data) in measurement files with the extension ".DAE4". The software evaluates the desired unit and format for output each time the data is visualized or exported. This allows verification of the complete software setup even after the measurement and allows correction of incorrect parameter settings. For example, if a measurement has been performed with a wrong crest factor parameter in the device set up, the parameter can be corrected afterwards and the data can be re-evaluated.

The measured data can be visualized or exported in different units or formats, depending on the selected probe type ([V/m], [A/m], [°C], [mW/g], [mW/cm²], [dBrel], etc.). Some of these units are not available in certain situations or show meaningless results, e.g., a SAR output in a loss less media will always be zero. Raw data can also be exported to perform the evaluation with other software packages.

10.6.2 Data Evaluation by SEMCAD

The SEMCAD software automatically executes the following procedures to calculate the field units from the microvolt readings at the probe connector. The parameters used in the evaluation are stored in the configuration modules of the software:

Probe parameters:
- Sensitivity $Norm_i$, a_{i0}, a_{i1}, a_{i2}
- Conversion factor $ConvF_i$
- Diode compression point Dcp_i

Device parameters:
- Frequency f
- Crest factor cf

Media parameters:
- Conductivity
- Density

These parameters must be set correctly in the software. They can be found in the component documents or they can be imported into the software from the configuration files issued for the DASY5 components. In the direct measuring mode of the multimeter option, the parameters of the actual system setup are used. In the scan visualization and export modes, the parameters stored in the corresponding document files are used.

The first step of the evaluation is a linearization of the filtered input signal to account for the compression characteristics of the detector diode. The compensation depends on the input signal, the diode type and the DC-transmission factor from the diode to the evaluation electronics.

If the exciting field is pulsed, the crest factor of the signal must be known to correctly compensate for peak power. The formula for each channel can be given as:

$$\mathbf{V_i = U_i + U_i^2 \cdot c\,f / dcp_i}$$

With $\mathbf{V_i}$ = compensated signal of channel i (i = x, y, z)
$\mathbf{U_i}$ = input signal of channel i (i = x, y, z)
cf = crest factor of exciting field (DASY parameter)
$\mathbf{dcp_i}$ = diode compression point (DASY parameter)

From the compensated input signals the primary field data for each channel can be evaluated:
E-field probes: $\mathbf{E_i = (V_i / Norm_i \cdot ConvF)^{1/2}}$
H-field probes: $\mathbf{H_i = (V_i)^{1/2} \cdot (a_{i0} + a_{i1} f + a_{i2} f^2) / f}$

With $\mathbf{V_i}$ = compensated signal of channel i (i = x, y, z)
$\mathbf{Norm_i}$ = sensor sensitivity of channel i (i = x, y, z)
[mV/(V/m)2] for E-field Probes
ConvF = sensitivity enhancement in solution
$\mathbf{a_{ij}}$ **=** sensor sensitivity factors for H-field probes
f = carrier frequency [GHz]
$\mathbf{E_i}$ = electric field strength of channel i in V/m
$\mathbf{H_i}$ = magnetic field strength of channel i in A/m

The RSS value of the field components gives the total field strength (Hermitian magnitude):
$\mathbf{E_{tot} = (E_x^2 + E_Y^2 + E_z^2)^{1/2}}$

The primary field data are used to calculate the derived field units.
$\mathbf{SAR = (E_{tot})\ 2 \cdot \sigma / (\rho \cdot 1000)}$
with **SAR** = local specific absorption rate in mW/g
$\mathbf{E_{tot}}$ = total field strength in V/m
σ = conductivity in [mho/m] or [Siemens/m]
ρ = equivalent tissue density in g/cm^3

Note that the density is normally set to 1 (or 1.06), to account for actual brain density rather than the density of the simulation liquid. The power flow density is calculated assuming the excitation field to be a free space field.
$\mathbf{P_{pwe} = E_{tot}^2 / 3770}$ **or** $\mathbf{P_{pwe} = H_{tot}^2 \cdot 37.7}$
with $\mathbf{P_{pwe}}$ = equivalent power density of a plane wave in mW/cm^2
$\mathbf{E_{tot}}$ = total electric field strength in V/m ; $\mathbf{H_{tot}}$ = total magnetic field strength in A/m

10.7 TISSUE-EQUIVALENT LIQUID

10.7.1 Tissue-equivalent Liquid Ingredients

The liquid is consisted of water, salt and Glycol etc. The liquid has previously been proven to be suited for worst-case. The Table 2 & 3 shows the detail solution. It's satisfying the latest tissue dielectric parameters requirements proposed by the KDB 865664 D01.

Table 2: The following recipe(s) were used for Head (H) and Body (B) Tissue-equivalent liquid(s)

Tissue Type	Bactericide	DGBE	HEC	NaCl	Sucrose	Triton X-100	Water	Diethylene Glycol Mono-hexylether
H750	0.2	-	0.2	1.4	57.0	-	41.1	-
H835	0.1	-	1.0	1.4	57.0	-	40.5	-
H900	0.1	-	1.0	1.5	56.5	-	40.9	-
H1450	-	45.5	-	0.7	-	-	53.8	-
H1640	-	45.8	-	0.5	-	-	53.7	-
H1750	-	44.5	-	0.3	-	-	55.2	-
H1800	-	44.9	-	0.2	-	-	54.9	-
H1900	-	44.9	-	0.2	-	-	54.9	-
H2000	-	50	-	-	-	-	50	-
H2300	-	44.9	-	0.1	-	-	55.0	-
H2450	-	45.0	-	0.1	-	-	54.9	-
H2600	-	45.1	-	0.1	-	-	54.8	-
H3500	-	8.0	-	0.2	-	20.0	71.8	-
H5G	-	-	-	-	-	17.2	65.52	17.3

Table 3: Targets of Tissue Simulating Liquid

Frequency (MHz)	Relative permittivity ε_r	Conductivity (σ) S/m
450	43.5	0.87
750	41.9	0.89
835	41.5	0.90
900	41.5	0.97
1750	40.1	1.37
1800	40.0	1.40
1900	40.0	1.40
2000	40.0	1.40
2300	39.5	1.67
2450	39.2	1.80
2600	39.0	1.96
5200	36.0	4.66
5300	35.9	4.76
5500	35.6	4.96
5600	35.5	5.07
5800	35.3	5.27
6000	35.1	5.48

10.7.2 Tissue-equivalent Liquid Properties

Table 4: Dielectric Performance of Head Tissue Simulating Liquid

Tissue Verification								
Tissue Type	Frequency (MHz)	Conductivity (σ)	Permittivity (εr)	Targeted Conductivity (σ)	Targeted Permittivity (εr)	Tolerance Limit (±5%)		Date
						Deviation Conductivity (σ)	Deviation Permittivity (εr)	
Head	2450	1.884	38.28	1.80	39.2	4.67	-2.35	2026/09/07
Head	5200	4.695	36.339	4.66	36.0	0.75	0.94	2026/09/08
Head	5300	4.642	34.734	4.76	35.9	-2.48	-3.25	2026/09/09
Head	5600	4.922	34.274	5.07	35.5	-2.92	-3.45	2026/09/09
Head	5800	5.311	35.458	5.27	35.3	0.78	0.45	2026/09/09

Note:

1. The dielectric properties have been measured using the contact probe method at 22±2°C.
2. Deviation Calculation: The values under "Deviation Conductivity (σ)" and "Deviation Permittivity (εr)" represent the relative percentage difference between the measured and targeted values, calculated as:
   Deviation σ (%) = [(Measured_σ - Targeted_σ) / Targeted_σ] × 100%
   Deviation εr (%) = [(Measured_εr - Targeted_εr) / Targeted_εr] × 100%
3. Tolerance Criteria: The "Tolerance Limit (±5%)" requires that the absolute value of both calculated deviations must be ≤ 5% for the tissue simulating liquid to be considered valid.

10.8 SYSTEM CHECK

10.8.1 Description of System Check

The manufacturer calibrates the probes annually. Dielectric parameters of the tissue simulants were measured every day using the dielectric probe kit and the network analyzer. A system check measurement was made following the determination of the dielectric parameters of the simulant, using the dipole validation kit. A power level of 250 mW was supplied to the dipole antenna, which was placed under the flat section of the twin SAM phantom. The system check results (dielectric parameters and SAR values) are given in the table 5. System check results have to be equal or near the values determined during dipole calibration with the relevant liquids and test system (±10 %). System check is performed regularly on all frequency bands where tests are performed with the DASY5 system.

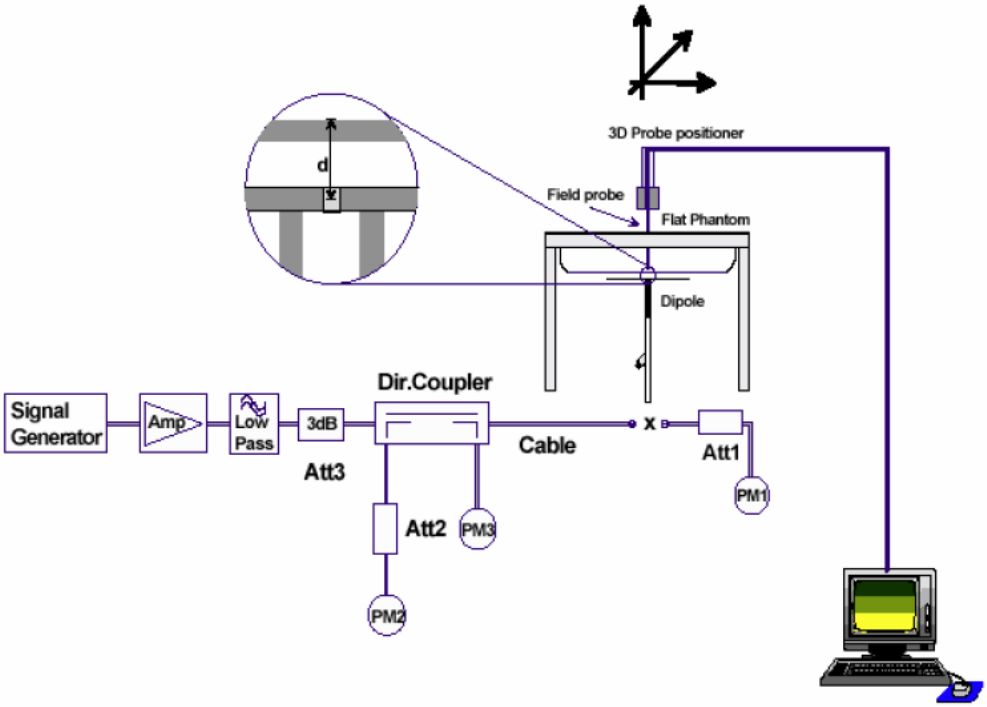

Picture 10. System Check Set-up

Justification for Extended SAR Dipole Calibrations
Usage of SAR dipoles calibrated less than 3 years ago but more than 1 year ago were confirmed in maintaining return loss (< - 20 dB, within 20% of prior calibration) and impedance (within 5 ohm from prior calibration) requirements per extended calibrations in KDB 865664 D01.

10.8.2 System Check Results

Table 5: System Check for Simulating Liquid

Tissue Type	Frequency (MHz)	Measured SAR 1g (W/kg)	Normalized SAR 1g (W/kg)	Targeted SAR 1g (W/kg)	Tolerance Limit (±10%) Deviation SAR 1g (%)	Date
Head	2450	13.08	52.32	52.5	-0.34	2026/09/07
Head	5200	7.72	77.20	77.6	-0.52	2026/09/08
Head	5300	7.78	77.80	78.0	-0.26	2026/09/09
Head	5600	8.11	81.10	81.2	-0.12	2026/09/09
Head	5800	7.84	78.40	78.7	-0.38	2026/09/09

Note:

1. Plots of the system checking scans are given in Appendix B.
2. The relative deviation of the Normalized SAR 1g from the Targeted SAR 1g must be within a ±10% tolerance limit. All results in this table are within this limit, confirming the validity of the measurement system.
3. Below 5GHz system check input power: 250mW, above 5GHz system check input power: 100mW

11. MEASUREMENT PROCEDURES

11.1 GENERAL DESCRIPTION OF TEST PROCEDURES

For WLAN SAR testing, WLAN engineering testing software installed on the DUT can provide continuous transmitting RF signal. This RF signal utilized in SAR measurement has almost 100% duty cycle and its crest factor is 1.

For the 802.11a/b/g/n/ac SAR tests, a communication link is set up with the test mode software for WIFI mode test. During the test, at the each test frequency channel, the EUT is operated at the RF continuous emission mode. Provided higher maximum output power is not specified for the other channels, channels 1, 6, 11, 36, 40, 48, 46, 42 are used to configure 22 MHz DSSS and 20/40/80MHz OFDM channels for SAR measurements; otherwise, the closest adjacent channel with the highest maximum output power specified for production units should be tested instead of channels 1, 6, 11,40, 48, 46 or 42. In addition, SAR test reduction with respect to reported SAR and transmission band width according to 4.3.3 of KDB Publication 447498 D01 may also be applied.

802.11a/b/g/n/ac operating modes are tested independently according to the service requirements in each frequency band. 802.11a/b/g/n/ac modes are tested on the maximum average output channel. SAR is measured for 2.4 GHz 802.11b DSSS using either a fixed test position or, when applicable, the initial test position procedure. SAR test reduction is determined according to the following:

a) When the reported SAR of the highest measured maximum output power channel for the exposure configuration is ≤ 0.8 W/kg, no further SAR testing is required for 802.11b DSSS in that exposure configuration.
b) When the reported SAR is > 0.8 W/kg, SAR is required for that exposure configuration using the next highest measured output power channel. When any reported SAR is > 1.2 W/kg, SAR is required for the third channel; i.e., all channels require testing.

When SAR measurement is required for 2.4 GHz 802.11g/n OFDM configurations, the measurement and test reduction procedures for OFDM are applied. SAR is not required for the following 2.4 GHz OFDM conditions.

a) When KDB Publication 447498 D01 SAR test exclusion applies to the OFDM configuration.
b) When the highest reported SAR for DSSS is adjusted by the ratio of OFDM to DSSS specified maximum output power and the adjusted SAR is ≤ 1.2 W/kg.

11.2 MEASUREMENT VARIABILITY

Per FCC KDB Publication 865664 D01, SAR measurement variability was assessed for each frequency band, which was determined by the SAR probe calibration point and tissue-equivalent medium used for the device measurements. When both head and body tissue-equivalent media were required for SAR measurements in a frequency band, the variability measurement procedures were applied to the tissue medium with the highest measured SAR, using the highest measured SAR configuration for that tissue-equivalent medium. These additional measurements were repeated after the completion of all measurements requiring the same head or body tissue-equivalent medium in a frequency band. The test device was returned to ambient conditions (normal room temperature) with the battery fully charged before it was re-mounted on the device holder for the repeated measurement(s) to minimize any unexpected variations in the repeated results.

SAR Measurement Variability was assessed using the following procedures for each frequency band:

1. Repeated measurement is not required when the original highest measured SAR is < 0.80 W/kg; steps 2) through 4) do not apply.
2. When the original highest measured SAR is ≥ 0.80 W/kg, repeat that measurement once.
3. Perform a second repeated measurement only if the ratio of largest to smallest SAR for the original and first repeated measurements is > 1.20 or when the original or repeated measurement is ≥ 1.45 W/kg (~ 10% from the 1-g SAR limit).
4. Perform a third repeated measurement only if the original, first or second repeated measurement is ≥ 1.5 W/kg and the ratio of largest to smallest SAR for the original, first and second repeated measurements is > 1.20.

11.3 Test Positions Requirements

11.3.1 Ear and handset reference point

Picture11 shows the front, back, and side views of the SAM phantom. The center-of-mouth reference point is labeled "M," the left ear reference point (ERP) is marked "LE," and the right ERP is marked "RE." Each ERP is 15 mm along the B-M (back-mouth) line behind the entrance-to-ear-canal (EEC) point, as shown in Picture12.The Reference Plane is defined as passing through the two ear reference points and point M. The line N-F (neck-front), also called the reference pivoting line, is normal to the Reference Plane and perpendicular to both a line passing through RE and LE and the B-M line (see Picture13). Both N-F and B-M lines should be marked on the exterior of the phantom shell to facilitate handset positioning. Posterior to the N-F line the ear shape is a flat surface with 6 mm thickness at each ERP, and forward of the N-F line the ear is truncated, as illustrated in Picture12. The ear truncation is introduced to preclude the ear lobe from interfering with handset tilt, which could lead to unstable positioning at the cheek.

Picture11: Front, back, and side views of SAM twin phantom

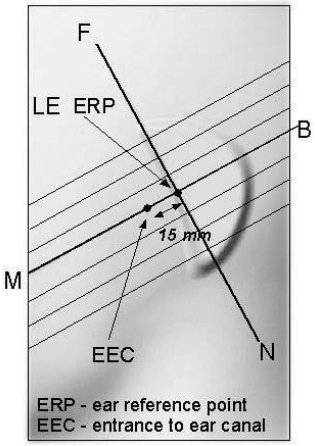

Picture12: Close-up side view of phantom showing the ear region.

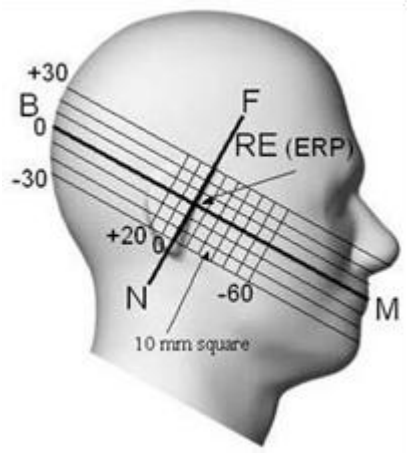

Picture13: Side view of the phantom showing relevant markings and seven cross-sectional plane locations

11.3.2 Definition of the cheek position

1. Ready the handset for talk operation, if necessary. For example, for handsets with a cover piece (flip cover), open the cover. If the handset can transmit with the cover closed, both configurations must be tested.
2. Define two imaginary lines on the handset—the vertical centerline and the horizontal line. The vertical centerline passes through two points on the Phantom Side of the handset—the midpoint of the width wt of the handset at the level of the acoustic output (point A in Picture 14 and Picture 15), and the midpoint of the width wb of the bottom of the handset (point B). The horizontal line is perpendicular to the vertical centerline and passes through the center of the acoustic output (see Picture 14). The two lines intersect at point A. Note that for many handsets, point A coincides with the center of the acoustic output; however, the acoustic output may be located elsewhere on the horizontal line. Also note that the vertical centerline is not necessarily parallel to the front face of the handset (see Picture 15), especially for clamshell handsets, handsets with flip covers, and other irregularly-shaped handsets.
3. Position the handset close to the surface of the phantom such that point A is on the (virtual) extension of the line passing through points RE and LE on the phantom (see Picture 16), such that the plane defined by the vertical centerline and the horizontal line of the handset is approximately parallel to the sagittal plane of the phantom.
4. Translate the handset towards the phantom along the line passing through RE and LE until handset point A touches the pinna at the ERP.
5. While maintaining the handset in this plane, rotate it around the LE-RE line until the vertical centerline is in the plane normal to the plane containing B-M and N-F lines, i.e., the Reference Plane.
6. Rotate the handset around the vertical centerline until the handset (horizontal line) is parallel to the N-F line.
7. While maintaining the vertical centerline in the Reference Plane, keeping point A on the line passing through RE and LE, and maintaining the handset contact with the pinna, rotate the handset about the N-F line until any point on the handset is in contact with a phantom point below the pinna on the cheek. See Picture 16. The actual rotation angles should be documented in the test report.

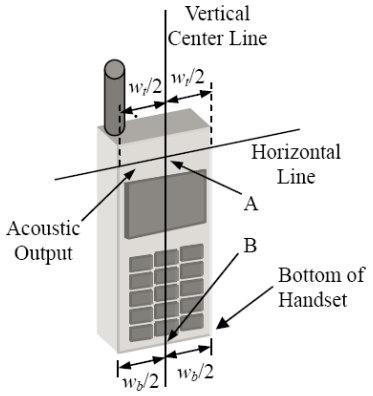

Picture14: Handset vertical and horizontal reference lines—"fixed case

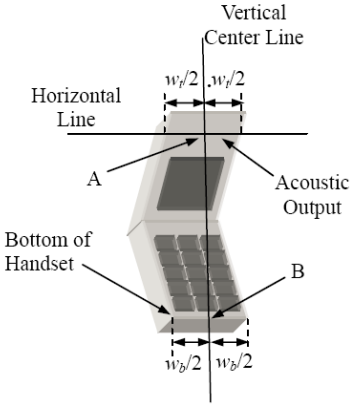

Picture15: Handset vertical and horizontal reference lines—"clam-shell case"

Picture16: cheek or touch position. The reference points for the right ear (RE), left ear (LE), and mouth (M), which establish the Reference Plane for handset positioning, are indicated.

11.3.3 Definition of the tilt position

1. Ready the handset for talk operation, if necessary. For example, for handsets with a cover piece (flip cover), open the cover. If the handset can transmit with the cover closed, both configurations must be tested.
2. While maintaining the orientation of the handset, move the handset away from the pinna along the line passing through RE and LE far enough to allow a rotation of the handset away from the cheek by 15°.
3. Rotate the handset around the horizontal line by 15°.
4. While maintaining the orientation of the handset, move the handset towards the phantom on the line passing through RE and LE until any part of the handset touches the ear. The tilt position is obtained when the contact point is on the pinna. See Picture 17. If contact occurs at any location other than the pinna, e.g., the antenna at the back of the phantom head, the angle of the handset should be reduced. In this case, the tilt position is obtained if any point on the handset is in contact with the pinna and a second point

Picture17: Tilt position. The reference points for the right ear (RE), left ear (LE), and mouth (M), which define the Reference Plane for handset positioning, are indicated.

11.3.4 Body Worn Accessory

Body-worn operating configurations are tested with the belt-clips and holsters attached to the device and positioned against a flat phantom in a normal use configuration (see Picture 18). Per KDB 648474 D04v01r02, body-worn accessory exposure is typically related to voice mode operations when handsets are carried in body-worn accessories. The body-worn accessory procedures in FCC KDB 447498 D01v05r02 should be used to test for body-worn accessory SAR compliance, without a headset connected to it. This enables the test results for such configuration to be compatible with that required for hotspot mode when the body-worn accessory test separation distance is greater than or equal to that required for hotspot mode, when applicable. When the reported SAR for body-worn accessory, measured without a headset connected to the handset is > 1.2 W/kg, the highest reported SAR configuration for that wireless mode and frequency band should be repeated for that body-worn accessory with a handset attached to the handset.

Accessories for body-worn operation configurations are divided into two categories: those that do not contain metallic components and those that do contain metallic components and those that do contain metallic components. When multiple accessories that do not contain metallic components are supplied with the device, the device is tested with only the accessory that dictates the closest spacing to the body. Then multiple accessories that contain metallic components are test with the device with each accessory. If multiple accessories share an identical metallic component (i.e. the same metallic belt-chip used with different holsters with no other metallic components) only the accessory that dictates the closest spacing to the body is tested.

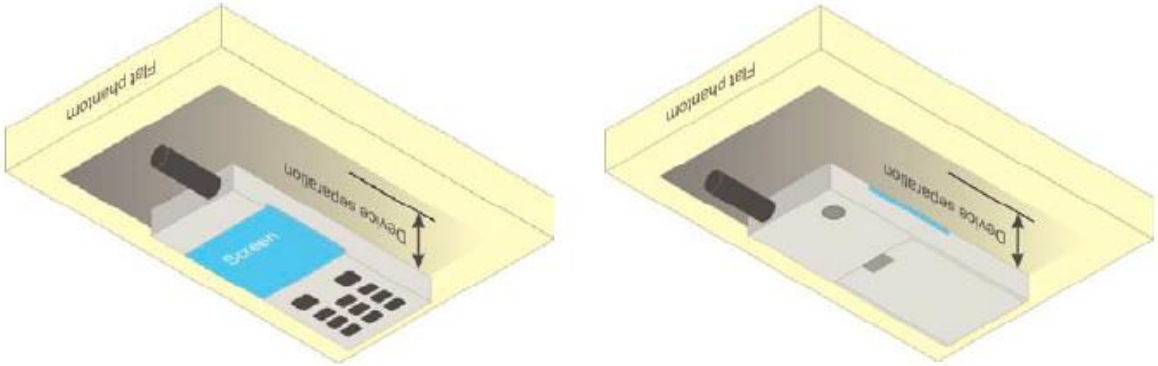

Picture18: Body Worn Position

11.3.5 Wireless Router

Some battery-operated handsets have the capability to transmit and receive user through simultaneous transmission of WIFI simultaneously with a separate licensed transmitter. The FCC has provided guidance in FCC KDB Publication 941225 D06v01r01 where SAR test considerations for handsets (L x W ≥ 9 cm x 5 cm) are based on a composite test separation distance of 10mm from the front, back and edges of the device containing transmitting antennas within 2.5cm of their edges, determined form general mixed use conditions for this type of devices. Since the hotspot SAR results may overlap with the body-worn accessory SAR requirements, the more conservative configurations can be considered, thus excluding some body-worn accessory SAR tests.

When the user enables the personal wireless router functions for the handset, actual operations include simultaneous transmission of both the WIFI transmitter and another licensed transmitter. Both transmitters often do not transmit at the same transmitting frequency and thus cannot be evaluated for SAR under actual use conditions due to the limitations of the SAR assessment probes. Therefore, SAR must be evaluated for each frequency transmission and mode separately and spatially summed with the WIFI transmitter according to FCC KDB Publication 447498 D01v05r02 publication procedures. The “Portable Hotspot” feature on the handset was NOT activated during SAR assessments, to ensure the SAR measurements were evaluated for a single transmission frequency RF signal at a time.

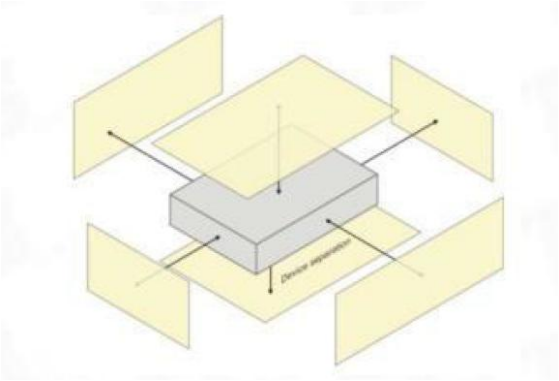

12. MEASUREMENT PROCEDURES

The measurement procedures are as below:
<Conducted power measurement>
(a) For WWAN power measurement, use base station simulator to configure EUT WWAN transition in conducted connection with RF cable, at maximum power in each supported wireless interface and frequency band.
(b) Read the WWAN RF power level from the base station simulator.
(c) For WLAN/BT power measurement, use engineering software to configure EUT WLAN/BT continuously transmission, at maximum RF power in each supported wireless interface and frequency band.
(d) Connect EUT RF port through RF cable to the power meter or spectrum analyzer, and measure WLAN/BT output power.

<SAR measurement>
(a) Use base station simulator to configure EUT WWAN transmission in radiated connection, and engineering software to configure EUT WLAN/BT continuously transmission, at maximum RF power, in the highest power channel.
(b) Place the EUT in positions as Appendix A demonstrates.
(c) Set scan area, grid size and other setting on the DASY software.
(d) Measure SAR results for the highest power channel on each testing position.
(e) Find out the largest SAR result on these testing positions of each band.
(f) Measure SAR results for other channels in worst SAR testing position if the Reported SAR or highest power channel is larger than 0.8 W/kg.

According to the test standard, the recommended procedure for assessing the peak spatial-average SAR value consists of the following steps:
(a) Power reference measurement
(b) Area scan
(c) Zoom scan
(d) Power drift measurement

12.1 Spatial Peak SAR Evaluation

The procedure for spatial peak SAR evaluation has been implemented according to the test standard. It can be conducted for 1g and 10g, as well as for user-specific masses. The DASY software includes all numerical procedures necessary to evaluate the spatial peak SAR value.

The base for the evaluation is a “cube” measurement. The measured volume must include the 1g and 10 g cubes with the highest averaged SAR values. For that purpose, the center of the measured volume is aligned to the interpolated peak SAR value of a previously performed area scan.

The entire evaluation of the spatial peak values is performed within the post-processing engine (SEMCAD). The system always gives the maximum values for 1g and 10g cubes. The algorithm to find the cube with highest averaged SAR is divided into the following stages:
(a) Extraction of the measured data (grid and values) from the Zoom Scan.
(b) Calculation of the SAR value at every measurement point based on all stored data (A/D values and measurement parameters).
(c) Generation of a high-resolution mesh within the measured volume.
(d) Interpolation of all measured values form the measurement grid to the high-resolution grid
(e) Extrapolation of the entire 3-D field distribution to the phantom surface over the distance from sensor to surface
(f) Calculation of the averaged SAR within masses of 1g and 10g.

12.2 Power Reference Measurement

The Power Reference Measurement and Power Drift Measurement are for monitoring the power drift of the device under test in the batch process. The minimum distance of probe sensors to surface determines the closest measurement point to phantom surface. This distance cannot be smaller than the distance of sensor calibration points to probe tip as defined in the probe properties.

12.3 Area & Zoom Scan Procedures

First Area Scan is used to locate the approximate location(s) of the local peak SAR value(s). The measurement grid within an Area Scan is defined by the grid extent, grid step size and grid offset. Next, in order to determine the EM field distribution in a three-dimensional spatial extension, Zoom Scan is required. The Zoom Scan is performed around the highest E-field value to determine the averaged SAR-distribution over 10g. Area scan and zoom scan resolution setting follows KDB 865664 D01v01r04 quoted below.

			≤ 3 GHz	> 3 GHz
Maximum distance from closest measurement point (geometric center of probe sensors) to phantom surface			5 mm ± 1 mm	½·δ·ln(2) mm ± 0.5 mm
Maximum probe angle from probe axis to phantom surface normal at the measurement location			30° ± 1°	20° ± 1°
Maximum area scan spatial resolution: Δx_{Area}, Δy_{Area}			≤ 2 GHz: ≤ 15 mm 2 – 3 GHz: ≤ 12 mm	3 – 4 GHz: ≤ 12 mm 4 – 6 GHz: ≤ 10 mm
			When the x or y dimension of the test device, in the measurement plane orientation, is smaller than the above, the measurement resolution must be ≤ the corresponding x or y dimension of the test device with at least one measurement point on the test device.	
Maximum zoom scan spatial resolution: Δx_{Zoom}, Δy_{Zoom}			≤ 2 GHz: ≤ 8 mm 2 – 3 GHz: ≤ 5 mm*	3 – 4 GHz: ≤ 5 mm* 4 – 6 GHz: ≤ 4 mm*
Maximum zoom scan spatial resolution, normal to phantom surface	uniform grid: $\Delta z_{Zoom}(n)$		≤ 5 mm	3 – 4 GHz: ≤ 4 mm 4 – 5 GHz: ≤ 3 mm 5 – 6 GHz: ≤ 2 mm
	graded grid	$\Delta z_{Zoom}(1)$: between 1st two points closest to phantom surface	≤ 4 mm	3 – 4 GHz: ≤ 3 mm 4 – 5 GHz: ≤ 2.5 mm 5 – 6 GHz: ≤ 2 mm
		$\Delta z_{Zoom}(n>1)$: between subsequent points	≤ 1.5·$\Delta z_{Zoom}(n-1)$ mm	
Minimum zoom scan volume	x, y, z		≥ 30 mm	3 – 4 GHz: ≥ 28 mm 4 – 5 GHz: ≥ 25 mm 5 – 6 GHz: ≥ 22 mm

Note: δ is the penetration depth of a plane-wave at normal incidence to the tissue medium; see IEEE Std 1528-2013 for details.

* When zoom scan is required and the *reported* SAR from the *area scan based 1-g SAR estimation* procedures of KDB Publication 447498 is ≤ 1.4 W/kg, ≤ 8 mm, ≤ 7 mm and ≤ 5 mm zoom scan resolution may be applied, respectively, for 2 GHz to 3 GHz, 3 GHz to 4 GHz and 4 GHz to 6 GHz.

12.4 Volume Scan Procedures

The volume scan is used for assess overlapping SAR distributions for antennas transmitting in different frequency bands. It is equivalent to an oversized zoom scan used in standalone measurements. The measurement volume will be used to enclose all the simultaneous transmitting antennas. For antennas transmitting simultaneously in different frequency bands, the volume scan is measured separately in each frequency band. In order to sum correctly to compute the 1g aggregate SAR, the EUT remain in the same test position for all measurements and all volume scan use the same spatial resolution and grid spacing. When all volume scan were completed, the software, SEMCAD post-processor scan combine and subsequently superpose these measurement data to calculating the multiband SAR.

12.5 SAR Averaged Methods

In DASY, the interpolation and extrapolation are both based on the modified Quadratic Shepard's method. The interpolation scheme combines a least-square fitted function method and a weighted average method which are the two basic types of computational interpolation and approximation.

Extrapolation routines are used to obtain SAR values between the lowest measurement points and the inner phantom surface. The extrapolation distance is determined by the surface detection distance and the probe sensor offset. The uncertainty increases with the extrapolation distance. To keep the uncertainty within 1% for the 1g and 10g cubes, the extrapolation distance should not be larger than 5 mm.

12.6 Power Drift Monitoring

All SAR testing is under the EUT install full charged battery and transmit maximum output power. In DASY measurement software, the power reference measurement and power drift measurement procedures are used for monitoring the power drift of EUT during SAR test. Both these procedures measure the field at a specified reference position before and after the SAR testing. The software will calculate the field difference in dB. If the power drifts more than 5%, the SAR will be retested.

13. TEST RESULTS

13.1 Conducted Power Results

Test Condition:

1. Conducted Measurement
   EUT was set for low, mid, high channel with modulated mode and highest RF output power.
   The base station simulator was connected to the antenna terminal.

2 Conducted Emissions Measurement Uncertainty
All test measurements carried out are traceable to national standards. The uncertainty of the measurement at a confidence level of approximately 95% (in the case where distributions are normal), with a coverage factor of 2, in the range 30MHz – 40GHz is ±1.5dB.

3 Environmental Conditions

Temperature	22°C
Relative Humidity	55%
Atmospheric Pressure	1009mbar

13.1.1 Wi-Fi

13.1.1.1 WLAN 2.4 GHz Band Conducted Power

Mode	Channel number	Frequency (MHz)	Data rate (Mbps)	Output Power (dBm)	Tune up (dBm)
802.11b	1	2412	1	**15.77**	16
	6	2437	1	**15.71**	16
	11	2462	1	**15.82**	16
802.11g	1	2412	6	**21.12**	21.5
	6	2437	6	**21.14**	21.5
	11	2462	6	**21.18**	21.5
802.11n(HT20)	1	2412	MCS0	21.04	21.5
	6	2437	MCS0	21.04	21.5
	11	2462	MCS0	21.07	21.5
802.11n(HT40)	3	2422	MCS0	19.34	20
	6	2437	MCS0	19.34	20
	9	2452	MCS0	19.27	20

13.1.1.2 WLAN 5GHz Band Conducted Power

Mode	Frequency (MHz)	Data rate (Mbps)	Output Power (dBm)	Tune up (dBm)
802.11a	5180	6	11.18	11.5
802.11a	5200	6	**11.23**	11.5
802.11a	5240	6	11.14	11.5
802.11a	5260	6	11.15	11.5
802.11a	5280	6	**11.15**	11.5
802.11a	5320	6	10.83	11.5
802.11a	5500	6	10.85	11.5
802.11a	5580	6	9.28	11.5
802.11a	5700	6	**11.11**	11.5
802.11a	5745	6	**10.93**	11
802.11a	5785	6	10.72	11
802.11a	5825	6	10.74	11
802.11n20	5180	MCS0	10.95	11
802.11n20	5200	MCS0	10.94	11
802.11n20	5240	MCS0	10.39	11
802.11n20	5260	MCS0	10.9	11
802.11n20	5280	MCS0	10.84	11
802.11n20	5320	MCS0	10.49	11
802.11n20	5500	MCS0	10.5	11
802.11n20	5580	MCS0	8.6	11
802.11n20	5700	MCS0	10.32	11
802.11n20	5745	MCS0	10.18	11
802.11n20	5785	MCS0	9.88	11
802.11n20	5825	MCS0	9.91	11
802.11n40	5190	MCS0	11.01	11.5
802.11n40	5230	MCS0	10.91	11.5
802.11n40	5270	MCS0	11	11.5
802.11n40	5310	MCS0	10.73	11.5
802.11n40	5510	MCS0	10.49	11.5
802.11n40	5550	MCS0	9.21	11.5
802.11n40	5670	MCS0	10.15	11.5
802.11n40	5755	MCS0	10.79	11.5
802.11n40	5795	MCS0	10.6	11.5
802.11ac20	5180	MCS0	10.92	11.5
802.11ac20	5200	MCS0	10.91	11.5
802.11ac20	5240	MCS0	10.91	11.5
802.11ac20	5260	MCS0	10.9	11.5
802.11ac20	5280	MCS0	10.91	11.5
802.11ac20	5320	MCS0	10.53	11.5
802.11ac20	5500	MCS0	10.63	11.5
802.11ac20	5580	MCS0	9.17	11.5
802.11ac20	5700	MCS0	10.92	11.5
802.11ac20	5745	MCS0	10.79	11.5
802.11ac20	5785	MCS0	10.54	11.5
802.11ac20	5825	MCS0	10.58	11.5
802.11ac40	5190	MCS0	10.66	11.5
802.11ac40	5230	MCS0	11.14	11.5
802.11ac40	5270	MCS0	11.13	11.5
802.11ac40	5310	MCS0	10.86	11.5
802.11ac40	5510	MCS0	10.62	11.5
802.11ac40	5550	MCS0	9.19	11.5

802.11ac40	5670	MCS0	10.26	11.5
802.11ac40	5755	MCS0	10.91	11.5
802.11ac40	5795	MCS0	10.78	11.5
802.11ac80	5210	MCS0	9.93	10
802.11ac80	5290	MCS0	9.83	10
802.11ac80	5530	MCS0	9.34	10
802.11ac80	5610	MCS0	9.45	10
802.11ac80	5690	MCS0	9.92	10
802.11ac80	5775	MCS0	9.59	10

13.1.2 Bluetooth

Maximum Output Power for Bluetooth (BR)

Mode	Channel number	Frequency (MHz)	Output Power(dBm)	Tune up (dBm)
GFSK	0	2402	4.38	5.5
	39	2441	4.84	5.5
	78	2480	5.32	5.5

Maximum Output Power for Bluetooth (BLE)

Data Rates	Channel number	Frequency (MHz)	Output Power(dBm)	Tune up (dBm)
1 Mbps	0	2402	-9.45	-8
	19	2440	-8.58	-8
	39	2480	-8.2	-8

Note:

1. Per KDB 447498 D01v06, the 1-g SAR test exclusion thresholds for 100 MHz to 6 GHz at test separation distances ≤50 mm are determined by:
   [(max. power of channel, including tune-up tolerance, mW)/ (min. test separation distance, mm)] · [√f(GHz)] ≤ 3.0 for1-g SAR, where
   - f(GHz) is the RF channel transmit frequency in GHz
   - Power and distance are rounded to the nearest mW and mm before calculation
   - The result is rounded to one decimal place for comparison

Mode	Frequency (GHz)	Max. tune-up Power (dBm)	Max. Power (mW)	Test distance (mm)	Result	exclusion thresholds for 1-g SAR
Bluetooth	2.480	5.5	3.55	5	1.12	3.0

2. The max. tune-uppower wasprovided by manufacturer,base on the result of note 1, RF exposure evaluation is not required.
3. The output power of all data rate were pre-scan, just the worst case of all mode were shown in report.
4. When the minimum test separation distance is < 5 mm, a distance of 5 mm according is applied to determine SAR test exclusion.

13.2 SAR TEST RESULTS

SAR Values of Body-worn

Band	Mode	Test Position	Channel	Power(dBm)		SAR 1g(W/Kg), Limit (1.6W/kg)	
				Maximum Tune-up (dBm)	Conducted Power (dBm)	Measured SAR 1g(W/kg)	Scaled SAR 1g(W/kg)
WLAN 2.4GHz	802.11b	Back Side	1	16.0	15.77	1.021	1.077
WLAN 2.4GHz	802.11b (repetition)	Back Side	1	16.0	15.77	1.005	1.060
WLAN 2.4GHz	802.11b	Back Side	6	16.0	15.71	0.988	1.056
WLAN 2.4GHz	802.11b (repetition)	Back Side	6	16.0	15.71	0.975	1.042
WLAN 2.4GHz	802.11b	Back Side	11	16.0	15.82	1.170	**1.220**
WLAN 2.4GHz	802.11b (repetition)	Back Side	11	16.0	15.82	1.060	1.105
WLAN 2.4GHz	802.11b	Top Side	11	16.0	15.82	0.796	0.830
WLAN 2.4GHz	802.11g	Back Side	1	21.5	21.12	1.130	1.233
WLAN 2.4GHz	802.11g (repetition)	Back Side	1	21.5	21.12	1.121	1.224
WLAN 2.4GHz	802.11g	Back Side	6	21.5	21.14	1.040	1.130
WLAN 2.4GHz	802.11g (repetition)	Back Side	6	21.5	21.14	1.013	1.101
WLAN 2.4GHz	802.11g	Back Side	11	21.5	21.18	1.230	**1.324**
WLAN 2.4GHz	802.11g (repetition)	Back Side	11	21.5	21.18	1.190	1.281
WLAN 2.4GHz	802.11g	Top Side	11	21.5	21.18	0.798	0.859
WLAN 5GHz	802.11a	Back Side	40	11.5	11.23	0.330	**0.351**
WLAN 5GHz	802.11a	Top Side	40	11.5	11.23	0.314	0.334
WLAN 5GHz	802.11a	Back Side	56	11.5	11.15	0.410	**0.444**
WLAN 5GHz	802.11a	Top Side	56	11.5	11.15	0.367	0.398
WLAN 5GHz	802.11a	Back Side	140	11.5	11.11	0.294	**0.322**
WLAN 5GHz	802.11a	Top Side	140	11.5	11.11	0.167	0.183
WLAN 5GHz	802.11a	Back Side	149	11.0	10.93	0.447	**0.454**
WLAN 5GHz	802.11a	Top Side	149	11.0	10.93	0.312	0.317

Note:

1. Per KDB Publication 248227 D01 When the reported SAR of the highest measured maximum output power channel is ≤ 0.8 W/kg, no further SAR testing is required for other channels in that exposure configuration.
2. Per KDB 616217 D04, when the overall diagonal dimension of the keyboard and/or display section of a laptop or tablet is > 20 cm, the test distance is 0mm. SAR must be measured for all sides and surfaces with a transmitting antenna located within 25mm from that surface or edge. Exposures from antennas through the front (top) surface of the display section of a full-size tablet, away from the edges, are generally limited to the user's hands. Exposures to hands for typical consumer transmitters used in tablets are not expected to exceed the extremity SAR limit; therefore, SAR evaluation for the front surface of tablet display screens are generally not necessary.

13.3 Measurement variability consideration

In accordance with published RF Exposure KDB 865664 D01 SAR measurement 100 MHz to 6 GHz. These additional measurements are repeated after the completion of all measurements requiring the same head or body tissue-equivalent medium in a frequency band. The test device should be returned to ambient conditions (normal room temperature) with the battery fully charged before it is re-mounted on the device holder for the repeated measurement(s) to minimize any unexpected variations in the repeated results.

1. Repeated measurement is not required when the original highest measured SAR is < 0.8 or 2 W/kg (1-g or 10-g respectively); steps 2) through 4) do not apply.
2. When the original highest measured SAR is ≥ 0.8 or 2 W/kg (1-g or 10-g respectively), repeat that measurement once.
3. Perform a second repeated measurement only if the ratio of largest to smallest SAR for the original and first repeated measurements is > 1.20 or when the original or repeated measurement is ≥ 1.45 or 3.6 W/kg (~ 10% from the 1-g or 10-g respective SAR limit).
4. Perform a third repeated measurement only if the original, first, or second repeated measurement is ≥ 1.5 or 3.75 W/kg (1-g or 10-g respectively) and the ratio of largest to smallest SAR for the original, first and second repeated measurements is > 1.20.

13.4 Repeated SAR

Band	Channel	Mode	RF Exposure	Test Position	Repeated SAR (Yes/No)	Original Highest Measured SAR (W/kg)	First Repeated Measurement SAR(W/kg)	largest to smallest SAR Ratio
WLAN 2.4GHz	1	802.11b	Body	Back Side	Yes	1.021	1.005	1.02
WLAN 2.4GHz	6	802.11b	Body	Back Side	Yes	0.988	0.975	1.01
WLAN 2.4GHz	11	802.11b	Body	Back Side	Yes	1.170	1.060	1.10
WLAN 2.4GHz	1	802.11g	Body	Back Side	Yes	1.130	1.121	1.01
WLAN 2.4GHz	6	802.11g	Body	Back Side	Yes	1.040	1.013	1.03
WLAN 2.4GHz	11	802.11g	Body	Back Side	Yes	1.230	1.190	1.03

Note: Second Repeated Measurement is not required since the ratio of the largest to smallest SAR for the original and first repeated measurement is < 1.20.

13.5 Simultaneous Transmission SAR Analysis.

WLAN 2.4GHz, WLAN 5GHz and Bluetooth share the same antenna, and cannot transmit simultaneously.

13.6 Simultaneous Transmission SAR Value

Not Applicable

13.7 MAXIMUM GRAPH RESULTS

The graph results see ANNEX C.

14. MEASUREMENT UNCERTAINTY

14.1 Uncertainty for SAR Test

Uncertainty Component	Tol. (%)	Prob Dist.	Div	ci (10g)	ci.ui(%) (10g)	vi
Probe Calibration	±6.7	N	1	1	±6.7	∞
Axial Isotropy	±0.5	R	$\sqrt{3}$	1	±0.3	∞
Hemispherical Isotropy	±2.6	R	$\sqrt{3}$	1	±1.5	∞
Linearity	±0.6	R	$\sqrt{3}$	1	±0.3	∞
Probe modulation response	±2.4	R	$\sqrt{3}$	1	±1.4	∞
Detection Limits	±1.0	R	$\sqrt{3}$	1	±0.6	∞
Boundary Effect	±2.0	R	$\sqrt{3}$	1	±1.2	∞
Readout Electronics	±0.3	N	1	1	±0.3	∞
Response Time	±0.8	R	$\sqrt{3}$	1	±0.5	∞
Integration Time	±2.6	R	$\sqrt{3}$	1	±1.5	∞
RF Ambient Conditions - Noise	±3.0	R	$\sqrt{3}$	1	±1.7	∞
RF Ambient Conditions - Reflections	±3.0	R	$\sqrt{3}$	1	±1.7	∞
Probe Positioner Mech. Restrictions	±0.8	R	$\sqrt{3}$	1	±0.5	∞
Probe Positioning with respect to Phantom Shell	±6.7	R	$\sqrt{3}$	1	±3.9	∞
Post-processing	±4.0	R	$\sqrt{3}$	1	±2.3	∞
Test Sample Related						
Device Holder Uncertainty	±3.6	N	1	1	±3.6	M-1
Test Sample Positioning	±2.9	N	1	1	±2.9	M-1
Power scaling	±0.0	R	$\sqrt{3}$	1	±0.0	∞
Drift of output power (measured SAR drift)	±5.0	R	$\sqrt{3}$	1	±2.9	∞
Phantom and Tissue Parameters						
Phantom Uncertainty (shape and thickness tolerances)	±7.6	R	$\sqrt{3}$	1	±4.4	∞
Algorithm for correcting SAR for deviations in permittivity and conductivity	±1.9	N	1	0.84	±1.3	∞
Liquid conductivity(meas.)	±2.5	N	1	0.71	±1.3	M-1
Liquid permittivity(meas.)	±2.5	N	1	0.26	±0.2	M
Liquid permittivity - temperature uncertainty	±3.4	R	$\sqrt{3}$	0.71	±1.0	∞
Liquid conductivity - temperature uncertainty	±0.4	R	$\sqrt{3}$	0.26	±0.0	∞
Combined Standard Uncertainty	±11.6					
Expanded STD Uncertainty	±23.2					

14.2 Uncertainty for System Validation

Uncertainty Component	Tol. (%)	Prob Dist.	Div	Ci (10g)	ci.ui(%) (10g)	vi
Probe Calibration	±6.7	N	1	1	±6.7	∞
Axial Isotropy	±0.5	R	$\sqrt{3}$	1	±0.3	∞
Hemispherical Isotropy	±2.6	R	$\sqrt{3}$	1	±1.5	∞
Linearity	±0.6	R	$\sqrt{3}$	1	±0.3	∞
Modulation response	±0.0	R	$\sqrt{3}$	1	±0.0	∞
Detection Limits	±1.0	R	$\sqrt{3}$	1	±0.6	∞
Boundary Effect	±1.0	R	$\sqrt{3}$	1	±0.6	∞
Readout Electronics	±0.3	N	1	1	±0.3	∞
Response Time	±0.0	R	$\sqrt{3}$	1	±0.0	∞
Integration Time	±0.0	R	$\sqrt{3}$	1	±0.0	∞
RF Ambient Conditions - Noise	±1.0	R	$\sqrt{3}$	1	±0.6	∞
RF Ambient Conditions - Reflections	±1.0	R	$\sqrt{3}$	1	±0.6	∞
Probe Positioner Mech. Restrictions	±0.8	R	$\sqrt{3}$	1	±0.5	∞
Probe Positioning with respect to Phantom Shell	±6.7	R	$\sqrt{3}$	1	±3.9	∞
Post-processing	±4.0	R	$\sqrt{3}$	1	±2.3	∞
Field source						
Deviation of the experimental source from numerical source	±5.5	N	1	1	±5.5	∞
Source to liquid distance	±2.0	R	$\sqrt{3}$	1	±1.2	∞
Drift of output power (measured SAR drift)	±3.4	R	$\sqrt{3}$	1	±2.0	∞
Phantom and Setup						
Phantom Uncertainty (shape and thickness tolerances)	±4.0	R	$\sqrt{3}$	1	±2.3	∞
Algorithm for correcting SAR for deviations in permittivity and conductivity	±1.9	N	1	0.84	±1.3	∞
Liquid conductivity(meas.)	±2.5	N	1	0.21	±0.1	M
Liquid permittivity(meas.)	±2.5	N	1	0.26	±0.2	M
Liquid permittivity - temperature uncertainty	±1.7	R	$\sqrt{3}$	0.71	±0.5	1
Liquid conductivity - temperature uncertainty	±0.3	R	$\sqrt{3}$	0.26	±0.0	∞
Combined Std. Uncertainty	±10.2					
Expanded STD Uncertainty	±20.4					

15. TEST EQUIPMENT LIST

Equipment No.	Equipment	Manufacturer	Model No.	Serial No.	Cal. Date	Cal. Interval
SZ060-01	SAR Test System	SPEAG	DASY52 SAR TX90XL	F14/5YJ0B1 /A/01	2026-05-22	1 year
SZ060-01-01	E-Field Probe	SPEAG	EX3DV4	7322	2026-05-22	1 year
SZ060-01-10	System Validation Dipole	SPEAG	D2450V2	966	2024-11-06	3 year
SZ060-01-12	System Validation Dipole	SPEAG	D5GHzV2	1218	2024-11-05	3 year
SZ060-01-13	Data Acquisition Unit	SPEAG	DAE4	1473	2026-06-18	1 year
SZ060-01-14	Dielectric Assessment Kit	SPEAG	DAKS 3.5	1056	2026-08-31	1 year
SZ060-01-15	Vector Reflectometer	Copper Mountain Technologies	Planar R140	0090614	2026-07-20	1 year
SZ060-01-16	Thermometer	LKM electronics GmbH	DTM3000	3477	2025-12-25	1 year
SZ060-01-17	Power Amplifier	Mini Circuits	ZHL-42W+	QA1449003	2026-05-01	1 year
SZ060-01-18	Power Amplifier	Mini Circuits	ZVE-8G+	111701437	2026-05-01	1 year
SZ060-01-19	SAM Twin Phantom	SPEAG	SAM Twin Phantom V5.0	1888	N/A	N/A
SZ060-01-20	SAM Twin Phantom	SPEAG	SAM Twin Phantom V5.0	1891	N/A	N/A
SZ060-01-21	ELI Phantom	SPEAG	ELI Phantom V6.0	2033	N/A	N/A
SZ180-13	MXG Vector Signal Generator	Keysight	N5182B	MY53051328	2025-09-15	1 year
SZ070-04	Directional Bridge	Agilent	86205A	MY31402141	2025-12-02	1 year
SZ182-02	RF Power Meter	Anritsu	ML2496A	1302005	2026-04-13	1 year
SZ182-02-01	Pulse Power Sensor	Anritsu	MA2411B	1207429	2026-04-13	1 year
SZ182-03	Average power sensor	R&S	NRP-Z22	101689	2026-04-13	1 year
SZ065-06	Wideband Radio Communication Tester	R&S	CMW500	154161	2026-07-13	1 year
N/A	Device Holder	SPEAG	N/A	N/A	N/A	N/A

ANNEX A: TEST LAYOUT AND SETUP

The graph results see ANNEX A of 260824006SZN-005-Appendix A.

ANNEX B: SYSTEM CHECK RESULTS

The graph results see ANNEX B of 260824006SZN-005-Appendix A.

ANNEX C: MAXIMUM GRAPH RESULTS

The graph results see ANNEX C of 260824006SZN-005-Appendix A.

ANNEX D: SYSTEM VALIDATION

The graph results see ANNEX D of 260824006SZN-005-Appendix A.

ANNEX E: EUT PHOTO

The EUT photos are saved with filename: external photos.pdf & internal photos.pdf.

ANNEX F: PROBE CALIBRATION CERTIFICATE

The graph results see 260824006SZN-005-Appendix B.

ANNEX G: DIPOLE CALIBRATION CERTIFICATE

The graph results see 260824006SZN-005-Appendix B.

ANNEX H: DAE CALIBRATION CERTIFICATE

The graph results see 260824006SZN-005-Appendix B.

**********End the Report**********