Cleaning

For FAQs and more information, please visit:

www.eufylife.com

Owner's Manual

RoboVac 11+

T2104 51005001010 V07

Table of Contents

02 About Your RoboVac
What's In the Box
RoboVac Anatomy

06 Using Your RoboVac
Important Tips Before Use
Install the Charging Base
Charge Your RoboVac
Start / Stop Cleaning
Select a Cleaning Mode
Set Time and Schedule Cleaning

14 Cleaning and Maintenance
Clean the Dust Collector and Filters
Clean the Rolling Brush
Clean the Sensors and Charging Pins
Clean the Side Brushes
Replace the Side Brushes

17 Troubleshooting

19 Specifications

19 Customer Service

Thank you for purchasing RoboVac 11+. Read all instructions before using this product, and keep it properly for future reference.

About Your RoboVac

What's In the Box

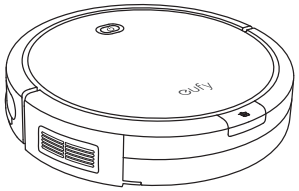

RoboVac 11+

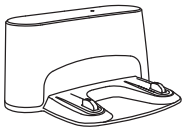

Charging Base

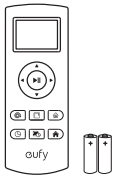

Remote Control
(AAA Battery ×2)

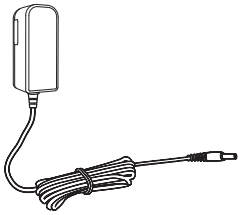

Power Adapter

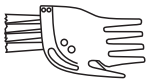

Cleaning Tool

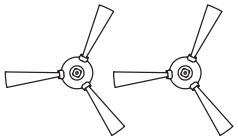

Additional Side
Brushes (×2)

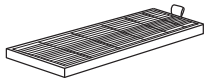

Additional High-
Performance Filter

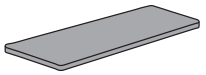

Additional Foam Filter

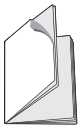

Owner's Manual &
Other Documents

RoboVac Anatomy

Top & Side

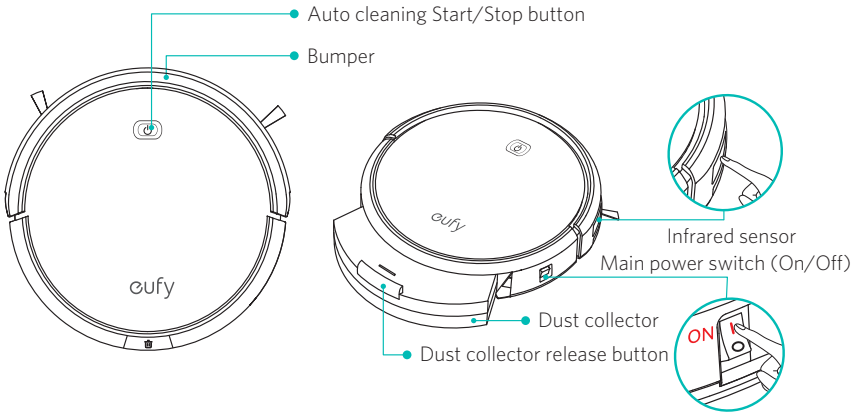

Bottom

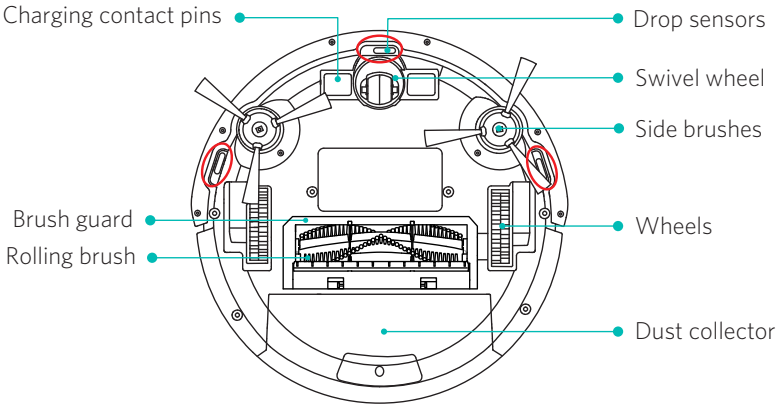

Dust Collector

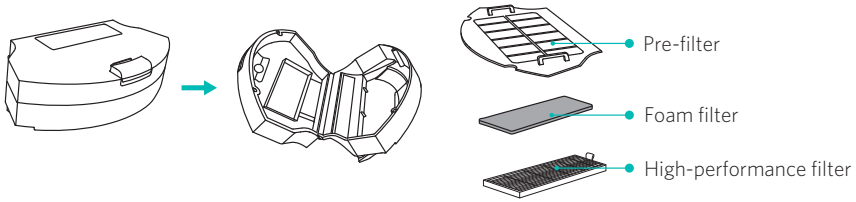

Suction Inlet

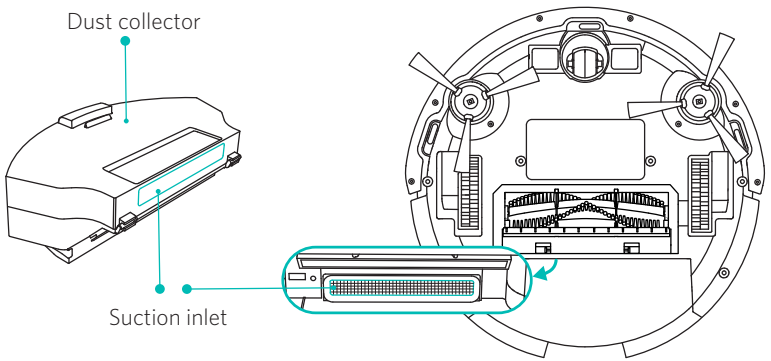

Charging Base

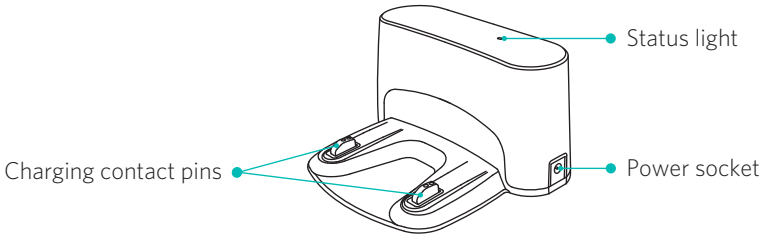

Remote Control

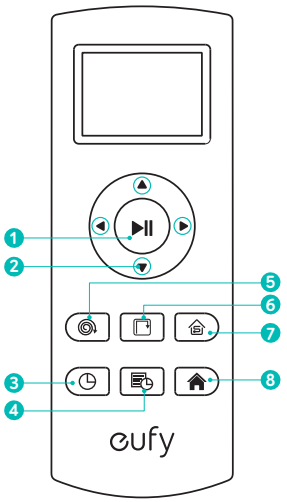

1. Start/Stop Auto cleaning
2. Control cleaning direction manually
   Adjust the hour and minute
3. Set the current time
4. Schedule Auto cleaning start time
5. Start Spot cleaning
6. Start Edge cleaning
7. Start Single Room cleaning
8. Return RoboVac to Charging Base

Install 2 AAA batteries before using the remote control for the first time. Make sure the positive and negative ends are facing the correct polarity direction as marked in the battery compartment.

Using Your RoboVac

Important Tips Before Use

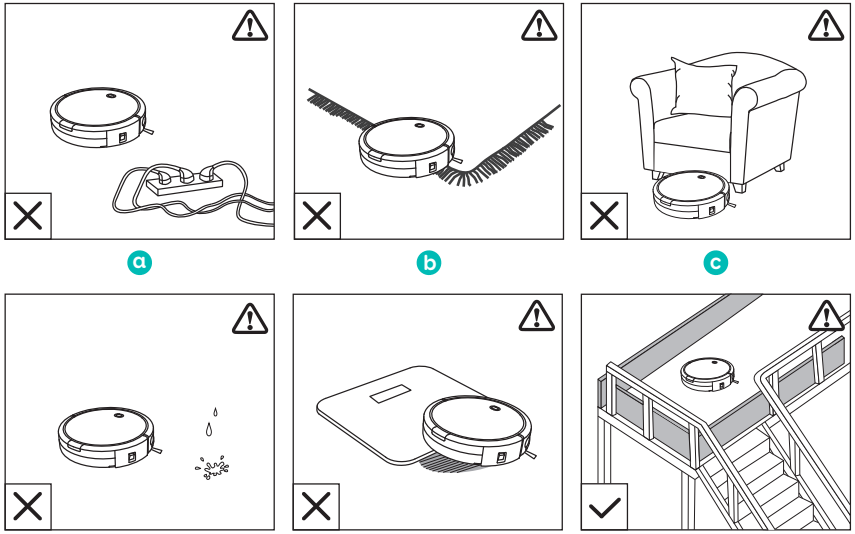

a b c

d e f

a Remove power cords and small objects from the floor that may entangle RoboVac.

b Fold tasseled edges of area rugs underneath to prevent tangling RoboVac. Avoid cleaning very dark-colored high-pile rugs or rugs thicker than 0.87 in/22 mm as they may cause RoboVac to malfunction.

c Keep RoboVac away from spaces lower than 3.9 in/100 mm to prevent RoboVac from getting stuck. If necessary, place a physical barrier to block off the problem areas.

d Keep RoboVac away from wet areas.

e RoboVac may climb on top of objects less than 0.59 in/15mm in height. Remove these objects if possible.

f Anti-drop sensors prevent RoboVac from tumbling down stairs and steep drops. They may work less effectively if dirty or used on reflective/very dark-colored floors. It is recommended to place physical barriers to block off areas where RoboVac may fall.

Place physical barriers in front of fireplaces and areas that may cause damage to RoboVac if entered.

Install the Charging Base

1 Place the Charging Base on a hard, level surface and against a wall.

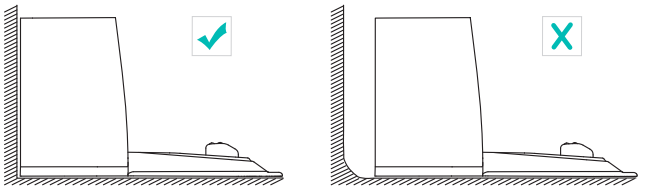

2 Remove objects within 3 ft/1 m of the left and right side and within 6 ft/2 m of the front of the charging base.

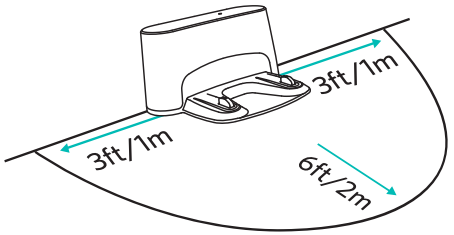

3 Connect the round connector of the adapter into the power socket on the Charging Base and the other end into a wall outlet.

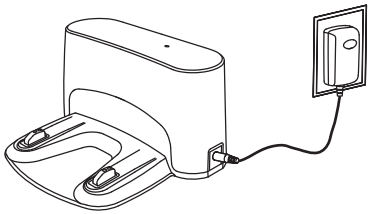

- Install the Charging Base in a location that RoboVac can easily access.

- Always keep the Charging Base plugged in, otherwise RoboVac will not automatically return to it.

- The LED indicator on the Charging Base is SOLID GREEN when RoboVac is NOT docked.

- The LED indicator on the Charging Base is OFF when RoboVac is docked.

Charge Your RoboVac

- RoboVac has a pre-installed rechargeable battery that has to be fully charged before use.
- RoboVac returns to the Charging Base at the end of a cleaning cycle or when its battery is running low.
- Make sure the main power switch on the side of RoboVac is turned on before charging.

Method 1: Attach RoboVac to the Charging Base by aligning its charging pins with the charging pins on the base.

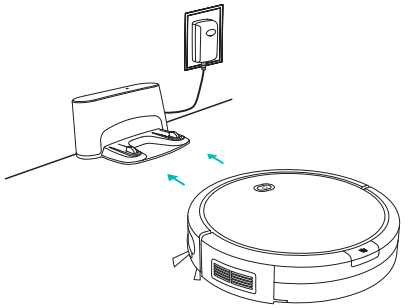

Method 2: Press ⌂ on the remote control to return RoboVac to the Charging Base.

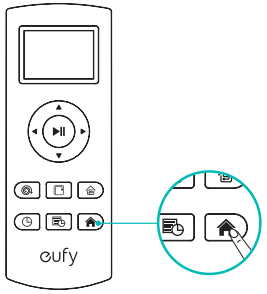

⏻ (Status Light)	Status
Breathing blue	Charging
Solid blue	Standby / Cleaning / Returning to Charging Base
Solid purplish-red	Low power and returning to Charging Base
Flashing / Solid red + Beeping	RoboVac has an error
Off	• RoboVac is off • To conserve power, the light automatically turns off: ◦ When RoboVac is not docked to the Charging Base and has been inactive for 10 minutes ◦ After RoboVac is docked to the Charging Base and has been fully charged for 10 minutes

Turn off the power switch if RoboVac will not be used for a long period of time. To preserve the battery's lifespan, recharge at least once every 3 months.

Start / Stop Cleaning

1. Turn on the main power supply

Press the main power switch on the side of RoboVac to turn on the main power supply.

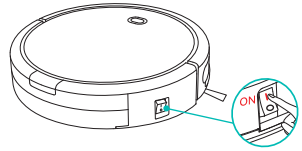

2. Start cleaning

Press ⏻ on RoboVac or ▶II on the remote control to start cleaning in Auto mode.

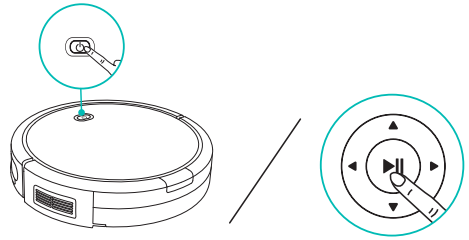

3. Stop cleaning

Press ⏻ on RoboVac or ▶II on the remote control to stop cleaning.

Select a Cleaning Mode

1. Auto cleaning

RoboVac automatically cleans in a back-and-forth, straight-line pattern. This is the most commonly used cleaning mode.

Press ⏻ on RoboVac or ▶II on the remote control to start cleaning in Auto Mode.

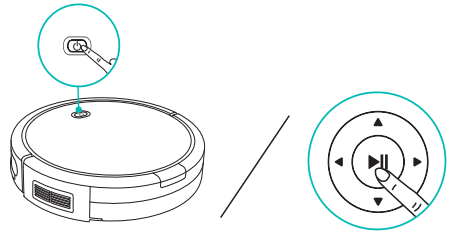

- *RoboVac will return to the Charging Base automatically when the battery level becomes low or when RoboVac finishes cleaning.*
- *By default, RoboVac starts in Auto cleaning mode when it is turned on.*

BoostIQ™ Feature

When the BoostIQ™ feature is enabled, RoboVac will automatically increase the suction power if it detects stronger power is needed to ensure the best clean. BoostIQ™ is ideal for cleaning thicker carpets and hard-to-sweep messes, which will reduce the total cleaning time, but increase the noise level. If the vacuuming noise caused by BoostIQ™ disturbs you, you can disable this feature. This feature only works in Auto and Single Room cleaning modes.

To adjust the suction power level in Auto or Single Room cleaning mode, simultaneously press and hold the ⌂ and ▼ buttons for 2 seconds; you will hear a series of beeps that correspond to the suction power selected. Repeat to adjust the suction power level.

Suction Power Level	Beeps
Standard power	●
BoostIQ™ (Default, automatically switches between Standard and Enhanced power)	●●
Maximum power	●●●

When RoboVac starts cleaning in Auto or Single Room mode the next time, it will clean according to the suction power level you previously selected.

2. Spot cleaning

RoboVac intensively cleans a specific area in a spiral pattern, useful if there is a concentrated area of dust or debris. In Spot mode, RoboVac will stop cleaning after 2 minutes.

Press ◎ on the remote control to start cleaning in Spot Mode.

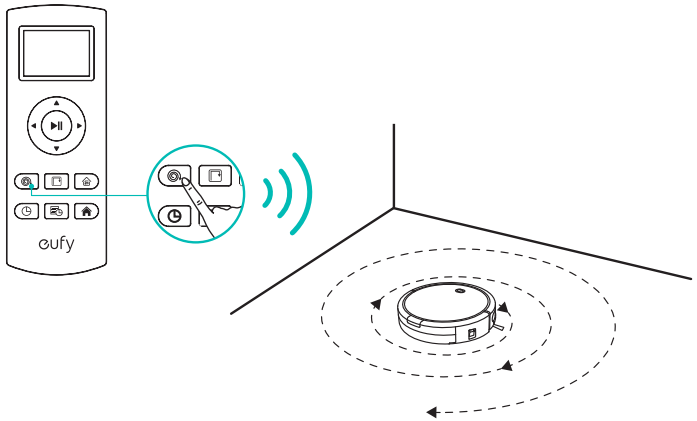

3. Edge cleaning

RoboVac reduces its speed when it detects a wall and then follows the wall to ensure the edge is cleaned thoroughly. In Edge mode, RoboVac will clean for 20 minutes and return to the Charging Base.

Press ▢ on the remote control to start cleaning in Edge Mode.

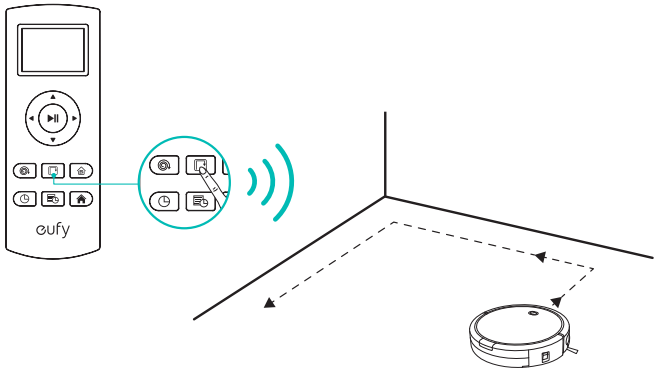

4. Single Room cleaning

RoboVac intensively cleans one single room and stops after 30 minutes. Select this mode only when one specific room needs to be cleaned. Make sure to confine RoboVac to the room by closing the door.

Press ⌂ on the remote control to start cleaning in Single Room Mode.

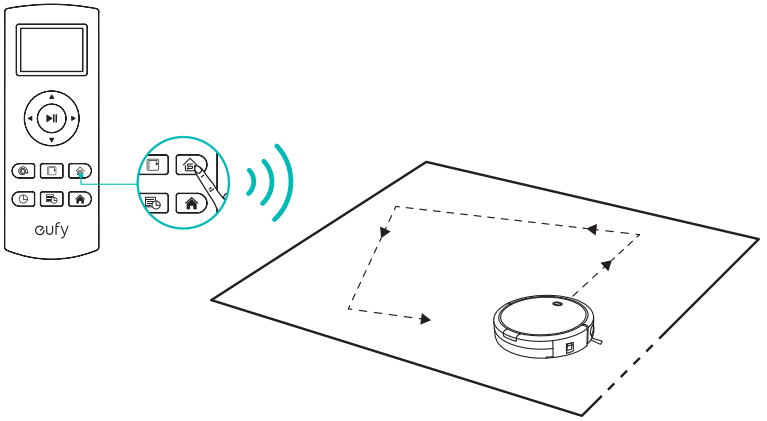

5. Manual cleaning

You can direct RoboVac to clean a particular area by using the directional buttons on the remote control.

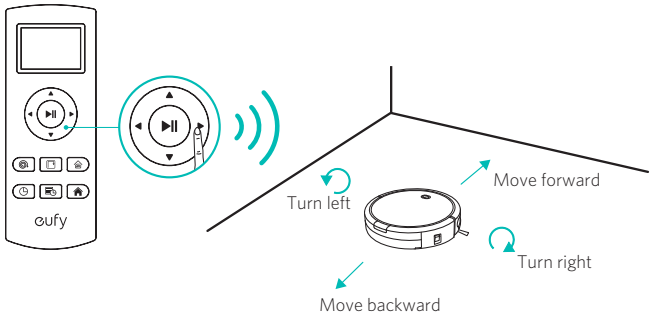

Set Time and Schedule Cleaning

1. Set Time

Make sure the time is set correctly to your local time before setting a scheduled cleaning.

1. Make sure the main power switch on the side of RoboVac is turned on.
2. Press ⏲ on the remote control. ⏲ will blink on the display.
3. Press ▲▼◀ ▶ to set the "hour" and "minute".

   Note: Make sure AM/PM is set correctly.
4. Press ⏲ or ▶II to save the setting. RoboVac will **BEEP ONCE** to indicate the time has been set.

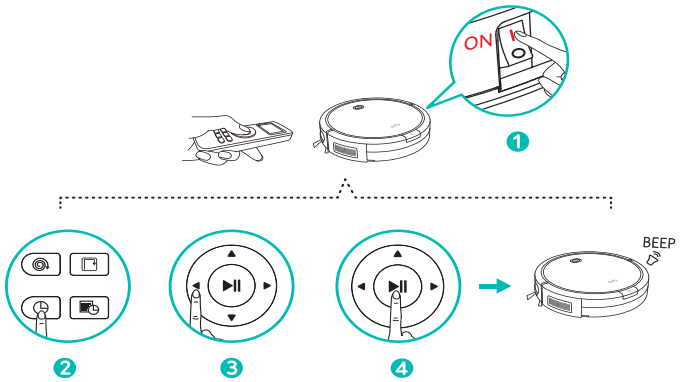

To ensure the time is set successfully, make sure RoboVac is turned on. You will hear a beep when the time has been set.

2. Set a Scheduled Cleaning

You can schedule RoboVac to start cleaning at a specified time. To cancel a previously scheduled cleaning, press and hold for 3 seconds until RoboVac beeps twice and disappears.

1. Before setting a scheduled cleaning, make sure the time has been set correctly to your local time; refer to the previous section "**Set Time**" for how to set time.
2. Make sure the main power switch on the side of RoboVac is turned on.
3. Press on the remote control. will blink on the display.
4. Press ▲▼◀ ▶ to set the "hour" and "minute".

   Note: Make sure AM/PM is set correctly.
5. Press or ▶II to save the setting. RoboVac will **BEEP ONCE** to indicate the schedule has been set.

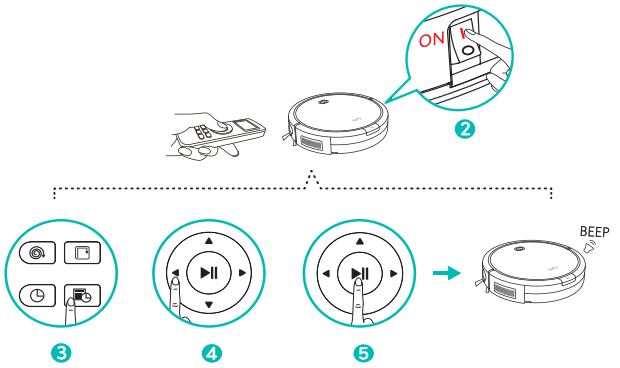

To ensure the schedule is set successfully, make sure RoboVac is turned on. You will hear a beep when the schedule has been set.

Cleaning and Maintenance

Clean the Dust Collector and Filters

1. Press the dust collector release button to pull the dust collector out.
2. Open and empty the dust collector.

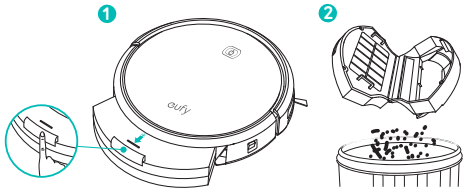

3. Separate the pre-filter by pulling the hooks as shown.
4. Take out the foam filter and high-performance filter.

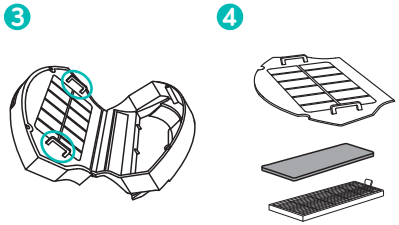

5. Clean the dust collector and filter with a vacuum cleaner or a cleaning brush.

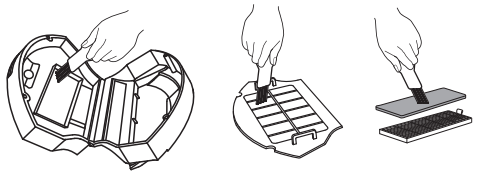

6. Put the filters back together in the dust collector.

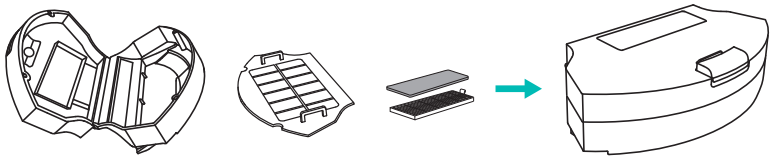

7. Push the dust collector back into the main unit.

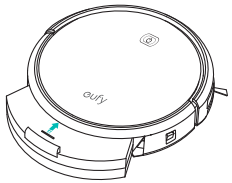

> - *It is recommended to empty the dust collector and clean the filter after every use.*
> - *You can wash the dust collector, pre-filter and foam filter with water. Be sure to air-dry them thoroughly before reassembling. Do not wash the high-performance filter with water, as it may damage the filter and reduce the suction power.*

Clean the Rolling Brush

1. Pull on the release tabs to unlock brush guard as shown.
2. Lift the rolling brush to remove.
3. Clean the rolling brush with the provided cleaning tool or a vacuum cleaner.
4. Reinstall the rolling brush by inserting the fixed protruding end first and then clicking into place.
5. Press down to snap the brush guard into place.

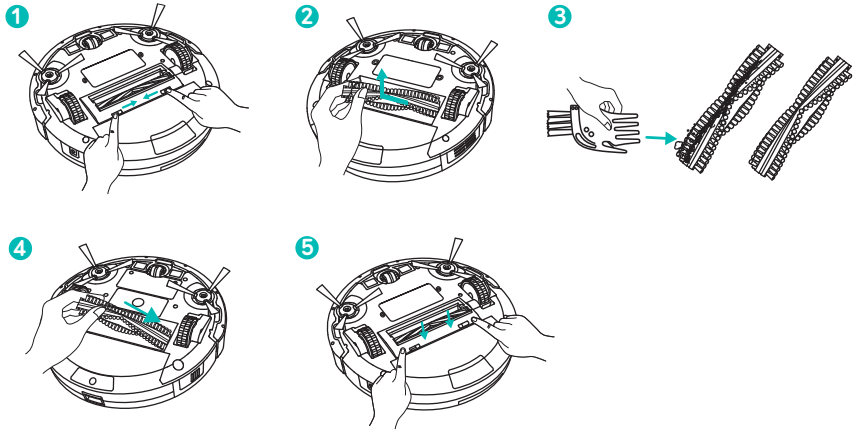

Clean the Sensors and Charging Pins

To maintain the best performance, clean the drop sensors and charging pins regularly.

- Dust off the drop sensors and charging contact pins using a cloth or cleaning brush.

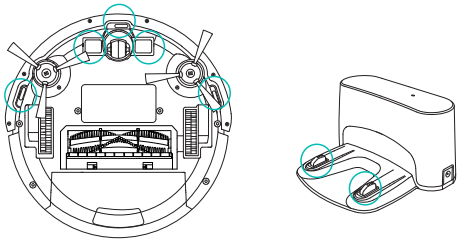

Clean the Side Brushes

Foreign substances, such as hair, can easily get tangled in the side brushes and dirt may adhere to them. Be sure to clean them regularly.

1. Carefully unwind and pull off any hair or string that is wrapped between the main unit and the side brushes.
2. Use a cloth dampened with warm water to remove dust from the brushes or to gently reshape them.

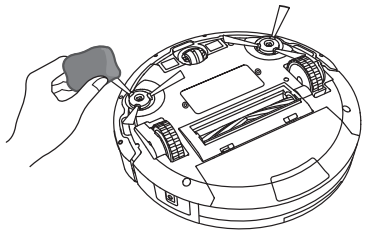

Only use the side brushes when they are completely dry.

Replace the Side Brushes

The side brushes may become bent or damaged after being used for a period of time. Follow the instructions below to replace them.

1. Use a screwdriver to unscrew the screws on the side brushes.
2. Pull off the old side brushes and snap the new ones into place.

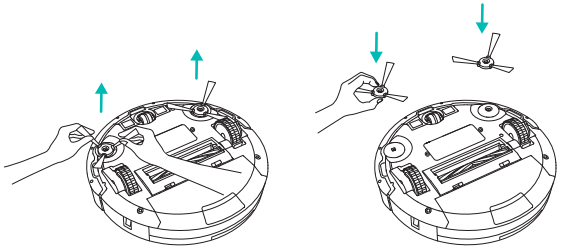

3. Screw down the screws to fasten the side brushes.

Troubleshooting

Problem	Solutions
RoboVac cannot be activated.	• Make sure the main power switch is in the ON position. • Make sure the battery is fully charged. • Replace the batteries (2 AAA) in the remote control. • Make sure the remote control is within range (less than 6 ft/2 m from RoboVac). • If you still have trouble, turn off the main power switch and then turn it back on.
The remote control does not work.	• Replace the batteries in the remote control. • Make sure RoboVac is turned on and fully charged. • If RoboVac and the remote control's display work properly, but RoboVac does not respond to the remote control's commands, it may be because the remote control has not been paired with RoboVac. In this case, do not dock RoboVac to the Charging Base. Turn off the main power switch and then: (1) press and hold ▶II on the remote control until the ⏲ icon blinks on the display; (2) turn on the main power switch. You will hear three beeps after successful pairing.
RoboVac stops working suddenly.	• Check if RoboVac is trapped or stuck on an obstacle. • Check if the battery level is too low. • If you still have trouble, turn off the main power switch, wait for 2 seconds, and then turn it back on.
RoboVac does not start scheduled cleaning.	• Make sure the main power switch on the side of RoboVac is turned on. • Make sure the time, time of day (AM/PM), and the scheduled time have been set correctly. • Check if RoboVac's power is too low to start cleaning.

Problem	Solutions
Suction power is weak.	• Check if any obstructions are blocking the suction inlet. • Empty the dust collector. • Clean the filter with a vacuum cleaner or a cleaning brush.
RoboVac cannot be charged.	• Check if the Charging Base is plugged into the outlet. • Dust off the charging contact pins with a dry cloth.
RoboVac cannot return to the charging base.	• Remove objects within 3 ft/1 m to the left and right side and within 6 ft/2 m of the front of the Charging Base. • When RoboVac is in the vicinity of the Charging Base, it will return more quickly. However, if the Charging Base is located far away, RoboVac will need more time to return. Please be patient as it works its way back.
The rolling brush does not rotate.	• Clean the rolling brush. • Check if the rolling brush and brush guard have been installed properly.
RoboVac's movements or travel path are abnormal.	• Clean the sensors carefully with a dry cloth. • Restart RoboVac by turning the power switch off and on.

Error Tone

When RoboVac is in trouble, it will emit a series of short or long beeps and the red indicator on RoboVac will be solid or flashing.

Flashing red indicator light

Error Tone	Cause	Solution
One beep	RoboVac's drop sensors are dirty.	Clean the drop sensors gently with a dry cloth.
Two beeps	RoboVac's power level is too low.	Charge RoboVac for at least 5 hours.
Three beeps	RoboVac is hanging over a ledge or is trapped.	Turn off RoboVac and restart in a new location.
Four beeps	RoboVac's suction fan is stuck.	• Turn off RoboVac, then remove and empty the dust collector. • Make sure the suction inlet is not blocked by any hair or debris.
Five beeps	RoboVac's infrared sensor on the bumper is dirty.	Clean the infrared sensor gently with a dry cloth.

Solid red indicator light

Error Tone	Cause	Solution
One beep	RoboVac's left/right wheel is stuck.	Turn off RoboVac and remove any hair or debris from the left/right wheel.
Two beeps	RoboVac's side brush is stuck.	Turn off RoboVac and remove any hair or debris from the side brush.

Error Tone	Cause	Solution
Three beeps	RoboVac's rolling brush is stuck.	Turn off RoboVac and remove any hair or debris from the rolling brush.
Four beeps	RoboVac's bumper is stuck.	Tap RoboVac's bumper several times to dislodge any debris that may be trapped underneath.

Specifications

Product Model	T2104
Input	19 V ⎓ 0.6 A
Battery Voltage	DC 14.4 V
Power Consumption	28 W
Battery Type	DC 14.4 V Li-ion 2500 mAh
Cleaning Time	Max. 100 mins
Charging Time	300 - 360 mins

Input	19 V ⎓ 0.6 A
Output	19 V ⎓ 0.6 A

Customer Service

- 12-Month Limited Warranty (additional statutory warranty remains unaffected)
- Lifetime Technical Support
- Email: support@eufylife.com
- Live chat: www.eufylife.com
- Customer service hotline:

(US) +1 (800) 988 7973 Mon-Fri 9:00am - 5:00pm (PT)	(中国) +86 400 0550 036 周一至周五 9:00 - 17:30
(UK) +44 (0) 1604 936200 Mon-Fri 6:00 - 11:00 (GMT)	(日本) +81 03 4455 7823 月–金 9:00 - 17:00
(DE) +49 (0) 69 9579 7960 Mon-Fri 6:00 - 11:00	

This limited warranty provided by the manufacturer does in no way affect a potential statutory warranty provided by law.

@EufyOfficial @EufyOfficial @EufyOfficial @EufyOfficial

Anker Innovations Limited
Room 1318-19, Hollywood Plaza, 610 Nathan Road, Mongkok, Kowloon, Hong Kong

Important Safety Instructions

To reduce the risk of injury or damage, read these safety instructions carefully and keep them at hand when setting up, using and maintaining this device.

WARNING SYMBOLS USED

This is the safety alert symbol. This symbol alerts you to potential hazards that could result in property damage and/or serious bodily harm or death.

- This device can be used by children aged from 8 years and above and persons with reduced physical, sensory or mental capabilities or lack of experience and knowledge if they have been given supervision or instruction concerning use of this device in a safe way and understand the hazards involved.
- Children should be supervised to ensure they do not play with this device.
- Cleaning and maintenance shall not be performed by children without adult supervision.
- This device is only to be used with the power supply unit provided.
- For the purposes of recharging the battery, only use the detachable power supply unit provided with this device.
- The battery must be removed from this device before this device is disposed of. To remove the battery from this device, first remove the screws on the bottom, then remove the main PCB and unscrew the battery cover using a screwdriver. Remove the battery by disconnecting the quick connector.
- The used battery should be placed in a sealed plastic bag and disposed of safely according to local environmental regulations.
- The external flexible cable or cord of the power supply unit cannot be replaced; if the cord is damaged, the power supply unit shall be disposed of.

- This device is for indoor use only.
- This device is not a toy. Do not sit or stand on this device. Small children and pets should be supervised when this device is operating.
- Store and operate this device in room temperature environments only.
- Clean with a cloth dampened with water only.
- Do not use this device to pick up anything that is burning or smoking.
- Do not use this device to pick up spills of bleach, paint, chemicals, or anything wet.
- Before using this device, pick up objects like clothing and loose paper. Lift up cords for blinds or curtains, and move power cords and fragile objects out of the way. If this device passes over a power cord and drags it, an object could be pulled off a table or shelf.
- If the room to be cleaned has a balcony, a physical barrier should be used to prevent access to the balcony and to ensure safe operation.
- Do not place anything on top of this device.
- Be aware that this device moves around on its own. Take care when walking in the area where this device is operating to avoid stepping on it.
- Do not operate this device in areas with exposed electrical outlets on the floor.
- Do not expose the electronics of this device, its battery, or the integrated Charging Base. There are no user-serviceable parts inside.
- Do not use this device on an unfinished, unsealed, waxed or rough floor. It may result in damage to the floor and this device. Use only on hard floor surfaces or low-pile carpet.
- This device has been designed to be used on floors without scratching them. We still recommend that you test this device on a small area of the room to be cleaned to ensure no scratches are made before cleaning the whole room.

Notice

The symbol on the product or its packaging indicates:

Do not dispose of electrical appliances as unsorted municipal waste, use separate collection facilities. Contact your local authority for information regarding the collection systems available. If electrical appliances are disposed of in landfills or dumps, hazardous substances can leak into the groundwater and get into the food chain, damaging your health and well-being. When replacing old appliances with new ones, the retailer is legally obliged to take back your old appliance for disposal at least free of charge.

FCC Statement

1. This device complies with Part 15 of the FCC Rules. Operation is subject to the following two conditions:

(1) This device may not cause harmful interference.

(2) This device must accept any interference received, including interference that may cause undesired operation.

2. Changes or modifications not expressly approved by the party responsible for compliance could void the user's authority to operate the equipment.

Note: This equipment has been tested and found to comply with the limits for a Class B digital device, pursuant to Part 15 of the FCC Rules. These limits are designed to provide reasonable protection against harmful interference in a residential installation.

This equipment generates, uses, and can radiate radio frequency energy and, if not installed and used in accordance with the instructions, may cause harmful interference to radio communications. However, there is no guarantee that interference will not occur in a particular installation. If this equipment does cause harmful interference to radio or television reception, which can be determined by turning the equipment off and on, the user is encouraged to try to correct the interference by one or more of the following measures: (1) Reorient or relocate the receiving antenna. (2) Increase the separation between the equipment and receiver. (3) Connect the equipment into an outlet on a circuit different from that to which the receiver is connected. (4) Consult the dealer or an experienced radio / TV technician for help.

FCC Radiation Exposure Statement

This equipment complies with FCC radiation exposure limits set forth for an uncontrolled environment. This equipment should be installed and operated with minimum distance 20cm between the radiator & your body.

Declaration of Conformity

This product complies with the radio interference requirements of the European Community. Hereby, Anker Innovations Limited declares that the radio equipment type T2104 is in compliance with Directive 2014/53/EU. The full text of the EU declaration of conformity is available at the following internet address: https://www.anker.com/products.

Maximum output power: 14 dBm

Frequency band: 2.4G band (2.4000GHz - 2.4835GHz)

IC Caution:

This device complies with Industry Canada licence-exempt RSS standard(s).

Operation is subject to the following two conditions: (1) This device may not cause interference, and (2) This device must accept any interference, including interference that may cause undesired operation of the device.

Consignes de Sécurité

Pour réduire le risque de blessures ou de dommages, lisez attentivement ces consignes de sécurité et gardez-les en main lors de la mise en place, de l'utilisation et de l'entretien de cet appareil.

SYMBOLES D'AVERTISSEMENT UTILISÉS

This is the safety alert symbol. This symbol alerts you to potential hazards that could result in property damage and/or serious bodily harm or death.

- Cet appareil peut être utilisé par des enfants de huit ans et plus, des personnes ayant des handicaps physiques, sensoriels ou mentaux, ou un manque d'expérience et de connaissances, à condition qu'ils soient supervisés ou aient été informés de la manière d'utiliser l'appareil en toute sécurité.
- Ne pas laisser les enfants jouer avec l'appareil.
- L'entretien de l'appareil ne doit pas être effectué par un enfant sans supervision.
- L'appareil ne doit être utilisé qu'avec l'unité d'alimentation électrique fournie avec celui-ci.
- N'utiliser que l'unité d'alimentation fournie avec l'appareil pour en recharger la batterie.
- La batterie doit être retirée de l'appareil avant que celui-ci soit mis au rebut. Pour retirer la batterie, dévisser le couvercle de la batterie à l'aide d'un tournevis. Retirer la batterie en débranchant le connecteur rapide.
- La batterie usagée doit être mise dans un sac hermétique et mise au rebut conformément aux régulations locales en vigueur.
- Le câble de l'alimentation ne peut être remplacé. S'il est endommagé, l'unité d'alimentation ne pourra plus être utilisée.
- Cet appareil est réservé à une utilisation en intérieur.
- Cet appareil n'est pas un jouet. Ne pas s'asseoir ou se tenir debout dessus. Les petits enfants et les animaux domestiques doivent être

surveillés lorsque cet appareil est en marche.
- Conserver et utiliser cet appareil uniquement dans des environnements à température ambiante.
- Ne nettoyer qu'avec un chiffon imbibé d'eau.
- Ne pas utiliser cet appareil pour ramasser quoi que ce soit qui brûle ou fume.
- Ne pas utiliser cet appareil pour nettoyer des flaques d'eau de Javel, de peinture, d'autres produits chimiques ou de quoi que ce soit d'humide.
- Avant d'utiliser cet appareil, ramasser vêtements et papiers, soulever les cordons des stores ou rideaux et mettre les câbles d'alimentation et les objets fragiles hors de portée. Si l'appareil passe par-dessus un câble et l'entraîne avec lui, cela risque de causer des chutes d'objets.
- Si la pièce à nettoyer a un balcon, une barrière physique doit être placée afin d'empêcher l'accès au balcon et d'assurer une utilisation sûre.
- Ne pas placer d'objet sur l'appareil.
- Rester conscient que l'appareil se déplace seul. Faire attention à ne pas marcher sur l'appareil par inadvertance.
- Ne pas utiliser dans des endroits disposant de prises de courant exposées sur le sol.
- Ne pas exposer les composants électroniques de cet appareil, de sa batterie, ou de la station de recharge intégrée. Il n'y a pas de pièces réparables par l'utilisateur.
- Ne pas utiliser sur un sol inachevé, non scellé, ciré ou accidenté au risque d'endommager le sol ou l'appareil. Utiliser uniquement sur des surfaces dures ou sur des tapis à poils courts.
- Cet appareil a été conçu pour être utilisé sur les sols sans les abîmer. Nous vous recommandons tout de même de tester l'appareil sur une petite zone pour vérifier l'absence d'éraflures.

Avertissements

Ce symbole sur l'appareil ou son emballage indique :

Ne jetez pas les appareils électriques comme des déchets municipaux non triés ; utilisez des installations de collecte séparées. Contactez les autorités locales pour plus d'informations concernant les systèmes de collecte disponibles. Si des appareils électriques sont jetés dans des décharges, des substances dangereuses peuvent s'infiltrer dans les eaux souterraines et entrer dans la chaîne alimentaire, endommageant ainsi votre santé et votre bien-être. Lors du remplacement de vieux appareils par de nouveaux, le détaillant est légalement obligé de reprendre son ancien appareil pour le mettre au rebut gratuitement.

Déclaration de la FCC

1. Cet appareil est conforme à la partie 15 des règles de la FCC. L'opération est soumise aux deux conditions suivantes :

(1) Cet appareil ne doit pas provoquer d'interférences nuisibles.

(2) Cet appareil doit accepter toute interférence reçue, y compris les interférences susceptibles de provoquer un fonctionnement indésirable.

2. Les changements ou modifications non expressément approuvés par la partie responsable de la conformité peuvent annuler l'autorité de l'utilisateur à utiliser l'équipement.

REMARQUE : Cet équipement a été testé et déclaré conforme aux limites d'un appareil numérique de classe B, conformément à la partie 15 des règles de la FCC. Ces limites sont conçues pour fournir une protection raisonnable contre les interférences nuisibles dans une installation résidentielle.

Cet équipement génère, utilise et peut émettre de l'énergie radiofréquence et, s'il n'est pas installé et utilisé conformément aux instructions, peut causer des interférences nuisibles aux communications radio. Cependant, il n'y a aucune garantie que des

interférences ne se produiront pas dans une installation particulière. Si cet équipement cause des interférences nuisibles à la réception radio ou télévision, ce qui peut être déterminé en éteignant et en rallumant l'équipement, l'utilisateur est encouragé à essayer de corriger l'interférence par une ou plusieurs des mesures suivantes :

Réorienter ou déplacer l'antenne de réception.

Augmenter la distance entre l'équipement et le récepteur.

Connecter l'équipement à une prise sur un circuit différent de celui auquel le récepteur est connecté.

Consulter le revendeur ou un technicien radio / TV expérimenté pour obtenir de l'aide.

Déclaration d'exposition aux radiations de la FCC

Cet équipement est conforme aux limites d'exposition aux radiations de la FCC définies pour un environnement non contrôlé. Cet équipement doit être installé et utilisé avec une distance minimale de 20 cm entre le radiateur et votre corps.

Déclaration de conformité

Puissance de sortie maximale : 14 dBm

Bande de fréquence : bande 2,4G (2,4000 GHz - 2,4835 GHz)

RSS-Gen Issue 4 December 2014""&""CNR-Gen 4e Décembre 2014:

Le présent appareil est conforme aux CNR d'Industrie Canada applicables aux appareils radio exempts de licence. L'exploitation est autorisée aux deux conditions suivantes:

(1) l'appareil ne doit pas produire de brouillage, et

(2) l'utilisateur de l'appareil doit accepter tout brouillage radio électrique subi, même si le rouillage est susceptible d'en compromettre le fonctionnement.

T2104
51005001012 V02